Cost-effective Rollover Protective Structure (CROPS)

for Wheeled Agricultural Tractors

FORD 8N SERIES

INSTALLATION INSTRUCTIONS

Note: “Left” and “Right” refer to the tractor operators’ left or right as they sit in the seat looking forward.

DEPARTMENT OF HEALTH AND HUMAN SERVICES
Centers for Disease Control and Prevention
National Institute for Occupational Safety and Health

This document is in the public domain and may be freely copied or reprinted.

Disclaimer

Mention of any company or product does not constitute endorsement by the National Institute for Occupational Safety and Health (NIOSH). In addition, citations to Web sites external to NIOSH do not constitute NIOSH endorsement of the sponsoring organizations or their programs or products. Furthermore, NIOSH is not responsible for the content of these Web sites. All Web addresses referenced in this document were accessible as of the publication date.

Ordering Information

To receive documents or other information about occupational safety and health topics, contact NIOSH at

Telephone: 1–800–CDC–INFO (1–800–232–4636)
TTY: 1–888–232–6348
E-mail: cdcinfo@cdc.gov

or visit the NIOSH Web site at www.cdc.gov/niosh.

For a monthly update on news at NIOSH, subscribe to NIOSH eNews by visiting www.cdc.gov/niosh/eNews.

SAFER • HEALTHIER • PEOPLE™

CROPS
Ford 8N
Parts

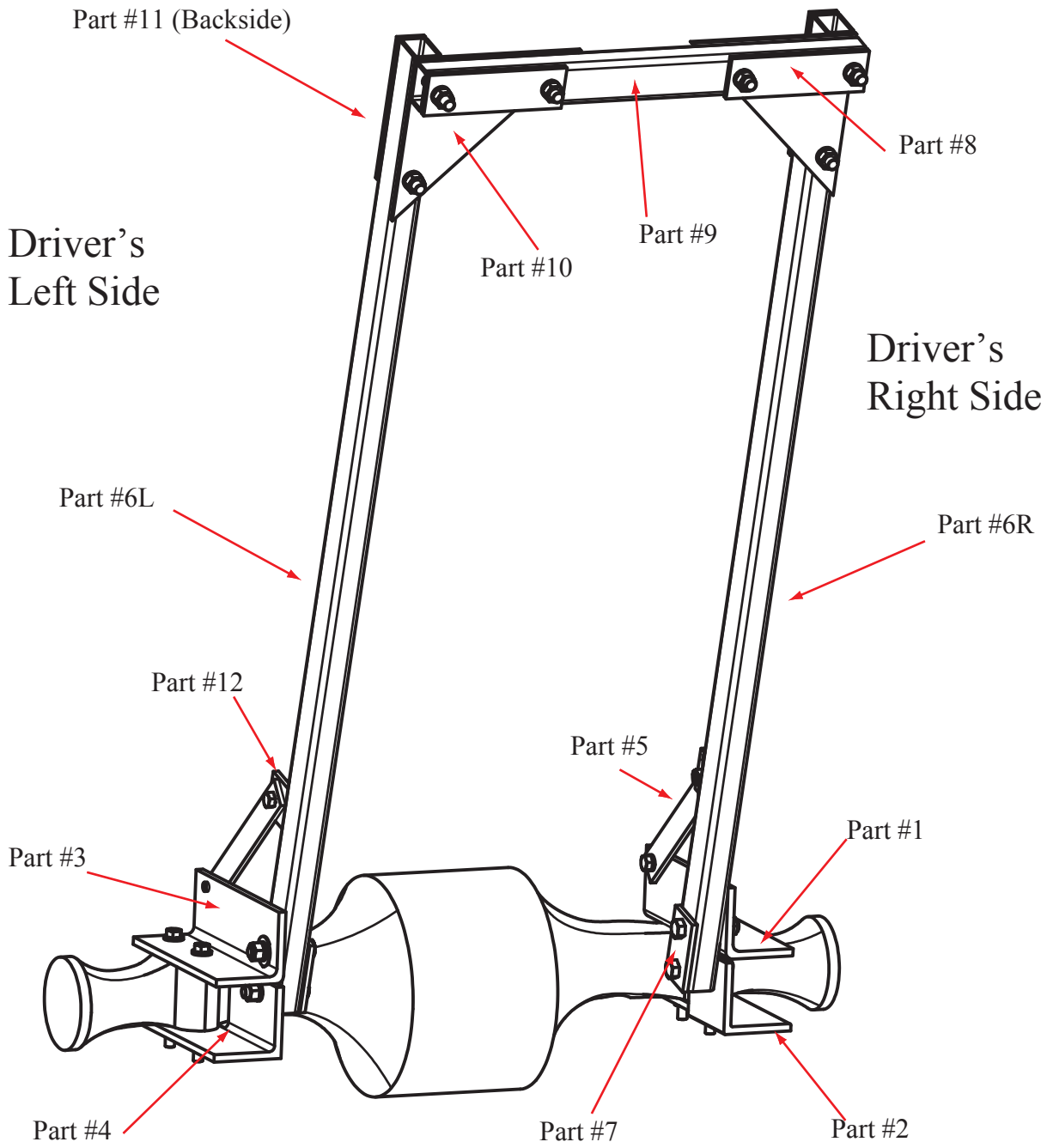

CROPS
Ford 8N
Fasteners

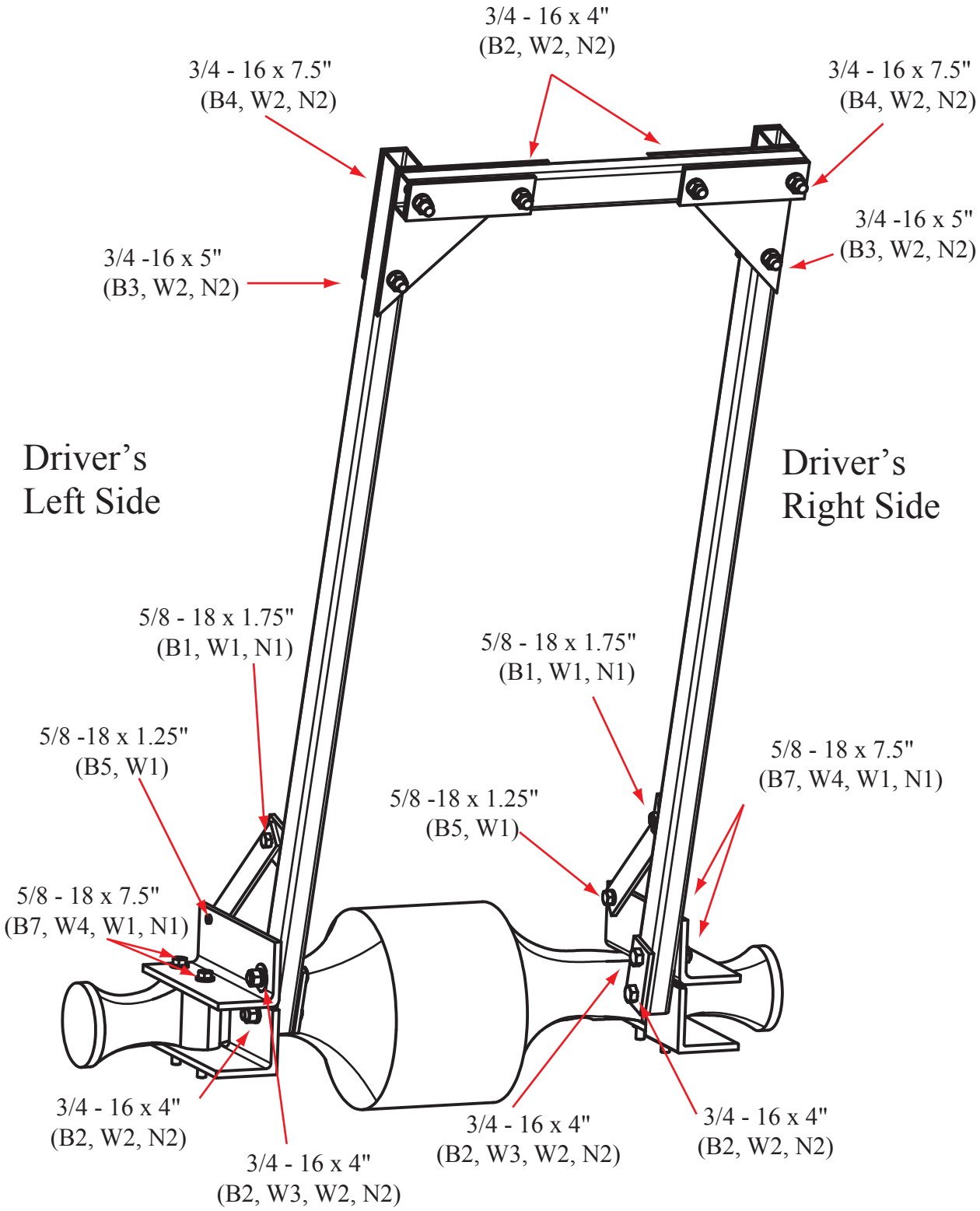

Special Notes

a. Check that all parts are present before assembling the unit.

b. Separate parts into groups for easier identification during assembly.

c. For large parts, you may need another person to help you with assembly. Before installing the CROPS, the fenders of the tractor must be removed from the axles, and the axles should be brushed clean.

d. Install the seat belt attachment kit using the provided instructions.

Tools Needed

tape measure

½″ drive standard socket set with sockets up to 1-1/8″

½″ drive deep well sockets 15/16″ and 1-1/8″

open/box combination wrench set up to 1-1/8″

½″ drive torque wrench with a 240 ft-lb capacity

wire hand brush

hammer

small step stool

eye protection

CROPS
Ford 8N
Parts List

CROPS Parts

Item #	Quantity	Description
1	1	top right axle bracket
2	1	bottom right axle bracket
3	1	top left axle bracket
4	1	bottom left axle bracket
5	2	vertical tube bolted brace
6R	1	right vertical tube
6L	1	left vertical tube
7	2	bottom vertical tube backing plate
8	2	cross bar backing plate
9	1	cross bar
10	2	corner plate
11	2	top vertical tube backing plate
12	2	vertical tube welded brace

CROPS Fasteners

Bolts						
Item #	**Quantity**	**Grade**	**Diameter**	**Thread**	**Length**	**Thread Length**
B1	2	8	5/8	18	1.75	full thread
B2	6	5	3/4	16	4	partial thread
B3	2	5	3/4	16	5	partial thread
B4	2	5	3/4	16	7.5	partial thread
B5	2	8	5/8	18	1.25	full thread
B7	4	8	5/8	18	7.5	partial thread

Washers				
Item #	**Quantity**	**Type**	**ID**	**OD**
W1	8	locking	5/8	-
W2	10	locking	3/4	-
W3	2	flat	3/4	2
W4	4	flat	5/8	1-5/16

Nuts				
Item #	**Quantity**	**Grade**	**ID**	**Thread**
N1	6	8	5/8	18
N2	10	5	3/4	16

CROPS
Ford 8N
Parts List (continued)

Seat Belt Parts

Item #	Quantity	Type	Grade	Comment
SB1	1	nylon	appropriate	seat belt
CH1	2	coated	30	6-link chain
13SBB	1			seat belt bracket
End Caps	6	plastic	2 in x 3 in	

Seat Belt Fasteners

Bolts						
Item #	**Quantity**	**Grade**	**Diameter**	**Thread**	**Length**	**Comment**
B9	2	5	5/16	18	1.5	full thread
B10	2	5	7/16	14	1.5	full thread
B11	2	5	7/16	14	4	partial thread

Washers			
Item #	**Quantity**	**Type**	**ID**
W6	2	locking	5/16
W7	2	locking	7/16
W8	6	flat	7/16
W9	2	flat	5/16

Nuts				
Item #	**Quantity**	**Grade**	**ID**	**Thread**
N3	2	5	5/16	18
N4	2	5	7/16	14

CROPS
Ford 8N
Steps 1–3

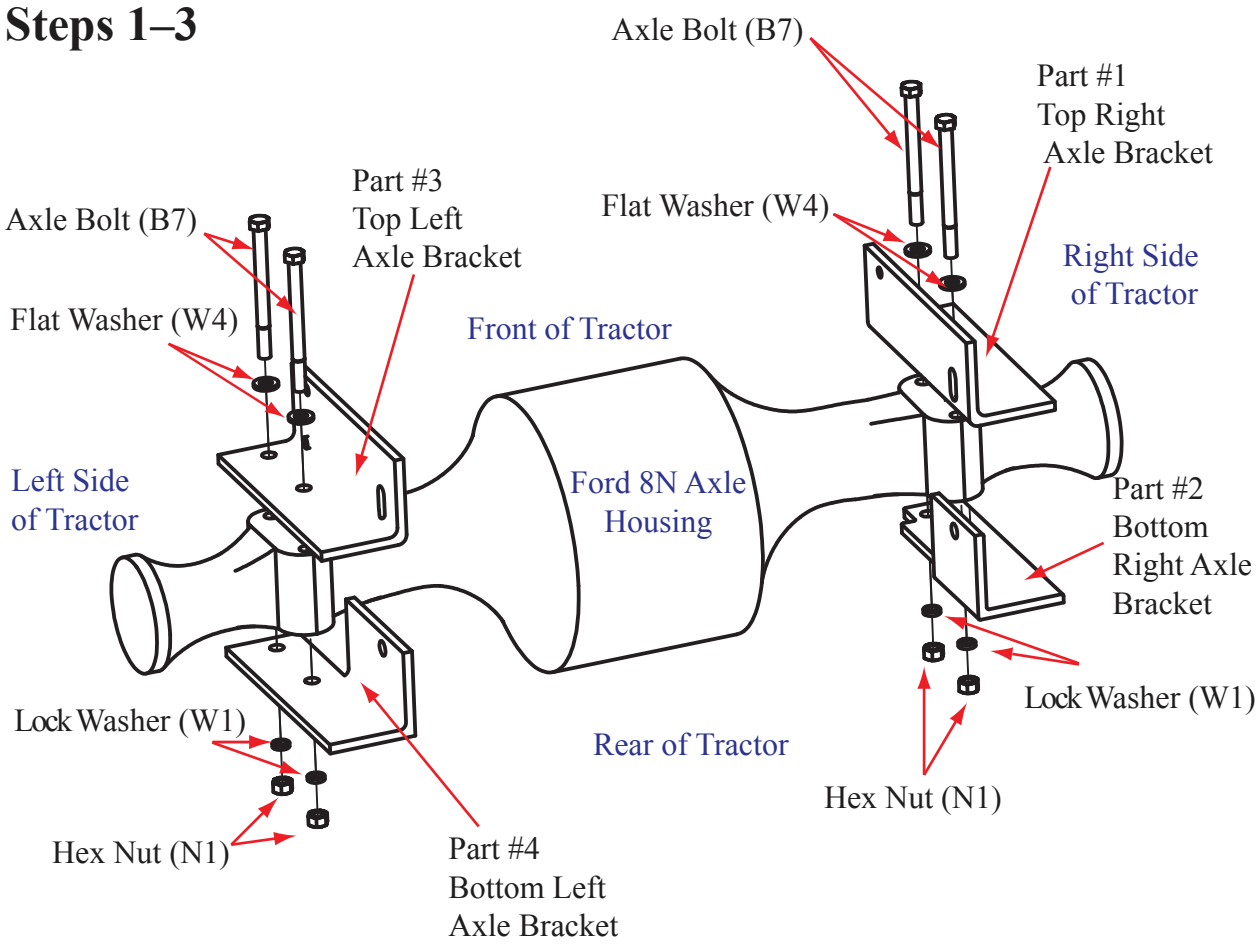

Figure 1

Step 1. Read the "special notes" section on page 5. Place the top right axle bracket (#1) on top of the right axle. Place the fender (not shown) on top of the axle bracket (#1). Align the holes in the fender base and axle bracket with the two holes of the tractor axle. Slide a flat washer (W4) onto two bolts (B7). Insert axle bolts (B7) down through the fender base and axle bracket holes and then through the holes of the tractor axle. (Figure 1)

Step 2. Align and install the bottom right axle bracket (#2) to the bottom of the tractor axle using the two-hole bolt pattern of the axle bracket and the two bolts inserted in step 1. If needed for a draw bar link, install a bottom right lower link support bracket to axle bolts (B7) and the bottom surface of axle bracket (#2) (not shown). Install lock washers (W1) and nuts (N1) to axle bolts (B7). Tighten bolts and nuts until axle brackets are "snug tight" to axle. (Figure1)

Step 3. Repeat steps 1 and 2 for the left tractor axle using top left axle bracket (#3), bottom left axle bracket (#4), corresponding axle bolts (B7), flat washers (W4), lock washers (W1), and nuts (N1).

CROPS
Ford 8N
Steps 4–7

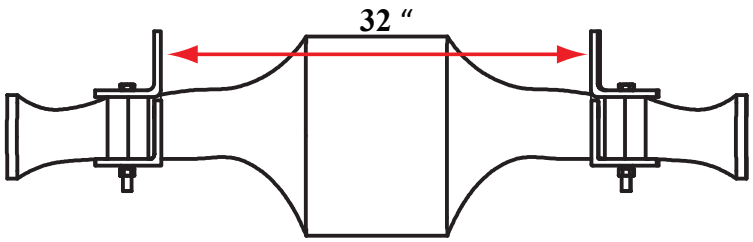

Figure 2

Step 4. Adjust (with hammer taps if needed) left and right axle brackets so that the inside measurement of the axle brackets is 32 inches. (Figure 2)

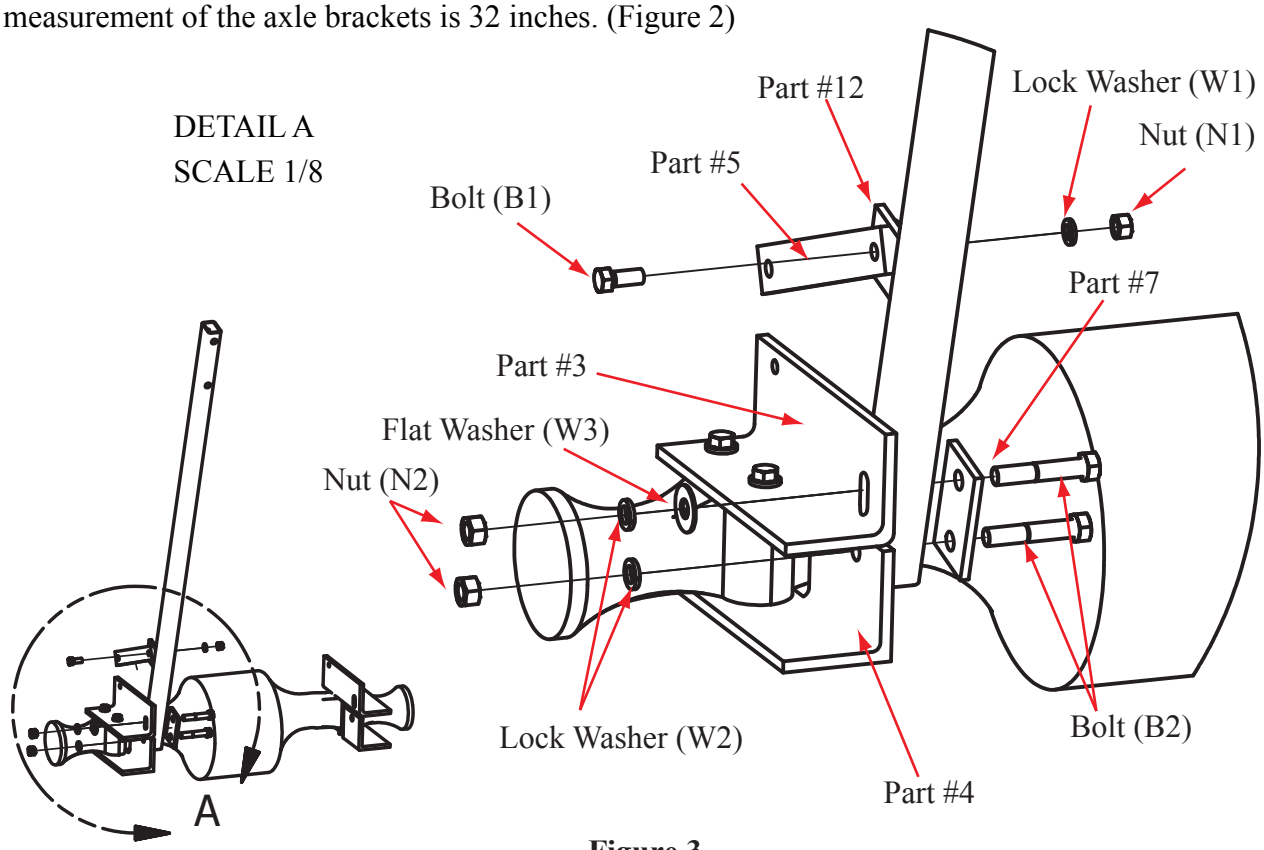

Figure 3

Step 5. Attach a vertical tube bolted brace (#5) to the vertical tube welded brace (#12) of the left vertical tube (#6L) using a bolt (B1), a lock washer (W1), and a nut (N1). Tighten to a snug fit. (Figure 3)

Step 6. Insert bolt (B2) through backing plate (#7), through the bottom holes of the left vertical tube (#6L), and through the hole on the bottom left axle bracket (#4). Secure with lock washer (W2) and nut (N2) to create a snug fit. The vertical tube welded brace (#12) [welded to part #6L] and bolted brace (#5) should be facing up and toward the axle bracket side as shown in Figure 3.

Step 7. Rotate the vertical tube (#6L) toward the front of the tractor. Insert bolt (B2) through backing plate (#7), the corresponding holes in the vertical tube (#6L), and the slotted opening in the left top axle bracket (#3). Slide the flat washer (W3) onto bolt (B2) and secure with lock washer (W2) and nut (N2) to create a snug fit. (Figure 3)

CROPS
Ford 8N
Steps 8–10

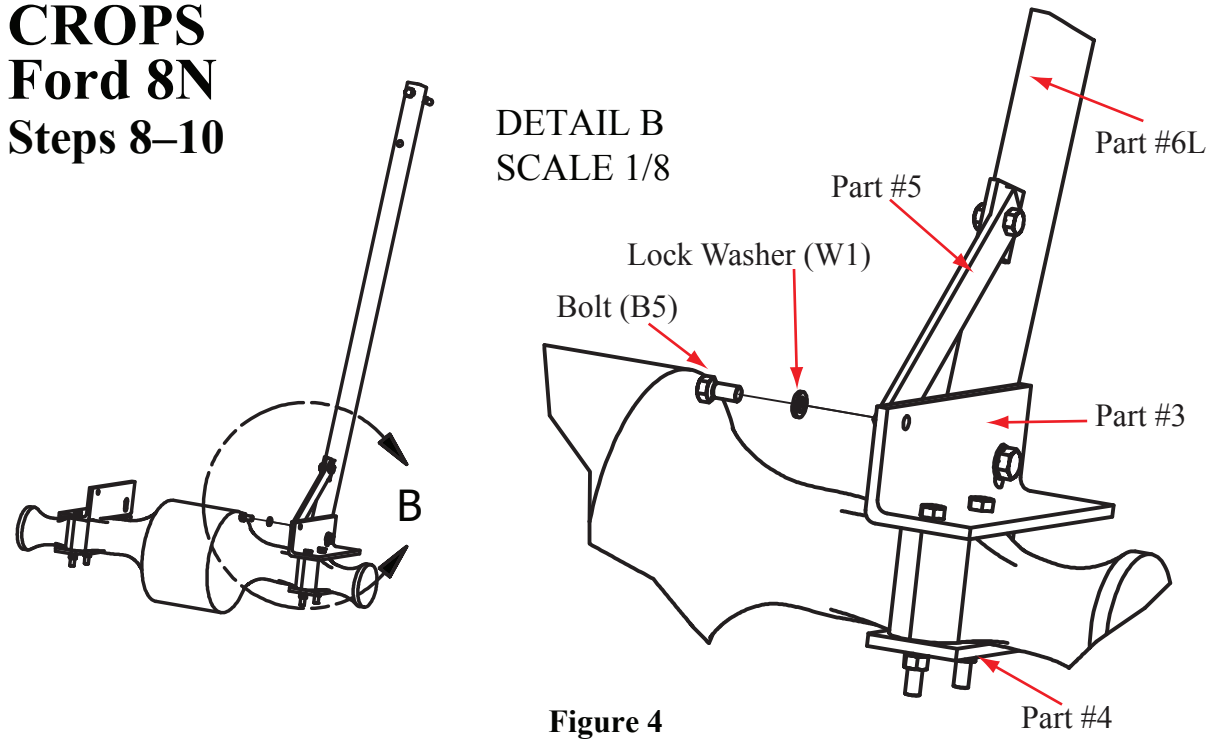

Figure 4

Step 8. Attach vertical tube bolted brace (#5) to the top left axle bracket (#3) with bolt (B5) and lock washer (W1). Tighten to a snug fit. (Figure 4)

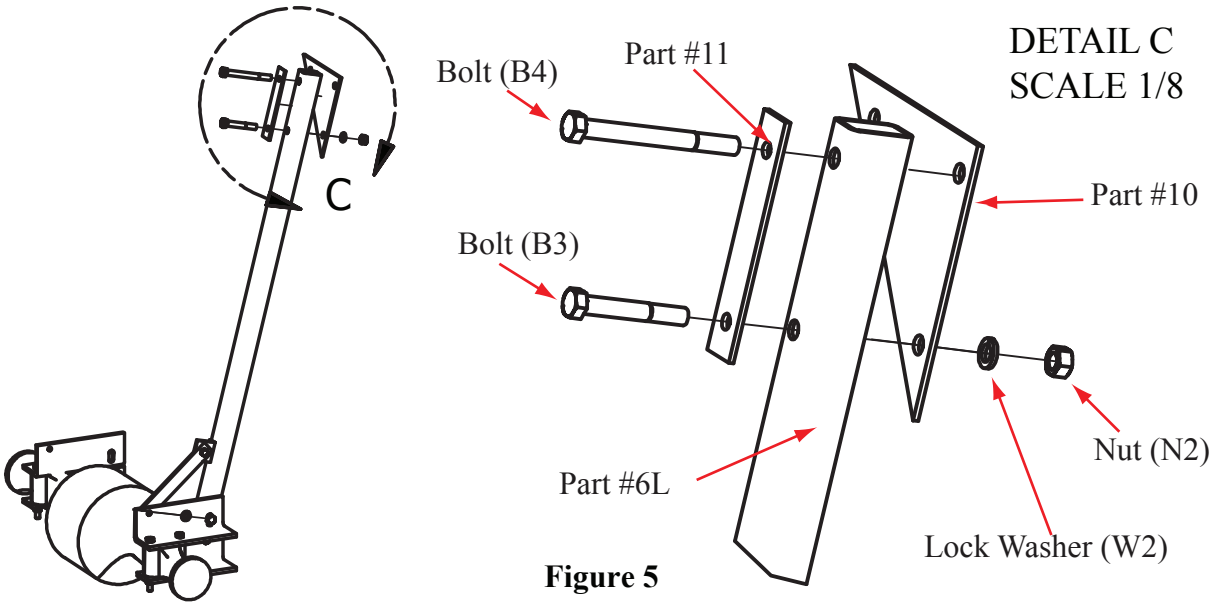

Figure 5

Step 9. Install corner plate (#10) by aligning the bottom and corner holes of the corner plate with the top two holes on the left vertical tube (#6L). Insert bolt (B3) through the top vertical tube backing backing plate (#11), then through the lower hole in the vertical tube (#6L) and the bottom hole of the corner plate. Place lock washer (W2) and nut (N2) onto bolt (B3) and secure a snug fit. (Figure 5)

Step 10. Insert bolt (B4) through the top hole of the top vertical tube backing plate (#11), the top holes of the vertical tube (#6L), and the corner hole of the corner plate. (Figure 5)

CROPS
Ford 8N
Steps 11–13

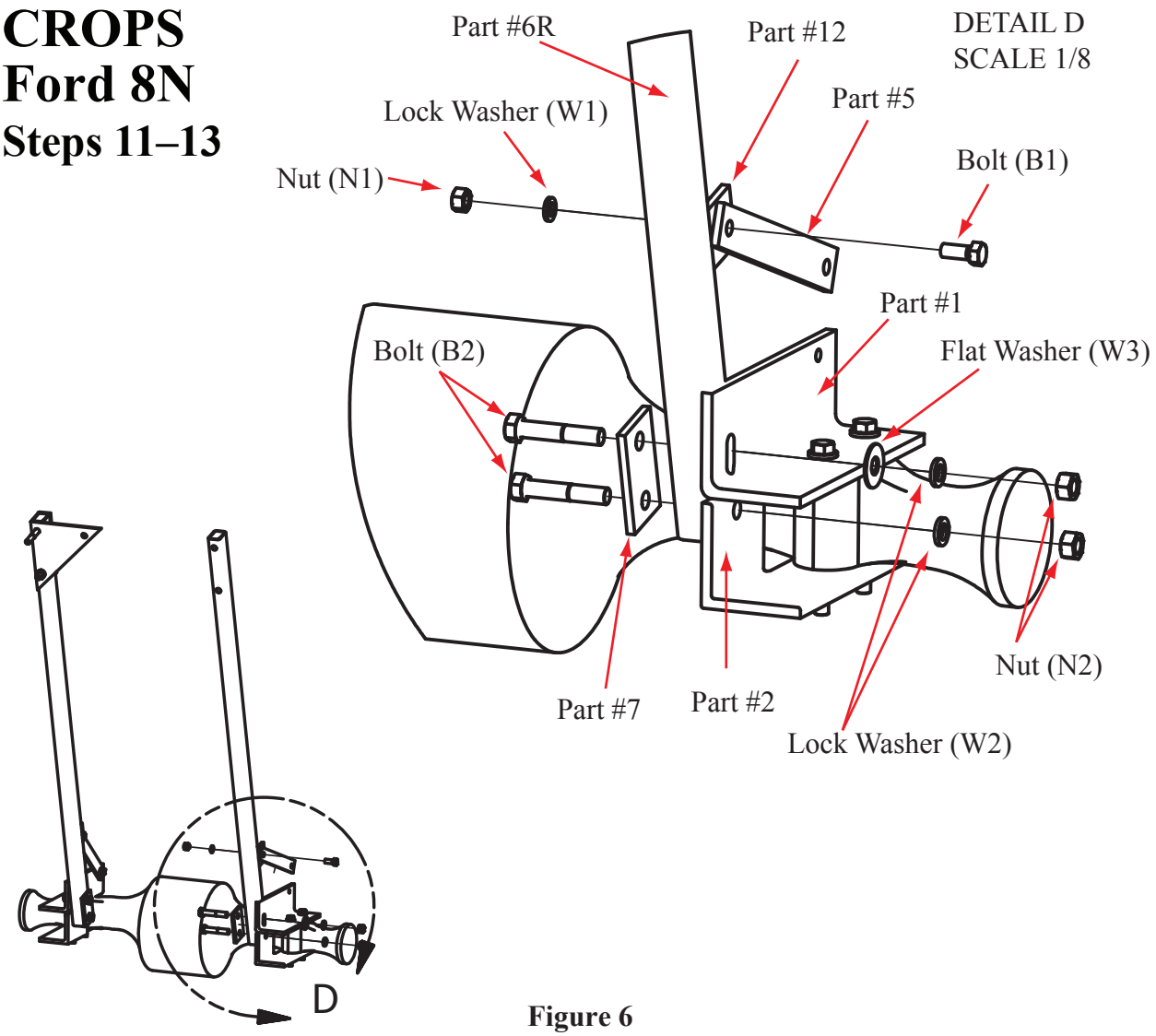

Figure 6

Step 11. Attach a vertical tube bolted brace (#5) to the vertical tube welded brace (#12) of the right vertical tube (#6R) using a bolt (B1), a lock washer (W1), and a nut (N1). Tighten to a snug fit. (Figure 6)

Step 12. Insert bolt (B2) through the bottom vertical tube backing plate (#7). Slide the bottom holes of the right vertical tube (#6R) onto bolt (B2), then slide bolt (B2) through the hole on the bottom right axle bracket (#2). Secure with lock washer (W2) and nut (N2) to create a snug fit. The vertical tube welded brace (#12) (welded to part #6R) and bolted brace (#5) should be facing up and toward the axle bracket side as shown in Figure 6.

Step 13. Rotate the vertical tube (#6R) toward the front of the tractor. Insert bolt (B2) through backing plate (#7), and the corresponding holes in the right vertical tube (#6R), and the slotted opening in the top right axle bracket (#1). Slide the flat washer (W3) onto bolt (B2) and secure with lock washer (W2) and nut (N2) to create a snug fit. (Figure 6)

CROPS
Ford 8N
Steps 14–16

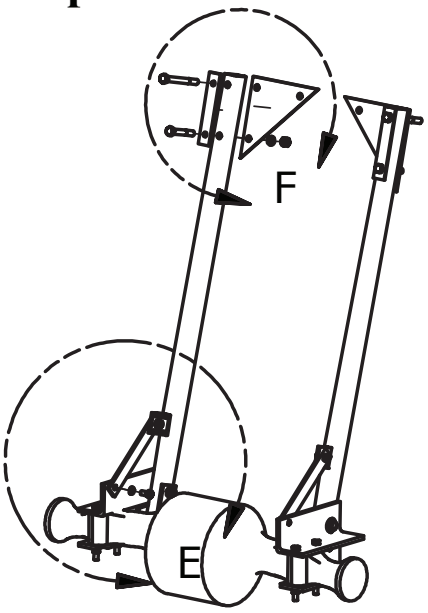

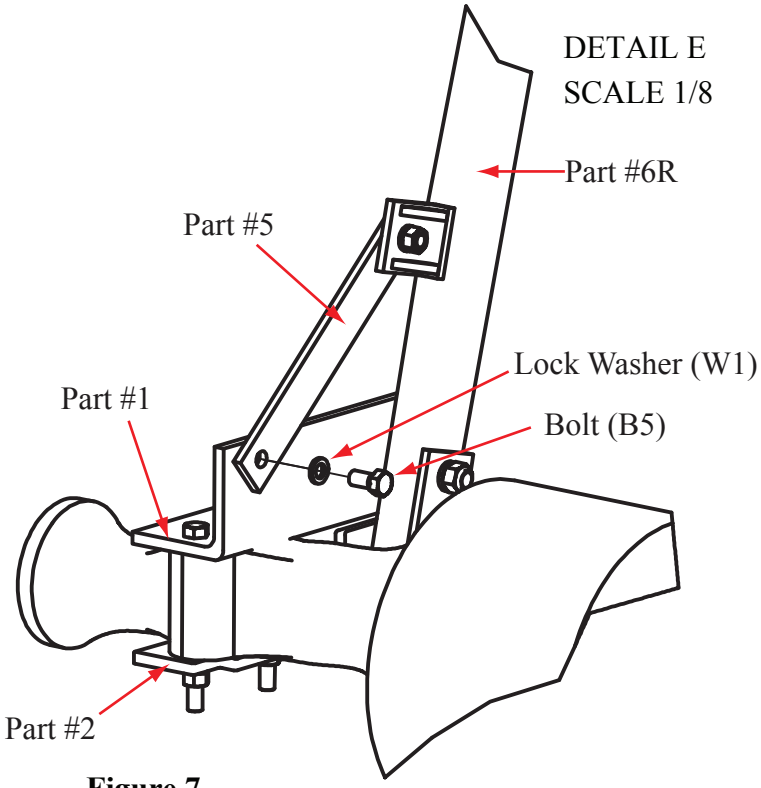

Figure 7

Step 14. Bolt vertical tube bolted brace (#5) to the top right axle bracket (#1) with bolt (B5) and lock washer (W1). Tighten to a snug fit. (Figure 7)

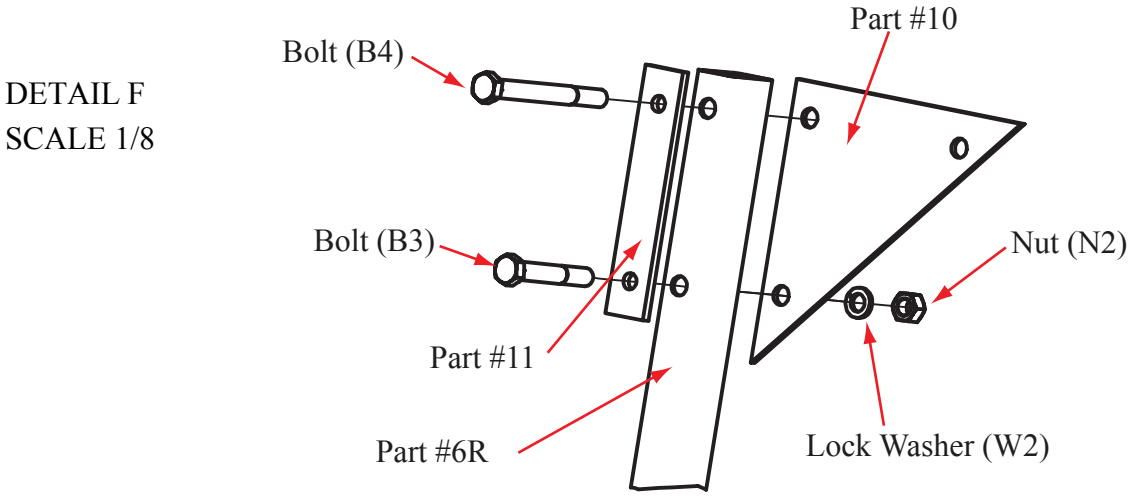

Figure 8

Step 15. Install the corner plate (#10) by aligning the bottom and corner holes of the corner plate with the top two holes on the right vertical tube (#6R). Insert bolt (B3) through the top vertical tube backing plate (#11), then through the lower holes in the right vertical tube (#6R) and the bottom hole of the corner plate. Place lock washer (W2) and nut (N2) onto bolt (B3) and secure a snug fit. (Figure 8)

Step 16. Insert bolt (B4) through the top hole of the top vertical tube backing plate (#11), the top holes of vertical tube (#6R), and the corner hole of the corner plate. (Figure 8)

CROPS
Ford 8N
Steps 17–19

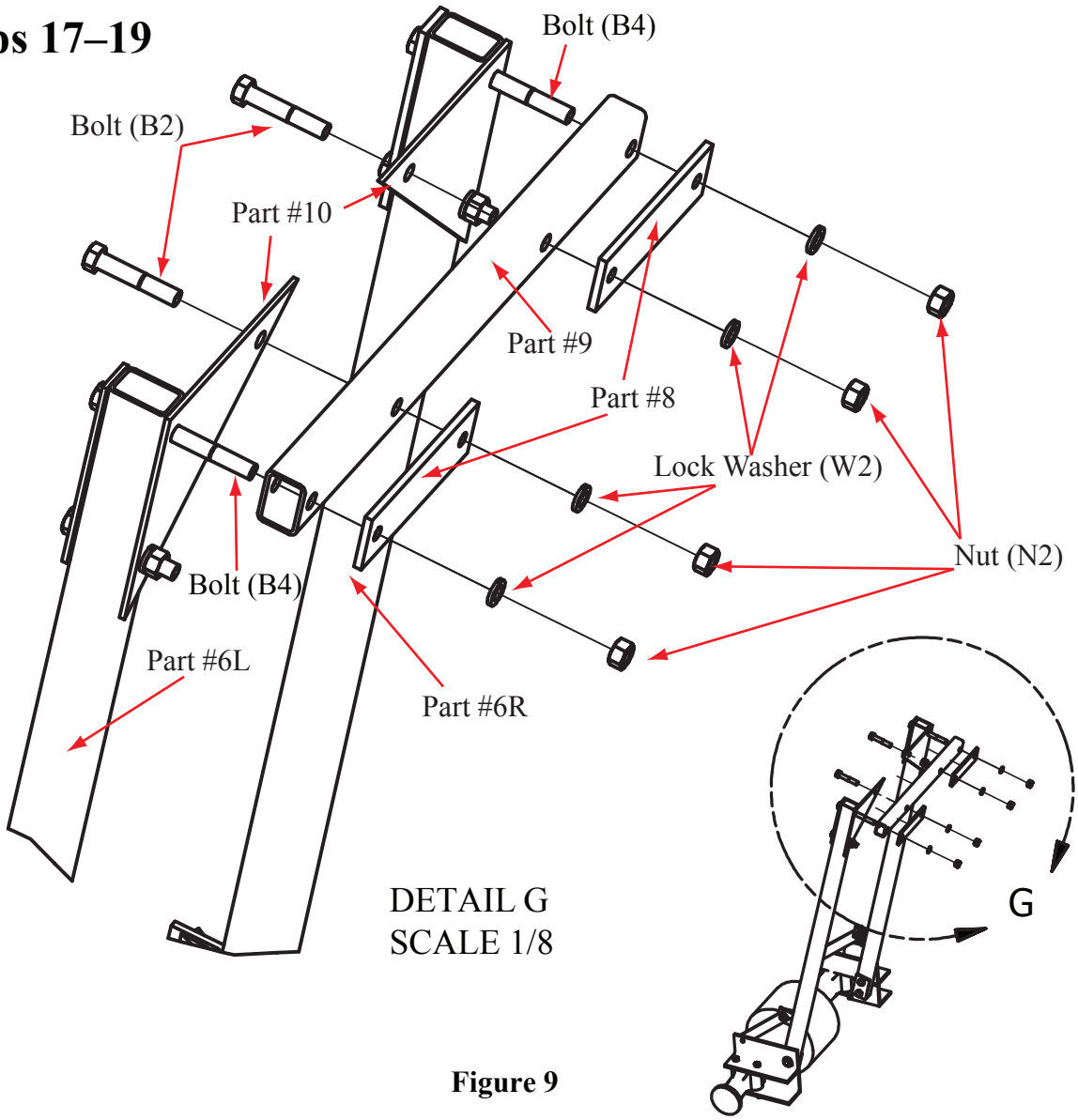

Figure 9

Step 17. Attach the cross bar (#9) on the left vertical tube (#6L) by inserting the bolt (B4) through the outside holes on the cross bar (#9) and the cross bar backing plate (#8). Secure a loose fit with lock washer (W2) and nut (N2).

Step 18. Rotate the cross bar (#9) toward the right vertical tube (#6R) and insert bolt (B4) through the outside holes of cross bar (#9) and the cross bar backing plate (#8). Secure a loose fit with lock washer (W2) and nut (N2).

Step 19. Insert bolts (B2) through the remaining inside holes of the corner plates (#10), the cross bar (#9), and the cross bar backing plate (#8). Create a snug fit with a lock washer (W2) and a nut (N2). Snug the connections made in steps 17 and 18. (Figure 9)

CROPS
Ford 8N
Steps 20 – 24

Step 20. Torque bolt (B5) in step 8 and step 14 to a MAXIMUM torque of 180 ft-lbs.

In order to correctly install the CROPS you MUST use the incremental tightening steps 21 – 23 listed below.

Incremental tightening of all remaining bolted connections from a snug fit to a maximum torque of 240 ft-lbs.

In steps 21–23, always start the torquing process with the axle bolts (B7), then proceed in a circular direction, returning to axle bolts (B7) to start the next torque increment.

Step 21. Torque all bolted connections to 80 ft-lbs.

Step 22. Torque all bolted connections to 180 ft-lbs.

Step 23. Torque all bolted connections to 240 ft-lbs.

Step 24. Install the seat belt attachment kit as instructed in the **Seat Belt Assembly Instructions**.

Failure to install and use the seat belt will reduce the effectiveness of the CROPS. As with a ROPS, the CROPS can only provide adequate protection due to an overturn if the operator is properly using the seat belt with the CROPS properly installed.

Congratulations on the installation of your CROPS!
Think and work safely!

Seat Belt Assembly
Ford 8N
Steps 1–3

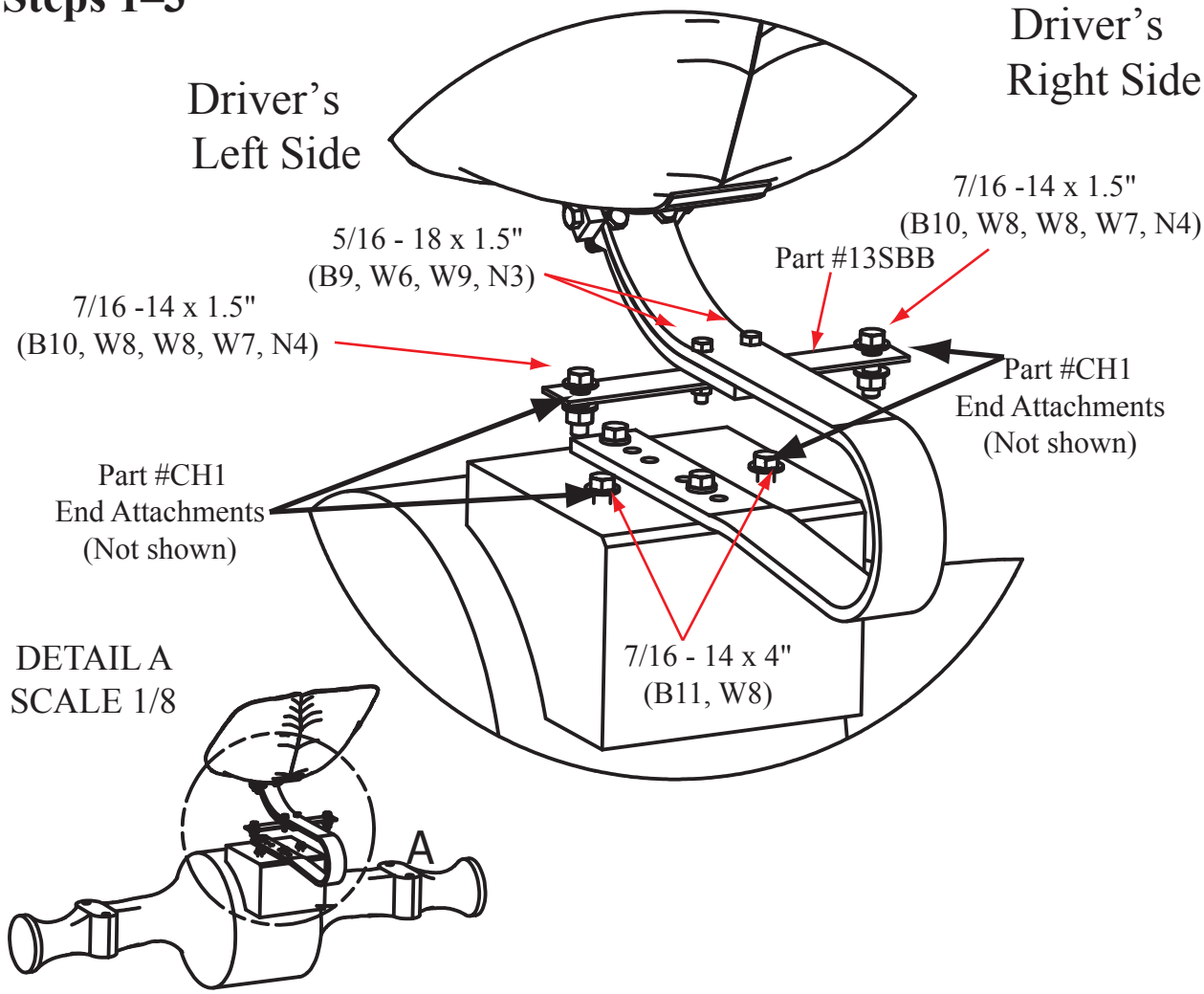

Step 1. Remove the bottom set of two carriage bolts from the leaf spring/pan seat frame.

Step 2. Install the steel belt bracket (#13SBB) to the under side of the leaf spring by inserting two provided bolts (B9) down through the holes of the leaf spring and through the center holes in the steel belt bracket (#13SBB). Install lock washers (W6, then W9) and nuts (N3) to bolts and tighten.

Step 3. Place a flat washer (W8) on a bolt (B10). Next, place the flat steel base of the seat belt (male connection side, not shown) on the same bolt. Install the bolt down through the ½-inch hole on the right side of the steel belt bracket (#13SBB). Then, from the under side of the steel belt bracket, install the end link of a length of chain (#CH1) to the bolt (B10). Place a flatwasher (W8), lock washer (W7), and nut (N4) on the bolt and "snug tight" the connection.

Seat Belt Assembly
Ford 8N
Steps 4–7

Step 4. Repeat step 3 for the left side side of the seat belt, keeping the release button "up" on the seat belt buckle with no twist to the seat belt strap.

Step 5. Right side: Unscrew and remove the front hex head 7/16" x 3 ¾" bolt of the lift arm base. Next, place a flat washer (W8) on the provided bolt (B11). Then install this bolt through the other end link of the left side chain (#CH1). Screw this bolt into the hole of the lift arm base, making a "snug tight" fit to the connection.

Step 6. Repeat step 5 to the left side of the seat belt assembly.

Step 7. Position and adjust the hang of the chain, and tighten all bolts.

Congratulations on the installation of your tractor seat belt!
Think and work safely!

National Institute for Occupational Safety and Health

NIOSH

Delivering on the Nation's promise:
Safety and health at work for all people
through research and prevention

To receive documents or other information about occupational safety and health topics, contact NIOSH at

Telephone: 1-800-CDC-INFO (1-800-232-4636)
TTY: 1-888-232-6348
E-mail: cdcinfo@cdc.gov

or visit the NIOSH Web site at www.cdc.gov/niosh.

For a monthly update on news at NIOSH, subscribe to NIOSH eNews by visiting www.cdc.gov/niosh/eNews.

SAFER • HEALTHIER • PEOPLE™