National Institute for Occupational Safety and Health (NIOSH)
National Personal Protective Technology Laboratory (NPPTL)
Conformity Verification and Standards Development Branch (CV&SDB)

The Standard Application Procedure for the Approval of Supplied-Air Respirators, Industrial Self-Contained Breathing Apparatus, and Combination Supplied-Air Respirators/Industrial Self-Contained Breathing Apparatus Under 42 CFR Part 84

Revised: March 12, 2018

Table of Contents

Introduction 4

Section 1 General Information for Supplied-Air Respirators and Combination SAR/SCBA 5

1.1 Getting Started 5

1.1.1 Who May Apply 5

1.1.2 Approval 5

1.1.3 Applicants Without a Three-character Manufacturer's Code 5

1.1.4 Applicants Without NIOSH Approval 5

1.1.5 Where to Find the Standard Application Form 6

1.1.6 Submitting the Application 6

1.1.7 Documents to Submit with the Application 6

1.1.8 Submitting the Application and Associated Documents 6

1.1.9 Submitting Test Samples (Hardware) 6

1.2 Types of Applications 7

1.2.1 New Approval Application 7

1.2.2 Extension of Approval Application 8

1.2.3 Quality Assurance Approval Application 11

1.2.4 Resubmission Application 11

1.2.5 Amended Application 12

1.2.6 Correlation Testing Only Application 12

1.3 Approval Label Protections and Cautions and Limitations for SARs and Combination SAR/SCBA 13

Section 2 Specific Instructions for Preparing a SAR and Combination SAR/SCBA Application 14

Section 3 Supplemental Information for Preparing an Application 23

3.1 Quality Assurance Documentation 23

3.2 Quality Assurance Manual 23

3.3 Product Quality Control Plan and Documentation 24

3.4 Fees 25

3.5 Supplied-Air Respirator and Combination SAR/SCBA Test Fees 26

3.6 Annual (Fixed) Certification Fees 27

3.7 Pay.Gov Instructions 29

3.8 Drawings for a Supplied-Air Respirator and a Combination SAR/SCBA 31

3.8.1 Exploded-View and Major Subassembly Drawing for a SAR and a Combination SAR/SCBA 31

3.8.2 Example of an Exploded-View Drawing for a SAR and Combination SAR/SCBA 31

3.8.3 Major Subassembly Drawings for a SAR 32

3.8.4 Material Specifications on Drawings for a SAR and Combination SAR/SCBA 32

3.9 Component Vendors 32
3.10 Assembly Matrix 32
3.11 Approval Labels and Private Labels 34
3.12 List of NIOSH Cautions and Limitations for a SAR and a Combination SAR/SCBA 34
3.13 Private Labeling Versus Private Packaging 35
3.14 User Instructions 36
3.15 Packaging Art Work and Carton Design 37
3.16 Summary of Related Documents 38
3.17 File Naming Conventions 39
Section 4 Approvals and Denials 41
4.1 Approval Documentation 41
4.2 Denial Documentation 41
4.3 Denial Prior to Assignment of a Task Number 41
4.4 Denial of a Project Undergoing NIOSH Evaluation 42
4.5 Respirator Certification (Approval) Program Decision Review Process 42
Section 5 Supplied-Air Respirator Test Selection Guide 43
Section 6 Supplied-Air Respirator and Combination SAR/SCBA Checklists 52
6.1 NIOSH Respirator Application Checklist 52
6.2 Exploded-View Drawing Checklist for a Supplied-Air and Combination Supplied-Air/SCBA 54
6.3 All Major Subassemblies Checklist for a Supplied-Air Respirator and Combination SAR/SCBA 55
6.4 Supplied-Air Respirator 56
6.5 Self-Contained Breathing Apparatus 57
6.6 Self-Contained Breathing Apparatus 58
6.7 Private Label Checklist for a Supplied-Air Respirator and Combination SAR/SCBA Checklist 59
6.8 Document Examples for Supplied-Air Respirators and Combination SAR/SCBA 60
Section 7 - Documents Examples for a Supplied-Air Respirator 61
7.1 Example Supplied-Air Respirator Product Quality Plan 61
7.2 Example Product Quality Plan for Self-Contained Breathing Apparatus Respirators 62
7.3 Example of an Exploded-View Drawing for a Supplied-Air Respirator 62
7.4 Example of an Exploded-View Drawing for a Full Facepiece Combination SAR/SCBA 64
7.5 Example Assembly Matrix Combination SAR and SCBA Respirators 65
7.6 Example of an Approval Label for a Supplied-Air Respirator with Egress SCBA 66
7.7 Example of an Approval Label for a Supplied-Air Respirator 67
Section 8 - Label Format Guidance 68
Appendix 69
Definitions 80
Acronyms 880

Introduction

This document is a revision to the NIOSH *Standard Application Procedure for the Approval of Respirators* dated August 2015. It is intended to add clarity to the approval process under Title 42, *Code of Federal Regulations* (CFR) Part 84 (also known as 42 CFR 84). It is recommended that applicants review the entire document before submitting a respirator for approval.

This Standard Application Procedure (SAP) correlates with version 8 of the Standard Application Form (SAF).

NPPTL has developed individual instructions for each class of respirator. The information in this document pertain to the approval of Supplied-Air Respirators (SAR), Industrial Self-Contained Breathing Apparatus (SCBA), and Combination Supplied-Air Respirator and Industrial Self-Contained Breathing Apparatus (SAR/SCBA). Please see the appropriate application for the respirator being submitted.

Schedule 13F

- **Self-Contained Breathing Apparatus for Entry or Escape, Demand or Pressure-Demand, Open-Circuit or Closed-Circuit;**
- **Combination Supplied-Air Respirator and Escape Only Self-Contained Breathing Apparatus; and**
- **Combination Supplied-Air Respirator and Self-Contained Breathing Apparatus.**

Schedule 19C

- **Supplied-Air Respirators.**

Compliance with all instructions is essential for efficient processing of an application.

The information in Section 2 of this document provides specific step-by-step instructions to prepare an application for a **Self-Contained Breathing Apparatus for Entry or Escape, Demand or Pressure-Demand, Open-Circuit or Closed-Circuit, Combination Supplied-Air Respirator and Escape-Only Self-Contained Breathing Apparatus, Combination Supplied-Air Respirator and Self-Contained Breathing Apparatus, or Supplied-Air Respirator**. The paragraphs are numbered to correspond with the sections of version 8 of the standard application form (SAF).

Additional guidance and information related to SARs is included in the sections that follow and should be used as reference.

Section 1 General Information for Supplied-Air Respirators and Combination Supplied-Air Respirators-Self-Contained Breathing Apparatus

Instructions Specific for Preparing an Application for a Supplied-Air Respirator (19C and 13F Approvals).

This guide applies strictly to Supplied-Air Respirators and Combination Supplied-Air Respirators and Self-Contained Breathing Apparatus. Please see the appropriate application and instructions for submitting an application for a different class of respirator.

1.1 Getting Started

1.1.1 Who May Apply

An individual, partnership, company, corporation, association, or other organization that designs, manufactures, assembles, or controls the assembly of a respirator may apply to NIOSH to become an approval holder (42 CFR Section 84.2). An organization may appoint an authorized representative to complete and submit the Standard Application Form (SAF) to NIOSH.

1.1.2 Approval

Approval is issued once NIOSH determines the product conforms to the requirements of 42 CFR Part 84.

1.1.3 Applicants Without a Three-character Manufacturer's Code

A prospective approval holder that has not applied for a NIOSH-Assigned three-character manufacturer's code will need to complete the Prospective Approval Holder Form and return it to the NIOSH NPPTL Records Room. To obtain the form, contact the NIOSH NPPTL Records Room at recordsroom@cdc.gov or (412) 386-4000.

1.1.4 Applicants Without NIOSH Approval

Prospective approval holders, without a NIOSH-Approved respirator, who have received a three-character manufacturer's code, may submit an initial application for a single new respirator along with a signed and approved company Quality Assurance (QA) Manual.

For prospective approval holders, once the application is accepted, reviewed, the respirator is tested, and a final review is successfully performed, a site qualification visit will be scheduled and conducted prior to the issuance of any approval. Please see the fee schedules for the cost of the site qualification visit. Other applications may be submitted with the initial application. However, subsequent applications will not be reviewed until the site qualification is completed and the initial application is approved.

The site qualification is only performed for new applicants (those without a NIOSH approval). Approval holders with joint NIOSH and Mine and Safety Health Administration (MSHA) approval have routine site audits conducted annually. NIOSH performs routine site audits for all approval holders every two years.

1.1.5 Where to Find the Standard Application Form

The standard application form, version 7 can be downloaded from the NIOSH NPPTL website. SAF versions 8 and 9 may be requested from the NPPTL Records Room once the manufacturer's code is issued.

1.1.6 Submitting the Application

Applications should be submitted on CD-R or DVD-R electronic media. Neither rewritable CDs **nor** thumb drives will be accepted. Due to computer security policies, NIOSH cannot accept thumb drives. Only one application per CD-R or DVD-R will be accepted. CD-Rs and DVD-Rs will be destroyed once the project is closed, unless a prepaid shipping label is sent with the media.

Compressed or "zip" files are recommended for applications submitted via email. Applicants that choose to email the attachments to NIOSH at recordsroom@cdc.gov risk having the information stripped by mail routers.

1.1.7 Documents to Submit with the Application

Checklists specific to the type of application being completed are included in Section 6. Fee schedules are included in Section 3. Tests required for SAR and Combination SAR/SCBA respirators are included in Section 5. Documents must be named in accordance with the prescribed naming convention, using an acceptable software package.

1.1.8 Submitting the Application and Associated Documents

The CD-R or DVD-R with the completed application form and associated documents, including the application fee check or pay.gov receipt, must be sent to:

NIOSH NPPTL
CV&SDB, Records Room
626 Cochrans Mill Road
Pittsburgh, PA 15236

1.1.9 Submitting Test Samples (Hardware)

NIOSH NPPTL
CV&SDB, Evaluation and Testing
626 Cochrans Mill Road
Pittsburgh, PA 15236

All boxes containing test samples (hardware) must be marked with the AAR# and include a packing slip.

Test samples (hardware) submitted for a series of applications must be identified for each project for which it is to be used. For example, a facepiece that is to be used on three projects must have all three

Applicant-Assigned Reference Numbers (AAR#s) on the packaging. If there are multiple containers, each container must be labeled with all the appropriate information.

All sample components must be identified and labeled with their corresponding part numbers as listed on the assembly matrix.

If test samples (hardware) is being sent to NIOSH for the testing of multiple projects, please include this information in the first application where testing will be performed and label the test samples (hardware) package with each AAR#.

1.2 Types of Applications

The types of applications include: New Approval Application, Extension of Approval Application, Quality Assurance Approval Application, Amended Application, and Correlation Testing Only Application, Resubmission of New Approval Application, and Resubmission of an Extension of Approval Application.

If there is any doubt about the appropriate type of application to submit, call the NIOSH NPPTL *Conformity Verification and Standards Development Branch (CV&SDB) at (412) 386-4000.*

Several screens in the Standard Application Form for New Approval Applications and Extensions of Approval Applications identify the data fields that are being entered directly into the NIOSH Certified Equipment List (CEL). The product description should be short and succinct for an accurate reporting of the respirator in the CEL.

1.2.1 New Approval Application

- Used for new design, substantially different design, or different type or level of protection requested for an existing NIOSH-Approved respirator.
- NIOSH assigns a new testing and certification (TC) number for each new respirator system design that is approved.
- An application may be submitted for only **one** basic new respirator design per application.
- Applications containing more than one design will be denied.
    - If an applicant submits a new respirator with two new facepieces, for example, a half-mask and full facepiece that use the same air-supply assembly, NIOSH requires two separate applications resulting in two new approvals because each facepiece represents a separate design and level of protection.

New Approval Applications must contain or reference the following items as described in detail in Sections 2 and 3 of this SAP.

- NIOSH Standard Application Form.
- Pretest Data.
- Simplified Drawings.
- Assembly Matrix.
- Draft Approval Label(s).

- Quality Assurance Manual (Manual to be submitted separately as a QA Application after first approval).
- Product Quality Control Plan.
  - Classification of Defects Document.
  - Sampling Plan.
- Application Fee, $200.
- User Instructions.
- Test Samples (Hardware).

1.2.2 Extension of Approval Application

Submitted when:

- A critical or major characteristic affecting performance is altered on a previously approved respirator.
- A critical or major characteristic affecting design (including quality assurance provisions) is altered on a previously approved respirator.
- A new accessory is added to a previously approved respirator.
- A change is made to an approval label, assembly matrix, User Instructions, or drawings.
- All TC numbers affected must be listed in the "Reason for Application."
- All the TC numbers on a given assembly matrix apply to the extension. The assembly matrix may be referenced in lieu of listing the individual TC numbers.
- A product is made obsolete.
- The approval holder wants to add multiple accessories to one previously approved respirator.

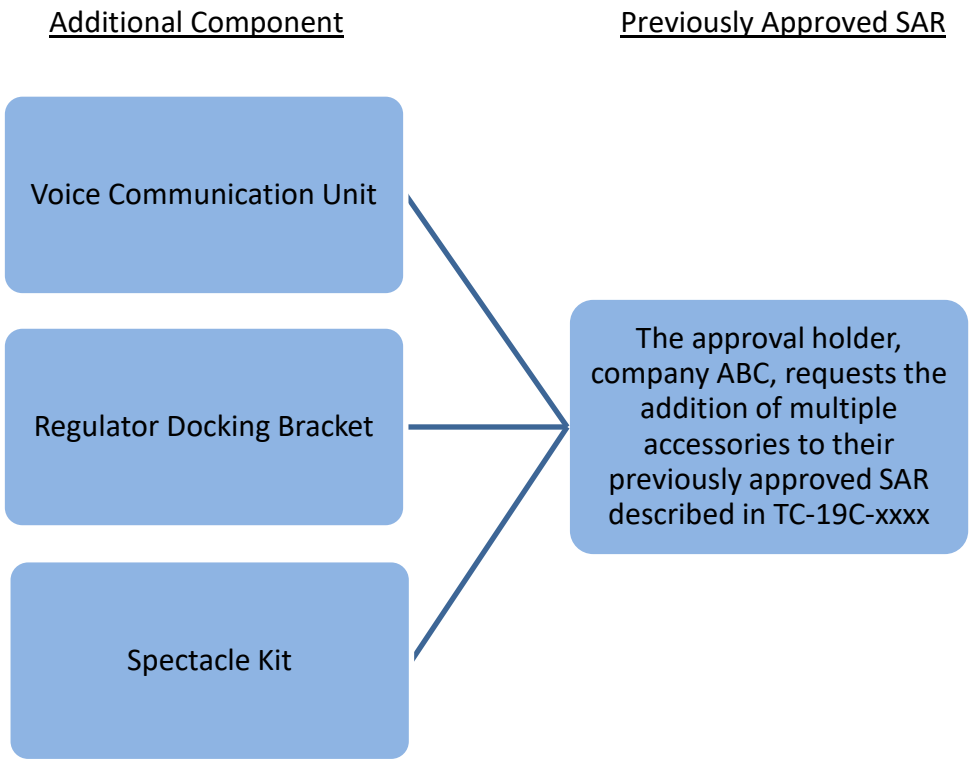

- An approval holder requests the addition of an accessory to multiple previously approved respirators.

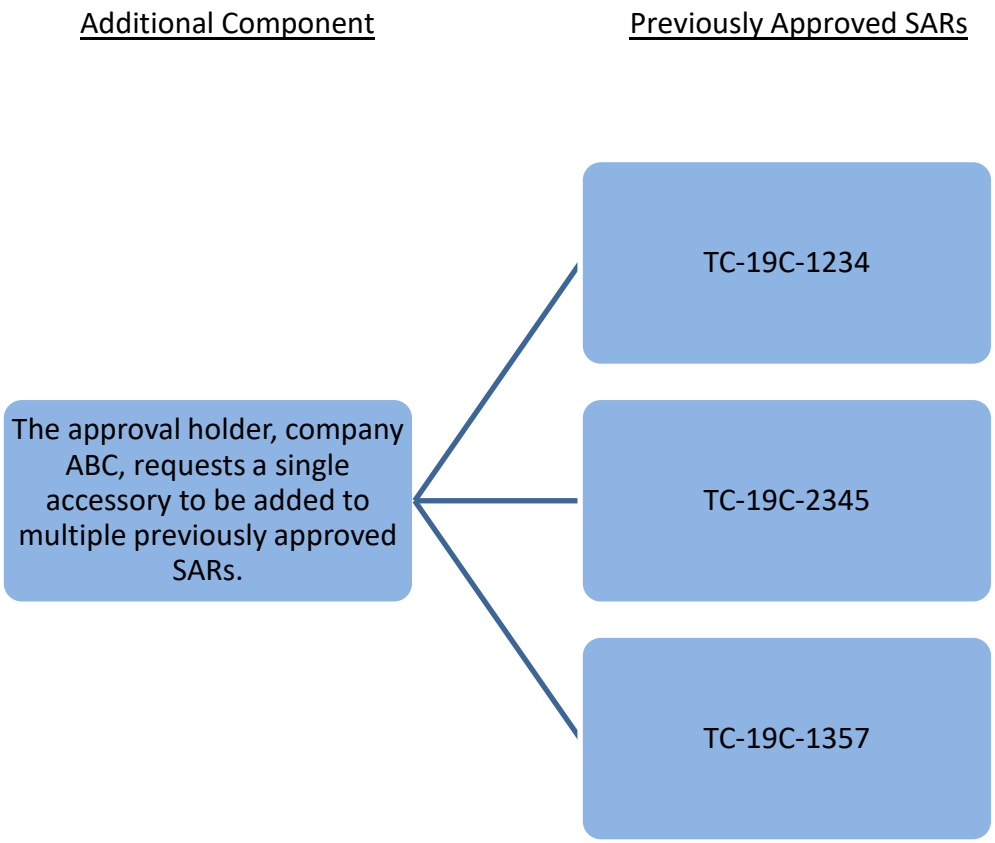

Changes to minor characteristics not affecting performance or design, which are not documented in the NIOSH approval records, do not have to be submitted to NIOSH. A minor characteristic is an attribute such as a typographical error in a drawing. Approval holders are responsible for keeping all changes to minor characteristics on file and available for review at the request of NIOSH.

This includes any minor changes to any document that is part of the approval record. These changes should be submitted for an extension of approval at your earliest convenience. NOTE: Documents not up-to-date in the NIOSH record could be identified during a site audit and result in a non-conformance.

If the type or level of protection changes, a New Approval Application must be submitted. For example, a Supplied-Air Respirator with a flow regulator may be submitted and approved. A subsequent submission of the same mask with a different flow regulator would be considered to be a new 'Type,' requiring a New Approval Application and a different TC number being issued.

In addition, a New Approval Application is required and a different TC number will be issued for additions of a new respirator arrangement to a respirator family, model, or series such as a new full facepiece model.

Extension of Approval Applications must contain the following items or reference as described in detail in Sections 2 and 3 of this SAP.

- NIOSH Standard Application Form.
- Pretest Data.
- Simplified Drawings.

- Assembly Matrix.
- Draft Approval Label(s).
- Product Quality Control Plan.
    - Classification of Defects Document.
    - Sampling Plan.
- Application Fee, $200.
- User Instructions.
- Test Samples (Hardware).

In the "Reason for Application": Describe exactly and completely the change(s) or addition(s) to the approved respirator(s) and how the change(s) will affect the previously approved respirator(s). Provide a succinct description on the previously approved respirator(s). For example, "An Extension of Approval to allow our 'xyz' alternate airline hose to be used as an alternate to our 'abc' hose on our half-mask Supplied-Air Respirators, models 123, 456, and 789. No other components are affected. This request is for use of an alternate airline hose only." The Extension of Approval Application must clearly indicate:

1. The affected respirator(s) by name, TC number, and part number. If multiple approvals are affected, the assembly matrix or matrices that contain these approvals may be listed in lieu of the TC numbers.
2. Complete details of the change(s) or addition(s).
3. Related documentation that has changed since the last approval (assembly matrix, inspection procedures, simplified drawings, draft approval label, product quality control plan, User Instruction).

<u>Example of a Well-Written Reason for Extension of Approval Application</u>:

Provides the model number, TC number, type of respirator, and what is being requested in a very descriptive manner. In this example, the request to allow an alternate breathing tube, and the details are provided.

This Extension of Approval Application is for our EZLine Supplied-Air Respirator family to allow an alternate breathing tube. This breathing tube, part number 12345, will be an alternate breathing tube for all approvals listed on the EZLine assembly matrix (EZLineAMrC.xls) which is included in our list of documents. The 12345 breathing tube utilizes a 45 degree elbow which allows greater mobility to the user than the original 67890 tube. The internal dimensions and the connectors are the same in both tubes. Test data is included to prove that the respirator performs the same regardless of which breathing tube is used.

Specifies the change(s)

This request is for use of an alternate breathing tube only. No other components or processes are affected. Both breathing tubes are the same diameter and manufactured from the same materials. The performance of the respirator has not changed.

States how the change(s) affect(s) the product

The current breathing tube design, 67890 has a 90 degree connector that, for some users, does not allow enough mobility. The new breathing tube has a 45 degree elbow connection that allows greater mobility for some users, but does not affect the respirator performance.

Any time the approval holder makes a change to a critical or major characteristic, as defined in 42 CFR Part 84, affecting performance and/or design (including Quality Assurance provisions), the change must be submitted to NIOSH for approval. NIOSH will not assign new approval (TC) numbers for Extension of Approval Applications. New approvals can only be granted under a New Approval Application.

When adding an accessory to a previously approved assembly, the applicant must include the accessory in the exploded-view drawing, the assembly matrix, and the major subassembly drawings. If accessories are listed on the approval labels, the labels must be updated.

When changes are made that affect the User Instructions, highlight or clearly note the changes in the document.

1.2.3 Quality Assurance Approval Application

- Current NIOSH approval holders may use this type of application to submit new or update Quality Assurance (QA) Manuals. This type of application is limited to current approval holders.
- No other actions will be accepted under this type of application.
- QA Manual changes must include a revision history sheet showing the date and reason for revision.

Note: NIOSH will only accept QA Applications that request updates to the QA Manual. No other requested actions will be accepted under a QA Application. QA Applications will not be accepted until the requestor has at least one NIOSH-Approved product.

In the "Reason for Application" state the details of the changes to the QA Manual. Also, indicate the respirator(s) and manufacturing facility(ies) affected.

QA approval submissions must not affect the performance or design of the respirator(s) and must not result in a different type or level of protection. If the change(s) impact(s) any of these aspects of the covered respirator(s), then applicants must submit an Extension of Approval Application to address this (these) change(s).

1.2.4 Resubmission Application

- Resubmissions are only accepted when allowed by NIOSH.
- Used for hardware or documentation previously denied by NIOSH.

If an application is for hardware or documentation that has been previously submitted to NIOSH and denied, select request type 'Resubmittal of New' or 'Resubmittal of Extension' as appropriate. The "Reason for Application" must include the changes made to address the respirator or documentation deficiencies, an explanation how the respirator or documentation now meets NIOSH requirements, and the task number (TN) of the previously denied application. Failure to provide this information will result in the application being denied.

1.2.5 Amended Application

- Amended Applications are only accepted when requested by NIOSH.
- Used for open applications with an identified inaccuracy.
- Only the portion requested by NIOSH should be submitted.
- The AAR# and TN will remain the same.

1.2.6 Correlation Testing Only Application

- Choose this type of application if the respirator is being submitted to be correlated with NIOSH Standard Testing Procedures (STPs). NIOSH will only perform correlation testing using one of the NIOSH Standard Test Procedures. The results of this testing cannot be used as pre-submission test data when submitting the respirator for NIOSH approval. No approval will be issued with a Correlation Testing Only Application.

Independent or internal testing is still required prior to submittal of the application. Explain what testing is required, by STP number. NIOSH will only test the number of samples specified in the STP or 42 CFR Part 84. Specify the number of trials in the "Reason for Application" section.

1.3 Approval Label Protections and Cautions and Limitations for SARs and Combination SAR/SCBA

PROTECTIONS

CF - Continuous Flow
DE - Demand
ESC - Escape
PD - Pressure-Demand
SA - Supplied-Air
SB - Supplied-Air Abrasive Blast
SC - Self-Contained
EOSTI-25 - End-of-Service-Time Indicator 25%
EOSTI-33 - End-of-Service-Time Indicator 33%

CAUTIONS AND LIMITATIONS for SARs

A Not for use in atmospheres containing less than 19.5 percent oxygen.
B Not for use in atmospheres immediately dangerous to life or health.
C Do not exceed maximum use concentrations established by regulatory standards.
D Airline respirators can be used only when the respirators are supplied with respirable air meeting the requirements of CGA G - 7.1 Grade D or higher quality.
E Use only the pressure ranges and hose lengths specified in the User's Instructions.
I Contains electrical parts that may cause an ignition in flammable or explosive atmospheres.
J Failure to properly use and maintain this product could result in injury or death.
K The Occupational Safety and Health Administration regulations require gas-proof goggles to be worn with this respirator when used against formaldehyde.
M All approved respirators shall be selected, fitted, used, and maintained in accordance with MSHA, OSHA, and other applicable regulations.
N Never substitute, modify, add, or omit parts. Use only exact replacement parts in the configuration as specified by the manufacturer.
O Refer to User Instructions, and/or maintenance manuals for information on use and maintenance of these respirators.
S Special or critical User Instructions and/or specific use limitations apply. Refer to User Instructions before donning.

CAUTIONS AND LIMITATIONS for SCBAs

A Not for use in atmospheres containing less than 19.5 percent oxygen.
J Failure to properly use and maintain this product could result in injury or death.
K The Occupational Safety and Health Administration regulations require gas-proof goggles to be worn with this respirator when used against formaldehyde.
L Follow the manufacturer's User Instructions for changing cartridges, canister and/or filters.
M All approved respirators shall be selected, fitted, used, and maintained in accordance with MSHA, OSHA, and other applicable regulations.
N Never substitute, modify, add, or omit parts. Use only exact replacement parts in the configuration as specified by the manufacturer.
O Refer to User Instructions, and/or maintenance manuals for information on use and maintenance of these respirators.
S Special or critical User Instructions and/or specific use limitations apply. Refer to User Instructions before donning.

Section 2 Specific Instructions for Preparing a Supplied-Air Respirator and Combination Supplied-Air Respirator/ Self-Contained Breathing Apparatus Application

The paragraphs in this section are numbered to correspond to the different sections on version 8 of Standard Application Form (SAF).

1 Project Reference Numbers (Section C.1)

Enter the three character NIOSH-Assigned manufacturer's code.
Check box if the applicant currently has a NIOSH-Approved product.
Assign a unique reference number to this application.

This reference number must start with the three character NIOSH-Assigned manufacturer's code. There is no character limit on this reference number. This number must appear on each hardware sample package and the payment. Never reuse the Applicant-Assigned Reference Number (AAR#) except on Amended Applications requested by NIOSH.

NIOSH assigns a unique Task Number (TN) to each project. This number is emailed to the applicant once the application is received along with accompanying documents, check or payment confirmation, and test samples (hardware). All inquiries must refer to either the NIOSH-Assigned TN or the AAR#.

2 Type of Application (Section C.2)

Select from: New Approval Application, Resubmission of New Approval Application, Extension of Approval Application, Resubmission of Extension of Approval Application, Quality Assurance Application Correlation Testing Only Application, or Amended Application.

New Approval Application

- Used for new design, substantially modified design, or different type or level of protection requested for an existing NIOSH-Approved respirator.

Resubmission of New Approval Application

- Resubmission applications are only accepted when allowed by NIOSH.
- Used for previously denied applications.

Extension of Approval Application

- A change is made to any document that was evaluated by NIOSH as part of an approval.
- A critical or major characteristic affecting performance or design (including quality assurance provisions) is altered on a previously approved respirator.
- One new accessory is added to a previously approved respirator.
- A change is made to an approval label, assembly matrix, User Instructions, or drawings.
- A private label request is made.
- A product is made obsolete.

Resubmission of Extension of Approval Application

- Resubmission will only be accepted when allowed by NIOSH.
- Used for previously denied applications.

Quality Assurance Approval Application

- Choose this application for a new or updated QA Manual only.
- No other actions will be accepted under this type of application.

Correlation Testing Only Application

- Choose this type of application if the respirator is being submitted to be correlated with NIOSH Standard Test Procedures (STPs).
- The results of this testing cannot be used as pre-submission test data when submitting the respirator for NIOSH approval.
- Independent or internal testing is still required prior to submittal of the application.
- Explain what testing is required and indicate how many trials in the "Reason for Application."
- No approval will be issued with a Correlation Testing Only Application.

Amended Application

- Amended submissions are only accepted when requested by NIOSH.
- Used for open applications with an inaccuracy in the application.
- Only the portion requested by NIOSH should be submitted.
- The AAR# and TN will remain the same.

3 and 5 Prospective Approval Holder (Section C.3 and Section C.5)

Enter the name of the prospective approval holder.

Status of Facility **Manufacturer/Approval Holder Name (if different than above).**

Check if the organization has submitted a request for approval for any respirator produced at this manufacturing plant in the last three years.

Applicant *– A person identified by the approval holder as completing and submitting the application.*

Primary Contact *– Person who will receive the approval or denial letter and all correspondence concerning the application.*

Only those persons identified to NIOSH by the manufacturer/approval holder as official company contacts should be listed on the application. Multiple contacts can be identified as required by the manufacturer/approval holder.

Enter Official Title.

Enter the first and last name, middle initial, and suffix for the applicant.
Enter the name of the prospective approval holder, if different from above.
Enter the manufacturing plant address.
Enter the manufacturing plant phone number.

Click “add contact” to add information for another person who can answer questions related to this application.

6 Date of Application (Section C.6)

Choose the date from the dropdown calendar. The NIOSH date of application is when the application is assigned a TN by NIOSH.

7 Type of Product (Section C.7)

Select Supplied-Air Respirator since this application applies only to Supplied-Air Respirators.

8 Specific Questions Pertaining to Submission (Section C.8)

Is this a resubmittal of a previous application?

If Yes, enter the previous TN.

Is this an amended application?

Yes or No.

Is this submission application a result of field problem or site audit?

If Yes, enter the relevant TN(s).

Is the respirator intended for use in mines?

Yes or No.

Standard SCBAs under 42 CFR Part 84 must receive joint approval from MSHA and NIOSH if the unit is intended for mine use or mine rescue.

Do we need to note anything for joint approval?

Note: For firefighter SCBAs, joint approval with SEI is needed, therefore refer to the CBRN SCBA SAP for guidance.

Is this application dependent upon the approval of an application in process?

If Yes, specify the applicable AAR# or TN.

If the same respirator is being added as a private label, the second application cannot be approved until the first application is approved.

If there are two or more applications that use the same assembly matrix, check the "yes" box and identify all subsequent applications in the Approval History. The second and subsequent applications using the same assembly matrix cannot be processed until the first application is approved. Additionally, if a drawing is currently under review at NIOSH and a separate matrix is submitted, the current application should indicate that the project is dependent on the prior project and applicants should list the applicable TN.

9 Reason for Application (Section C.9)

Provide a complete, concise, descriptive reason for the application. Do not provide information relating to respirator use or future respirator development. This is the information that will appear in the CEL.

The following must be addressed in the "Reason for Application":

- If making respirators obsolete, include the TC numbers and model numbers.

List the TC numbers of all approvals affected by the application. If all of the TC numbers on the assembly matrix apply to the extension, the assembly matrix may be referenced instead of the individual TC numbers.

If an Extension of Approval Application is the result of a field problem, site audit, or product audit, state that fact and list any associated task numbers (TN) here. Also list the Corrective Action Request (CAR) number associated with the application.

Please do not list "approval" as the "Reason for Application."

Quality Assurance Approval Applications must state the details of the change(s) to the QA Manual and the respirator(s) and manufacturing facility(ies) affected. QA Approval Applications must not affect performance or design and must not result in a different type or level of protection.

Correlation Testing Only Applications must state which NIOSH Standard Testing Procedures is to be used and indicate how many trials are requested. Special correlation tests that are not consistent with a NIOSH Standard Testing Procedures will not be conducted unless previously agreed upon by NIOSH. An approval will not be issued with a Correlation Testing Only Application.

Resubmittal Application must state the modification(s) that was (were) made to address the rejection/denial, and demonstrate that the respirator or documentation now meets all requirements.

10 Approval History (Section C.10)

Provide additional information on Approval History and any other information pertaining to this application. Do not list additional requests in the Approval History.

If the application is one of a series being submitted, clearly list the AAR#s of all applications in the series. Include a suggested processing order. Include an explanation how the applications build upon each other. When using a common assembly matrix for the entire series of applications, place the

assembly matrix in the last application of the series and reference the application in which it is located in all applications in the series. Applications in a series will not be approved until the entire series is complete.

List the application TN where the respirator was last tested by NIOSH.

Example of a Well-Written Approval History for a Supplied-Air Respirator:

The new outer air supply tube material documented on revised specification sheet ASH-FL-A02 Revision A.

The change is documented on the tube bill of materials (Item 2) on page 3 of drawing 104-01 Revision D.

This modification does not affect facepiece fit, breathing resistance, airflow, nonkinkability, and permeation. Happy Breathing Company has tested the respirator with this tube and finds that it still meets the requirements of 42 CFR Part 84 for breathing resistance, airflow, nonkinkability, and permeation. Happy Breathing Company has not changed any of the connectors, air supply control valves, or other respirator components since they were granted NIOSH approval in TN-xxxxx. Happy Breathing Company is relying on the breathing resistance, airflow, and other data accompanying this submission, AAR#ph24, to obtain this approval.

This change will be applicable to the XXX mask and private labels YYY & ZZZ.

11 Description of Respirator (Section C.11)

Information for New Approval Applications and Extension of Approval Applications is entered in the SAF by selecting options from dropdown options. The respirator description fields vary based on the type of respirator selected. Both New Approval Applications and Extension of Approval Applications require a detailed narrative description.

Is this a joint SEI (CBRN NFPA) submission?

Yes or No.

Note: SEI submissions are for SCBA respirators only. If submitting for SEI joint approval, please refer to the SCBA SAP.

Is this a joint SEI (CBRN NFPA) submission?

Yes or No.

Is this an SEI retrofit respirator?

Yes or No.

Is this a CBRN Application?

Yes or No.

Select Type of CBRN, if applicable.

In this case, select SCBA if submitting for CBRN approval.

Is testing required?
Yes or No.

Return sample hardware?
Yes or No.
Note: If No, NIOSH will dispose of the equipment.

Source of submitted samples – Choose from dropdown options:
Prototype, Regular Production Unit, Correlation Test Sample.
If no testing is required, please provide the reason.

Facepiece type – Choose from the dropdown options:
Filtering Facepiece, Full Facepiece, Half-Mask, Quarter-Mask, Mouthpiece, Hood, Helmet, or Tight-Fitting Full Facepiece with Neckdam Seal.

Fit – Choose from the dropdown options:
Tight-Fit, Loose-Fit, Both Tight- and Loose-Fit, or Mouthbit.

Is this respirator fit checkable?
Yes or No.

If the respirator contains electrical components, have the components been approved by MSHA for intrinsic safety?
Yes, No, or Not Applicable.
NOTE: If the respirator is to be used in underground mines or for mine rescue, the unit requires approval from MSHA for its electrical components. However, if the respirator is not intended for mine use or mine rescue, then the unit's electrical components do not require MSHA approval.

Does the respirator have an inhalation valve?
Yes or No.

Does the respirator have an exhalation valve?
Yes or No.

Move to Supplied-Air Respirator Questions

Type of Supplied-Air Respirator – Choose from dropdown options:
Self-Contained Breathing Apparatus (SCBA), Supplied-Air Respirator (SAR), or Combination SCBA/SAR.

SCBA Type – Choose from dropdown options:
Open-Circuit, Closed-Circuit, or Other Technology.

SCBA Use – Choose from dropdown options:
Escape-only or Entry and Escape.

SAR Category – Choose from dropdown options:
A, AE, A and AE, B, BE, B and BE, C, CE, C and CE, or Other.

Selected the Rated Service Time (minutes):
3, 5, 10, 15, 30, 45, 60, 120, 180, or 240.

Airflow – Choose from dropdown options:
Demand, Pressure-Demand, Continuous Flow, or Negative Pressure.

Breathing Gas – Choose from dropdown options:
Compressed Air, Compressed Oxygen, Compressed and Rich Air, Chemical Oxygen, Liquid Oxygen, or Other Technology.

Enter the Concentration of Oxygen in Breathing Gas (percentage).

Enter the Cylinder Rating (psi).

Regulator Mounting Location – Choose from dropdown options:
Belt, Chest, Facepiece, Back or Backpack, or Helmet.

Are the materials used in the construction, which may be exposed to oxygen at pressures above atmospheric pressures, safe and compatible for their intended use?
Yes or No.

If a hose set is needed, click on Add Hose Set and provide the model number, hose type, minimum length, maximum length, other lengths, total sections, valve type, and pressure.

Also provide a description of the respirator(s).

12 Intended Protection and Safety Design (Section C.12)

Supplied-Air Respirators only:

Confirm that any materials used in the construction of the respirator which may be exposed to oxygen pressures above atmospheric pressure are safe and compatible for their intended use (e.g., exposure to elevated concentrations of oxygen).

The term "Intended for Mine Use" identifies respirators to be used for emergency use in mines. NIOSH requires this information to determine if the application must be evaluated and approved by both NIOSH and the Mine Safety and Health Administration (MSHA). Respirators to be used for mine rescue and other emergency use in mines must be approved by MSHA under 30 CFR Section 75.1714. In addition, if the respirator has electronic components, MSHA intrinsic safety approval must be received prior to submitting to NIOSH. Any questions regarding the need for joint approval, please call NIOSH at 412-386-4000.

13 Pre-Submission Performance Test Data and Statements (Section C.13)

Respirator pre-submission performance test data must accompany each application and must:

- Specify components used for test configuration by part number.
- Show units of measure for all test data (units of measure must match 42 CFR 84 subparts H and J criteria).
- Submit copies of actual test data with all results and conclusions.

To verify which tests need to be performed as part of the pre-submission testing, please refer to the Respirator Test Selection Guide. NIOSH expects that the applicant will have performed each NIOSH test and any additional tests the applicants deem appropriate during the process of validating that the device meets NIOSH approval requirements.

Note for resistance testing:
Applicant data must include airflow for all combinations of related Supplied-Air Respirators (including combination units). This data must be representative of each complete assembly (including facepiece) seeking approval. For airflow testing, NIOSH will test and verify the highest and lowest airflow combinations reported by the applicant.

For non-NFPA SCBAs the requirement on end-of-service-time indicator (EOSTI) is a minimum of 25% of full capacity. See the CBRN SCBA SAP for NFPA compliance to EOSTI.

14 Model Numbers and Product Trade Names (Section C.14)

The information provided in this field is how the product will appear in the Certified Equipment List.

A product trade name that uniquely identifies the respirator or family is required. This name will be listed in the Certified Equipment List for public reference. In version 8 of the SAF for a New Approval Application, the model number field can be blank, but the product trade name field must be completed before proceeding to the next data screen. A product trade name may indicate a protection but it may not imply use. Model numbers previously used for particulate filtering devices approved under 30 CFR 11 standards may not be reused or carried over to devices or configurations to be approved under 42 CFR Part84 standards.

15 Test Samples (Hardware) (Section C.15)

Regular production units submitted for approval must be the result of actual manufacturing processes (42 CFR Section 84.11(e)). Applications will be denied if the test samples (hardware) provided for testing did not go through the manufacturer's normal assembly, inspection, and test processes. Applications may be denied even if the component that failed is not related to the "Reason for Application."

Use the Respirator Test Selection Guide to determine the minimum number of hardware samples required for testing. Submit a sufficient number of hardware samples for testing at the time of application. The hardware samples must be sent under a separate cover from the application. In the application and on the packing slip with the hardware samples, list the item by part number and

description and indicate the quantity submitted for testing. Include a copy of the User Instructions in the box or shipping container with the hardware samples to be used for testing.

The outside of each box or shipping container and packing slip(s) should clearly indicate "Test Samples/Hardware" along with the name of the applicant, AAR#(s), part number(s), and quantity(ies). The hardware samples to be used for testing and any additional hardware samples requested by NIOSH must clearly show the part number on each item, as it is listed on the assembly matrix, regardless of how it is packaged. If additional hardware samples to be used for testing are requested by NIOSH, mark the shipment to the attention of the NIOSH employee requesting the samples. Include the AAR#, TN, and state “Additional Test Samples” on the outside of the box or shipping container. Cross-referenced lists will not be accepted.

The applicant must submit prepaid return shipping labels or provide other return means with the hardware samples for any materials to be returned upon completion of testing. “Please Return Samples” should be indicated on the packing slip. If NIOSH denies an application based upon documentation issues, the application, and in most cases, all hardware samples will be returned.

NIOSH does not retain hardware samples for any completed projects, approved or denied. The hardware samples will be promptly destroyed unless the applicant indicates the samples should be returned and prepaid return shipping instructions are provided. NIOSH is not responsible for customs charges. The applicant is responsible for all shipping costs and making all arrangements to clear the hardware samples through customs when shipping hardware samples to be used for testing to or from NIOSH.

The hardware samples submitted with the application will be tested. No substitutions, additions, or deletions are permitted by the applicant once NIOSH receives the application. If NIOSH evaluators determine a need for additional testing, additional test samples (hardware) may be requested.

Saving the Application

Once the application form has been completed, save the data file by selecting FILE, then SAVE AS, from the menu bar on the main menu screen.

Section 3 Supplemental Information for Preparing an Application

3.1 Quality Assurance Documentation

Understanding the requirements of 42 CFR Part 84 Subpart E and specific quality system characteristics as noted below are necessary to adequately develop and maintain Quality Assurance and quality control programs acceptable to NIOSH. Prior to obtaining any approvals under 42 CFR Part 84, all approval holders are required to have an approved Quality Assurance (QA) Manual on file at NIOSH.

If an organization has an approved QA Manual and there is no change, complete the applicable blocks on the SAF. If a previously approved QA Manual is being revised, it is not necessary to submit the entire manual. In a separate application, submit only the sections that have been revised and an updated revision history sheet.

3.2 Quality Assurance Manual

Submit a Quality Assurance Manual that documents the following elements at a minimum:

A. Statement of Quality Assurance.
- Upper management approval of the manual (usually a signature).
- A revision history sheet showing date and reason for revision.
- A Table of Contents.
- Management assurance that the QA system meets NIOSH requirements in 42 CFR Part 84 Subpart E.

B. Description of Management Responsibilities as they relate to:
- The company quality policy.
- Personnel/organization structure necessary to carry out these provisions.
- Verification of quality (internal auditing).
- Quality system review.
- International Standards Organization (ISO) Certification (if applicable).

C. Structure of Quality System.
- Identify how quality procedures and instructions are prepared and implemented.

D. Contract Review Activities (as applicable).

E. Design Control for aspects of safety, performance, and dependability of the product reliability programs.

F. Control of All Documents and Data (control of engineering drawings, documentations, and changes).

G. Quality in Purchasing.

H. Control of Customer-Supplied Product (control of purchased material to include incoming inspection).

I. Product Identification and Traceability.

J. Control of Production Processes (lot identification, control of processes, manufacturing, fabrication, and assembly work conducted in the plant).

K. All areas of Inspection and Testing: Receiving, In Process, and Final Inspection.

L. Control of Inspection, Measuring, and Test Equipment.

M. Inspection and Test Status.

N. Control of Nonconforming Product.

O. Corrective and Preventive Actions (as applicable).
P. Inventory and Handling Controls.
Q. Control of Quality Records.
R. Internal Quality Audits (audit of final inspection of the completed product).
S. Training.
T. Servicing (as applicable).

Note: If the manual does not incorporate the specific elements within the document, then the manual must link or list the Standard Operating Procedures (SOPs) for the various elements.

3.3 Product Quality Control Plan and Documentation

Product Quality Control Plan (PQP) documentation is required to be submitted as part of an application to demonstrate to NIOSH the applicant's process characteristics involved in controlling and monitoring the quality of the respirator being manufactured.

Items that must be submitted are the:

A. PQP flowcharts showing all inspection and test operations. Identify each procedure by AAR#. Inspection or test procedures must be clearly identified on the flow chart.
B. Sampling plan and classification of defects document as described in 42 CFR Section 84.41 (c), (d), (e), (f), (g), and (h).
C. In process inspection and test procedures for items listed on the assembly matrix.
D. Final inspection and test procedures for the complete respirator and items listed on the assembly matrix.
E. Simplified Supplied-Air Respirator drawing.
F. Assembly matrix.

3.4 Fees

An application fee of $200 is required at the time of submission for all approval requests. Checks are to be made payable to NIOSH, dated less than 30 days prior to the submission date, and contain the AAR#. The specific AAR# for the application must be written on the check. Checks older than 30 days may be returned. Separate checks are required for each application submitted. Do not issue multiple application fees on one check. Otherwise, checks will be returned and application processing delayed.

NIOSH will not begin processing the request until all items (application, check, and hardware samples) are received. If a domestic applicant utilizes Pay.Gov, a copy of the Pay.Gov receipt to the NIOSH NPPTL Records Room to facilitate linking the payment to the approval request.

As part of the Initial Review Process, an estimate of the costs anticipated to be incurred during the evaluation will be provided. An email from the initial reviewer will be sent to the applicant towards the end of the initial review phase.

This estimate is prepared based on the "Reason for the Application," the number of approvals affected, and the assigned tests. In the event other testing or other additional cost items are identified after the acceptance of the original estimate, the company will be contacted and an addendum to the estimate will be forwarded for acceptance.

Once the applicant has provided authorization to the initial reviewer via email, the evaluation can begin. During the Final Review Phase, an invoice for all fees, including testing of equipment, incurred in the processing of an application will be generated. Invoices will contain specific payment instructions and identify authorized methods of payment, and will be provided to the approval holder for payment.

Respirator Approval Application-Based fees are as follows:

Administrative Fees:

Fee Type	Legal Citation	Amount	Due Date
Application	42 CFR §84.20(b)(1)	$200 per application submitted.	Upon receipt of any application request. To be submitted with application.
Approval	42 CFR §84.20(b)(1)	$100 per each certificate of approval issued.	Upon receipt of the invoice.
Approval Modification	42 CFR §84.20(b)(1)	$50 per each certificate of approval modified.	Upon receipt of the invoice.
Site Qualification	42 CFR §84.20(b)(3)	• Existing approval holder, paper review: $400 per each request to inspect new production facility. • Prospective approval holders: ▫ One day domestic site visit - $2,500. ▫ One day international site visit - $7,500.	Upon agreement on the date of the site qualification.

Note: For any modification to an existing approval, such as changes to User Instructions or PQP, the approval modification fee will be charged for all the approvals affected by this change. For example, if the User Instructions are revised due to a change in a specific respirator, but the same User

Instructions are used on a family of respirators (example: family consists of 20 approvals), the approval modification fee of $50 will be charged for all the approvals under that family of respirators (20 X $50 = $1,000).

Testing fees will be charged in accordance with the following fee tables and will be due upon receipt of the invoice. The final letter (approval or denial) will be issued to the primary contact once all reviews are complete. The invoice is to be paid within 30 days after receipt.

3.5 Supplied-Air Respirator and Combination Supplied-Air/Self-Contained Breathing Apparatus Test Fees

All of these tests may not apply to the specific type of respirator being submitted. These apply only to supplied-air and combination SAR/SCBA respirators.

New Site Qualification Fee, Existing Manufacturer	$400.00

Supplied-Air Testing Fees:

0100	Strength of Hose and Coupling, C and CE SAR	$150.00
0101	Tightness of Hose and Couplings, C and CE, SAR	$150.00
0102	Nonkinkability of Hose, C and CE, SAR	$150.00
0103	Gasoline Permeability of Hose/Couplings, C and CE	$450.00
0104	Regulator 100,000 Cycle Test, Demand/PD, C/CE	$3,000.00
0105	Airflow Determination, CF, C and CE SAR	$300.00
0105A	Airflow Determination, Demand/PD, C and CE SAR	$300.00
0106	Inhalation Airflow Resistance, PD, C and CE SAR	$150.00
0107	Exhalation Airflow Resistance, PD, C and CE SAR	$150.00
0108	Inhalation Airflow Resistance, Demand, C/CE SAR	$150.00
0109	Exhalation Airflow Resistance, Demand, C/CE SAR	$150.00
0110	Gas Tightness Test, IAA, C and CE SAR	$450.00
0111	Sound Level in Hood or Helmet, C and CE SAR	$450.00
0112	Protection Level, Abrasive Blast, CE, NaCl or Corn Oil	$450.00
0113	Airflow Resistance, CF, C and CE SAR	$150.00
0114	Sound Level Hood/Helmet Escape SCBA	$450.00
0115	Rated Service Time, CF, Escape SCBA	$150.00
0116	Airflow Resistance, CF, Escape SCBA with Hood	$150.00
0117	Positive Pressure, PD, CCSCBA,	$150.00
0118	Low Temperature Operation SCBA	$1,200.00
0119	Low Temperature Operation, Combo SCBA and C/CE SAR	$1,200.00
0120	Positive Pressure, SCBA	$75.00
0121	Rated Service Time, SCBA, Demand and PD	$75.00
0121A	Rated Service Time, CCSCBA, Demand and PD	$75.00
0122	Exhalation Resistance, SCBA, Demand and PD	$150.00

0123	Gas Flow Measurement, SCBA, Demand and PD	$150.00
0124	Remaining Service Life Indicator, SCBA, Demand/PD	$150.00
0124A	Alarm Pressure, CCSCBA, Demand and PD	$150.00
0125	Gas Tightness, IAA, SCBA, Facepiece and Mouthpiece	$750.00
0125A	Gas Tightness, IAA, SCBA, Hoods or Helmets	$750.00
0126	Bypass Valve Flow, SCBA, Demand and PD	$150.00
0127	Bypass Valve Flow, CCSCBA, Demand and PD	$150.00
0128	Accuracy of Gauge, SCBA	$150.00
0132	Inhalation Breathing Resistance, Demand SCBA	$150.00
0133	Exhalation Breathing Resistance, PD SCBA	$150.00
0134	Gasoline Permeation of Breathing Bag, CCSCBA	$750.00
0135	Inhalation and Exhalation Resistance, CCSCBA, D/PD	$150.00
0136	Demand Gas Flow, CCSCBA, Demand and PD	$150.00
0137	Continuous Gas Flow, CCSCBA, CF and Demand Flow	$450.00
0138	Safety Relief Valve Operation, CCSCBA, Demand/PD	$150.00
0139	CO^2 Facepiece Level Determination, SCBA	$450.00
0140	Man Tests, SCBA	$3,000.00
0141	Man Test 5, CCSCBA	$150.00
0142	Vibration (Ro-Tap), Man Test 1, CCSCBA, Demand Esc	$750.00
0143	Low Temperature Operation, CCSCBA	$1,200.00
0144	Gas Flow, Constant Flow CCSCBA	$300.00
0145	Sound Level End-of-Service-Life Indicator, SCBA	$750.00
0146	Diaphragm Over pressurization, Belt Mounted SCBA	$300.00
0147	Mode Transfer Test, SCBA/SAR	$150.00
0148	Remote Gauge Leak Flow, SCBA, Demand and PD	$150.00
0148A	Remote Gauge Leak Flow, CCSCBA, Demand and PD	$150.00
0155	Man Test 6, SCBA Liquefied Gas	$2,400.00

A single payment (check or pay.gov) for multiple invoices is allowed. Include the AAR#s for each associated application on the check or the pay.gov receipt so they will be properly credited. Separate payments (check or pay.gov) will also be allowed for each application invoice. For application fee invoices, included the TN number(s) associated with the payment. To indicate a final payment for a specific application(s), add an -F after the TN number(s) (TN-nnnn-F).

3.6 Annual (Fixed) Certification Fees

Annual (fixed) certification (approval) fees will be invoiced to approval holders who hold active or obsolete certificates of approval. Invoices will be sent in September with payment due by October 30 of the applicable year. Invoices will itemize the number of manufacturing sites and approvals and apply the fees per the following table:

Respirator Certification Fee Schedule A—Annual (Fixed) Fees

Fee Type	Legal Citation	Amount	Due Date
Maintenance of Product Performance (Product Audit)	42 CFR §84.20(b)(5)	• Annual fee: $761 per each approval holder. • Variable fee: as billed by NIOSH based on the respirators chosen to be tested each year.	October 30 of applicable year.
Records Maintenance	42 CFR §84.20(b)(1)	$50 per every listed[1] approval on file with NIOSH on July 1st of each year.	October 30 of applicable year.
Quality Assurance Maintenance (Site Audit)	42 CFR §84.20(b)(4)	• Annual fee: $3,000 per every manufacturing site registered with NIOSH. • Variable fee:[2] ▫ 1 day domestic audit - $2,500 per site. ▫ 2 day domestic audit - $5,000 per site. ▫ 1 day international audit - $7,500 per site. ▫ 2 day international audit - $10,000 per site.	October 30 of applicable year.
Maintenance of Testing and Approval Facilities	42 CFR §84.20(b)(2)	$34 per every listed[1] approval on file with NIOSH on July 1st of each applicable year.	October 30 of applicable year.
Maintenance of Test Equipment	42 CFR §84.20(b)(2)	$36 per every active[3] approval on file with NIOSH on July 1st of each applicable year.	October 30 of applicable year.

1. "Listed" approvals include all active and obsolete approvals. The Certified Equipment List (CEL) reflects the current listed approvals maintained by NIOSH.
2. Applies to design as well as manufacturing sites.
3. Does not include obsolete approvals.

Checks are to be made payable to NIOSH, must be dated less than 30 days prior to the submittal date, and must reference the AAR#, TN, or NIOSH invoice number.

3.7 Pay.Gov Instructions

Domestic applicants may use the electronic fees transfer program known as Pay.Gov.

Note: Prior to making any payment of respirator approval fees, applicants must establish an account with Pay.Gov.

A. Follow the web link provided below:
   a. PAY.GOV homepage: https://pay.gov/paygov/homepage.
B. On the center of the web page click on the link "Click here to register" to start the process or go to the web page address provided below:
   a. Registration: Pay.gov - Register for a Pay.gov Account.
   b. Read the User Responsibility Statement, fill in the box, and select accept.
   c. Select the "Continue with Self Enrollment" tab.
   d. Complete the required fields in the Online Self Enrollment form and then select "submit."
   e. Use Pay.Gov username and password to log into the Pay.Gov system from the homepage.
   f. Access the forms necessary to submit payments online using this process.
C. Fee Payment User Instructions.
   a. Open the Pay.Gov homepage.
   b. Locate the "User Fee Form."
      i. Go to the Find Public Forms section below the login.
      ii. Search for forms by three options:
         1. Form Name.
         2. Agency Name.
         3. Search Public Forms.
      iii. Use one of three links listed on the six forms in the system for the Centers for Disease Control and Prevention (CDC).
         1. Form Name: CDC Royalty BMLA and User fee Form.
            a. Select CDC User Fee Form.
         2. Agency Name: CDC Royalty BMLA and User Fee Form.
            a. Select CDC User Fee Form.
         3. Search Forms: CDC Royalty BMLA and User Fee Form.
            a. Select CDC User Fee Form.
         4. Click on the form name to open the online fillable form.
      iv. Complete the Online CDC User Fee Form.
         1. Complete all mandatory blocks marked with asterisks.
         2. Under CDC Invoice Number, enter the three digit Applicant-Assigned Reference Number (AAR#).
            a. If payment is for an existing Task Number (TN), enter the associated TN.
         3. For "Payment Options," select the "NIOSH User Fee" from the three choices.

4. Enter a short description in the comments block regarding the payment. Add any specific identifying information regarding the submission that may help in processing the payment.

c. When submitting the form, users will be prompted to enter their Automated Clearing House (ACH) debit information.

D. Currently Pay.Gov accepts payment directly by the Automated Clearing House (ACH) feature or through credit or debit cards as follows:

a. Credit Cards: Visa, MasterCard, American Express, and Discover.

b. Debit Cards: Visa and MasterCard processed only.

Note: More in-depth instructions and information can be found at Pay.Gov homepage.

3.8 Drawings for a Supplied-Air Respirator and a Combination Supplied-Air Respirator/Self-Contained Breathing Apparatus

All drawings must be in English. Drawings are accepted in Adobe Acrobat, ProEngineer, Autodesk, Smart Draw, and Corel Draw. Drawings should be named using a unique identifier of the organization's choice, R for drawing, the revision level (e.g., a, b, c, etc.), and the file extension representing the software program (e.g., nnnnRa.dwg). All engineering and CAD drawings must be saved and submitted in full view mode. All engineering and CAD drawings must be submitted in black and white. The signature blocks on each submitted drawing must contain the initials or signature of the preparer and approver along with the approval date for the drawing revision.

3.8.1 Exploded-View Drawing and Major Subassembly Drawing for a Supplied-Air Respirator and a Combination Supplied-Air/Self-Contained Breathing Apparatus

For Supplied-Air Respirators, the exploded-view drawing is the major subassembly drawing and must include the complete respirator with critical or major dimensions, materials, and characteristics as listed on the Supplied-Air Respirator drawing checklist. User Instructions do not need to be illustrated on the exploded-view drawing. Do not include future submittals or unapproved assemblies on the exploded-view drawing.

Use an identifying numbering system of the major subassemblies on the exploded-view drawing to reference major subassemblies from the assembly matrix to the exploded-view drawing.
The identifying numbering system on the major subassemblies must match exactly with the assembly matrix. If a facepiece is shown as item 1 on the assembly matrix, it must also be item 1 on the exploded-view drawing. The applicant may use dotted lines around subassemblies on an exploded-view drawing to group the smaller parts together into one major subassembly. If the profile of a component changes, i.e., from a facepiece to a facepiece with a side window, the components must be shown separately as 1a, 1b, 1c, etc.

3.8.2 Example of an Exploded-View Drawing for a Supplied-Air Respirator and a Combination Supplied-Air/Self-Contained Breathing Apparatus

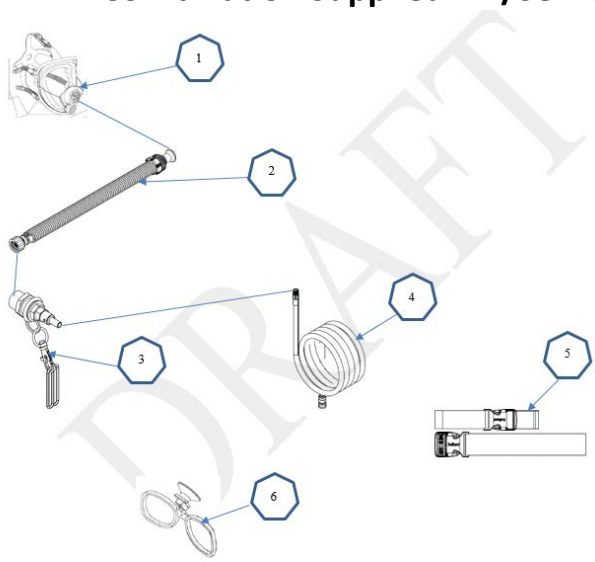

3.8.3 Major Subassembly Drawings for a Supplied-Air Respirator

Applicants must submit major subassembly drawings for each major subassembly shown on the exploded-view drawing. If a major subassembly is unchanged from a previous submittal and the drawing is already on file at NIOSH, the drawing does not have to be resubmitted. The major subassembly drawings may not contain future submissions or show unapproved assemblies. All major subassembly drawings must meet the requirements defined in the Major Subassembly Drawing Checklists found in Section 6. All drawings must be under the approval holder's control and in compliance with the document control system. Major subassembly drawing numbers and revision levels must match exactly with those found on the assembly matrix. Major subassemblies must have permanent identifying part numbers marked on them. This part number must appear in the part number row of the assembly matrix. The part number location must be clearly shown on the major subassembly drawings.

3.8.4 Material Specifications on Drawings for a Supplied-Air Respirator and a Combination Supplied-Air Respirator/Self-Contained Breathing Apparatus

For material specifications, use the criteria of affecting performance or design. For example, if an accessory would not affect the performance or design, materials could be identified as plastic, metal, rubber, etc. However, if the items do affect performance or design, they would be identified as aluminum, butyl rubber, etc. The phrase "or equivalent" should not be used.

3.9 Component Vendors

If the applicant controls all specifications for the component, the component vendors do not need to be specified. If the applicant does not control all specifications of the component, then the applicant must provide the name of the vendor. In accordance with 42 CFR Sections 84.42 (c) and 84.43 (c) the approval holder is obligated to manufacture in accordance with the approved documentation. NIOSH reserves the right to revoke, for cause, any certificate of approval where it is found that the applicant's quality control test methods, equipment, or records do not ensure effective quality control over the respirator for which the approval was issued. See the April 7, 2005 Letter to All Manufacturers on "Clarification of Supplier and Subcontractor Relationships" for additional information.

3.10 Assembly Matrix

- An assembly matrix is a diagram of major subassemblies and accessories. It must be submitted electronically in Microsoft Excel 97 or later formats and it must be formatted as shown in the example. The assembly matrix cannot be part of the exploded-view drawing.
- An "X" placed in the wrong box on a label or assembly matrix could delay the approval process. Please verify the placement.
- Only one assembly matrix is necessary for a series of applications involving a common assembly matrix. This assembly matrix must be submitted with the last application in the series.
- The AAR# for the application that contains the assembly matrix must be identified in the Approval History section of each application in the series.
- When a new TC number is being requested, identify the rows for the new TC number using the numbering convention of "schedule #, AAR#, alpha character" in the TC number column. For

example, for a Supplied-Air Respirator the schedule# is 19C, followed by the AAR# MOR699, the TC number cell for the first row of the new approval would be 19C-MOR699a. The second row would be numbered 19C-MOR699b, the third row would be numbered 19C-MOR699c, etc.

- "TC-"can only appear in the column heading; do not use "TC-" in the assembly matrix row.
- Features that describe the respirator cannot be listed on the assembly matrix as a separate column.
- Features associated with specific model numbers may be coupled together in the description column heading (e.g., Model 1201-EZ Flow, Model 1202-EZ Flow, etc.).
- The listing of User Instructions on Supplied-Air Respirator assembly matrices is mandatory.
- More than one assembly matrix may be submitted with an application, if relevant.
- Columns with new information or revised information may be lightly shaded.
- Future submissions or unapproved assemblies should not be shown on the assembly matrices.
- Blank cells need to be entirely blank. The cells should not contain any unnecessary information, spaces, embedded characters, hidden rows or columns, etc.
- The complete respirator or the respirator components listed on the assembly matrix must exactly match those illustrated on the exploded-view drawing.

Some components may be an accessory on one approval and a required component on another. If a component is an accessory, this must be explained in the "Reason for Application." If this information is not clearly stated, NIOSH will consider the component required. The assembly matrix must list all major subassemblies and accessories.

The NIOSH evaluation status for each component or subassembly must be indicated as follows:

X = An existing component or respirator that has been previously tested and approved by NIOSH in this configuration.

N = A new component or respirator. If a new TC number has been requested, "N" must appear in every column across the entire row. If an Extension of Approval is requested, "N" should only appear in columns for respirators or components new to the approval.

P = Pending. A component or respirator submitted in an earlier application that is currently being evaluated by NIOSH.

R = A redesign or revision to an existing component or respirator where the part number has not changed. "R" is to be used indicating a change to any associated document with that component.

- = A component or respirator designated by the approval holder as obsolete. Do not use "double dash." An obsolete item must be shown on the matrix as obsolete for the TC number/part number combination at least once. Once organizations have submitted an assembly matrix with obsolete items, they may drop these items from the matrix in future submissions. If obsoleting an approval, dash marks must appear in every block that a component for that approval was marked.

A = Accessory item. An item that does not affect the ability of a respirator to meet the requirements of 42 CFR 84. The approval remains in effect whether the accessory is used or not.

For easier review and evaluation, it is recommended that applicants lightly shade the rows and columns containing new or redesigned (N or R) components. If no cells are marked N or R, the

applicant should reconsider whether an application for approval is required. If in doubt, call NIOSH NPPTL *Conformity Verification and Standards Development Branch at (412) 386-4000*.

3.11 Approval Labels and Private Labels

Approval labels used in User Instructions, on packaging, or on devices must be legible. Labeling requirements vary based on the type and intended use of the respirator. See example label formats for Supplied-Air Respirators. The list of protections must be in the same order and identical to the matrix. Submit draft versions of the appropriate labels.

Labels must be submitted for all New Approval, and for Extensions of Approval when the components change. Labels must be created in Excel (97 or later) and follow the format of the examples. Accessories may be listed on the approval label, but are not required. NIOSH will accept draft labels with the location of the Health and Human Services (HHS) and NIOSH logos noted. Logos are available on the NIOSH NPPTL homepage. The applicant is responsible for inserting the logos during label production. Approval labels may not contain future submittals or show unapproved assemblies.

3.12 List of NIOSH Cautions and Limitations for a Supplied-Air Respirator and a Combination Supplied-Air Respirator/Self-Contained Breathing Apparatus

SAR (Airline): A*, B, C, D, E, I*, J, K*, M, N, O, S*
SCBA: I*, J, M, N, O, S

Special Cautions and Limitations.

* **Notes**:

A For an SAR, this is not needed if the unit is equipped with an escape bottle.

I Applies if the respirator contains electrical components and the intrinsic safety has not been evaluated and approved by MSHA or a recognized independent laboratory.

K When used with half mask, gas proof goggles are required for formaldehyde.

S With unique or unusual design or critical operation requirements or a private label version.

Limitations:

- Do not use this apparatus where there is direct exposure to flames or in high radiant heat (this limitations applies to 100 percent oxygen apparatus only).
- Provide proper care, training and maintenance of the apparatus as specifically described in the manufacturer's instructions and maintenance manuals.

Cautions:

- Keep exposed hair to a minimum when using apparatus near open flames or in radiant heat.
- A good facepiece seal is important since facepiece leakage will seriously reduce service time.
- Use of pure oxygen or oxygen enriched air increases flammability and lowers the ignition temperature of most materials.

Cautions and limitations may vary or additional ones may apply depending on design and performance.

If the respirator contains electrical components and the applicant wishes to list the respirator on the NIOSH approval label as intrinsically safe, first obtain intrinsic safety approval from the MSHA under Title 30 CFR Part 18 or other recognized independent laboratory and submit verification of such approval in the application. If the respirator is for underground use, MSHA intrinsic safety approval must be received first prior to submitting to NIOSH.

Combination units usually require all cautions and limitations from either type.

3.13 Private Labeling Versus Private Packaging

Private Labeling

Approval Holder A enters into an agreement to allow Company B to sell Approval Holder A's respirator as being manufactured by Company B. All packaging, labeling, markings, User Instructions, and literature should indicate Company B. This approach appears to the user that the approval holder of the respirator is Company B. The only reference to the actual approval holder is in a Special Instructions "S" section. The respirator name, model number, and part number may or may not be the same as what is used by Approval Holder A. The NIOSH TC number will not be changed.
Approval Holder A remains responsible for the respirator quality and all packaging, labeling, markings, and literature pertaining to the NIOSH approval. Approval Holder A must ensure that the private labeler does not misrepresent the NIOSH approval. Private labeling is always submitted to NIOSH by the approval holder for approval.

An Extension of Approval Application, submitted by the approval holder, is necessary for all private label requests. If a part number or model number changes, the Extension of Approval Application must be submitted showing this change in the assembly matrix and all labeling.

A Special Cautions and Limitation "S" is to be added to the private label approval label.
A specific section titled "S-Special Instructions Section" is to be added to the private label User Instructions as follows:

> *The model/part number "respirator type" has been manufactured by Company (Approval Holder A) for private label Company B under TC-XXY-nnnn.*

Private Packaging

Approval Holder A enters into an agreement to have its respirators sold by Company B. Company B puts the assembled respirator in a different or additional package. The respirator name, model number, part number, respirator labeling, markings, User Instructions, and literature show Approval Holder A as the approval holder. The packaging may represent Company B and its catalog or other reference number.
However, this packaging must be done in a manner which does not mislead the user to think Company B is the approval holder. Clarifiers, such as "Sold by Company B and Manufactured by Approval Holder A" or "Made by Approval Holder A for Company B" must be included on the packaging. The NIOSH approval label will not be changed. Approval Holder A remains responsible for respirator quality and

all packaging, labeling, markings, and literature that pertains to the NIOSH approval. Approval Holder A must ensure that the private packager does not misrepresent the NIOSH approval. NIOSH does not need to be notified of private packaging arrangements (no application needs to be submitted).

Note: Private packaging does not result in any changes to NIOSH documentation on file for the approved respirator configuration. User Instructions and NIOSH approval labels provided on or with the package must not be changed. Approval labels and the package artwork are part of the NIOSH documentation and therefore must not be changed to remain a private packaging arrangement.

For both private labeling and private packaging arrangements, the approval holder is responsible for notifying the private label or private package company of any changes in approval status, such as stop sale, rescission, or revocation.

3.14 User Instructions

User Instructions must be submitted to NIOSH for Supplied-Air Respirators and Combination Supplied-Air Respirators and Self-Contained Breathing Apparatus. User Instructions must be listed and are required to be listed on the assembly matrix for Supplied-Air Respirators. An Extension of Approval Application is required for changes to the User Instructions. User Instructions and associated procedures such as maintenance requirements, inspection procedures, and donning and doffing instructions that pertain to the respirator submitted for approval must be submitted as a complete package. When there is a change, NIOSH will not accept only the amended pages. A complete User Instructions document must be submitted indicating what has been changed either by highlighting the changed items or a cover page listing the page numbers and detailing the paragraphs that were updated. A complete User Instructions document must be submitted. The file description for the User Instructions must clearly and specifically identify the model or product line and revision level. Bold, underline, or otherwise indicate all changes to the User Instructions from the prior revision level. When an approval has an issue or a performance issue, corrections to the User Instructions is not adequate to address the issue.

For Caution and Limitation "S," Special or Critical User Instructions**,** noted on the approval label and listed in the User Instructions:

- Approval holders have discretion in what is identified as special cautions or limitations. To be "special" the specific attribute of the respirator must go beyond the standard cautions and limitations and be unique or unusual for the class of respirator.
- If the approval holder states "Special or Critical User Instructions or specific use limitations apply," the Special or Critical User Instructions must be readily identified within a separate section of the User Instructions with the heading, "*S - Special or Critical User Instructions.*"
- Examples of special or critical instructions are special donning procedures, service life limitations, and private labeled respirators.

For private label respirators, the "S" - Special or Critical User Instructions section in the private label holder's User Instructions will state:

> *"The model/part number "respirator type" has been manufactured by Approval Holder A (Company) for private label Company B under TC-19C-nnnn."*

If Special or Critical User Instructions or specific use limitations are stated, these items will be reviewed to ensure the items are correct and appropriate.

For all tight-fitting respirators that must be fit tested prior to use, the following Occupational Safety and Health Administration (OSHA) reference must be included in the User Instructions under a Special "S" titled listing:

> *Before occupational use of this respirator, a written respiratory protection program must be implemented meeting all the local government requirements. In the United States, employers must comply with OSHA 29 CFR 1910.134 which includes medical evaluation, training, and fit testing.*

Requirements Specific to Supplied-Air Respirators and Combination SAR/SCBAs
The approval label may be located on the container or box or inserted in the package or in the User Instructions. The location of the approval label and User Instructions within the final packaging arrangement, are to be stated either on the respirator drawing or as an attachment to these documents. Packaging artwork is not required, but will be accepted as fulfillment of this requirement.

3.15 Packaging Art Work and Carton Design

In accordance with 42 CFR Section 84.33, the applicant will submit full scale reproductions of approval labels and markings, and a sketch or description of the method of application and position on the harness, container, canister, cartridge, filter, or other component, together with the instructions for use and maintenance of the respirator.

Approval labels will include the HHS and NIOSH logos, the applicant's name and address, the approval number assigned by NIOSH and, where appropriate, restrictions or limitations on use of the respirator. When additional labels, markings, or instructions are required, the applicant will be notified. Approval labels and markings will only be used by the applicant to whom the labels were issued.

Legible reproductions or abbreviated forms of the label approved by NIOSH for use on each respirator will be attached to or printed on the following locations:

Respirator type	Label type	Location
Self-Contained Breathing Apparatus	Entire	Harness assembly and canister (where applicable).
Supplied-Air Respirator	Entire	Respirator container or instruction card. Both for combination units.

When a company receives and accepts a NIOSH approval, they are agreeing to manufacture, inspect, and test the respirator as they stated in their documentation as approved by NIOSH. The company will maintain the PQP as submitted and approved and will not deviate from this plan. The plan will only be changed after the company submits a request to NIOSH and the plan change is reviewed and approved by NIOSH.

Each respirator, respirator component, and respirator container will, as required by NIOSH, to assure quality control and proper use of the respirator, be labeled distinctly to show the name of the applicant, and the name and letters or numbers by which the respirator or respirator component is designated for trade purposes, and the lot number, serial number, or approximate date of manufacture.

Approval holders may not imply "use" for approved respirators.
Package advertising that is not permitted includes phrases such as:

"NIOSH-Approved Airline Paint Spray Respirator."

A trade name implying use, such as "Airline Paintspray Plus Respirator."

Packaging may include a phrase such as: "NIOSH-Approved Airline respirator; recommended by the approval holder for lacquer paints."

3.16 Summary of Related Documents

Provide a complete and accurate listing of all new or revised files that pertain to the application. Give a specific filename to each controlled document submitted with the application. The summary of related documents must precisely match the electronic files submitted. Applications may be returned without being processed if the summary is incorrect.

The following information must be included:

Filename:
XXX represents the three character NIOSH-Assigned manufacturer's code and should only appear on the application.
nnnn represents the unique characters chosen by the applicant.
The filename with extension must be listed, using Specific file naming conventions.
Spaces must not be used in filenames.
Filenames are derived from the controlled document number, not the AAR#.
For example, the filename for drawing 10222 revision A should be 10222Ra.dwg.
For future submissions of the same document, the only change to the filename will be to the revision level; the next submission of the drawing above would be 10222Rb.dwg.
Files submitted using the AAR# as filenames will be returned.

Document Type: Pretest data, drawing, assembly matrix, draft approval label, QA Manual, PQP, service life plan, User Instructions, etc.

Description: Detailed description giving specific information identifying model name or number, revision level, drawing number, and title.

Software program extension: The software program (including version) used to create the file.
nnnn= unique identifying characters
a, b, c, etc. = revisions
.pdf, .xml, .xls, etc. = program used to create file

In addition to the application file, the manufacturer must submit related project documents. These documents must be in English and saved with the following file-naming conventions. Any files created in a language other than English will be returned unprocessed.

3.17 File Naming Conventions

Required Documents	Naming Convention Abbreviation	Acceptable Software Packages	File Naming Convention Format
Application Form	-	Microsoft Access Java Adobe Acrobat	XXXnnnn.MDB XXXnnnn.xml XXXnnnn.PDF
Pretest Data	PD	Adobe Acrobat Excel Microsoft Word	nnnnPD.PDF nnnnPD.XLS nnnnPD.XLSX nnnnPD.DOC nnnnPD.DOCX
Drawings	R followed by revision level (if applicable)	Adobe Acrobat AutoCAD Scanned file	nnnnRa.PDF nnnnRb.DWG nnnnRc.TIF nnnnRd.GIF nnnnRe.JPG nnnnRf.BMP (a-f indicate various revision levels)
Assembly Matrix	AM followed by revision level (if applicable)	Excel	nnnnAMa.XLS nnnnAMb.XLSX
Draft approval labels	DL followed by revision level (if applicable)	Excel	nnnnnDLa.XLS nnnnDLb.XLSX
Quality Assurance (QA) Manual	QM followed by revision level (if applicable)	Adobe Acrobat Scanned file Excel Microsoft Word	nnnnQMa.PDF nnnnQMb.TIF nnnnQMc.XLS nnnnQMd.XLSX nnnnQMe.DOC nnnnQMf.DOCX Plus one signed paper copy (a-f indicate various revision levels)
Product Quality Control Plan (PQP)	PQP followed by revision level (if applicable)	Adobe Acrobat Scanned file AutoCAD Excel Microsoft Word	nnnnPQP.PDF nnnnPQP.TIF nnnnPQP.DWG nnnnPQP.XLS nnnnPQP.XLSX nnnnPQP.DOC nnnnPQP.DOCX
Fees	-	Paper or PAY.GOV only	Paper or PAY.GOV only
User Instructions (UI)	UI followed by revision level (if applicable)	Adobe Acrobat Scanned file Microsoft Word	nnnnUIa.PDF nnnnUIb.TIF nnnnUIc.DOC nnnnUId.DOCX (a-d indicate various revision levels)

- If “zipped” files are submitted, provide the individual filename, description, and program for each working file contained in the zipped file.
- If there is more than one User Instructions or assembly matrix, list them in the assembly matrix by name.
- If NIOSH has requested replacement files, give the replacement files the same name as the original files.

- Send replacement files only at the request of NIOSH, and send them directly to the NIOSH employee requesting the files. The requestor is responsible for having the corrected files posted to your project.
- NIOSH will only accept replacement or new files that have been requested by NIOSH.
- NIOSH will only accept single documents under a single file name. Multiple documents under a single file name will not be accepted and the application may be denied.

Section 4 Approvals and Denials

4.1 Approval Documentation

If the respirator complies with all of the requirements outlined in these procedures and 42 CFR 84, NIOSH will grant an approval and assign a TC number.

All submitted documentation and supporting test data will become part of the approval record. NIOSH will send a letter to the applicant's primary contact stating the nature of the approval and will return final approval label files, if applicable, with the appropriate approval documentation. Applicants may use consultants or authorized representatives as contacts for the application. These contacts may submit applications either by request of the company primary contact or in place of the company primary contact. Foreign companies may provide a U.S. contact as a consultant or authorized representative. For applicants using consultants or authorized representatives, the final letter of approval and enclosed documentation will be sent directly to the applicant with a copy of the approval letter to the consultant or authorized representative. All approval documentation and application discussions will still be done through the company primary contact.

When application approval labels and assembly matrices contain rows of information for approvals other than the ones evaluated in the individual application under review, approval letters will indicate that only the approvals indicated (or marked requested) under the individual application are granted.

4.2 Denial Documentation

If the respirator fails to meet the requirements of 42 CFR Part 84, the application will be denied and all documentation, CD-Rs or DVD-Rs, and sample hardware will be returned or destroyed. NIOSH will not retain documentation or sample hardware for any respirator that has failed to meet all of the requirements. If NIOSH denies an application based upon documentation issues, the application, CD-Rs or DVD-Rs, and all sample hardware will be returned to the applicant's U.S. or Canadian address or authorized representative. It is recommended that foreign applicants have and use their U.S. representative's address on return shipping labels.

Note: If any failure occurs in a series of applications, all related applications will also be denied.

Subsequent requests for approval of previously failed units must be submitted with all associated documentation and the reason for failure must be addressed.

4.3 Denial Prior to Assignment of a Task Number

Some of the reasons applications will not be accepted and will be denied prior to issuance of a TN include:

- An application is assigned a previously used AAR#.
- A major section of the application such as the assembly matrix, QA Manual, approval labels, pretest data, User Instructions, or drawing package is missing, in an unacceptable file format, or uses an unacceptable file naming convention.
- Sample hardware, application package, and payment are not received within two weeks of one another.

- Shipping boxes contain sample hardware associated with different applications and without separate packaging to indicate what sample hardware goes with each application.
- Packages of sample hardware received within the same box are not clearly labeled.
- An assembly matrix is not associated with every application (except QA Applications).
- A complete file list is not included in the related documents section of the application.

4.4 Denial of a Project Undergoing NIOSH Evaluation

Some of the reasons why applications may be denied after issuance of a TN include:

- Assembly matrix, exploded-view drawing, approval labels, or major subassembly drawings are incorrect (content or format) or show unapproved assemblies.
- Pre-submission test data is not complete. For example, it does not include total resistance on the complete assembly or all assemblies involved in the submittal(s).
- Sample hardware submitted does not match subassembly drawings, part numbers, or the assembly matrix drawing.
- Drawings are not in accordance with the documentation control procedures stated in the applicant's Quality Assurance Manual.
- Additional information requested by NIOSH is not received within two weeks of the date requested.
- The application is for a new or unique respirator which cannot be approved under current regulations for which there is no existing NIOSH policy (e.g., smoke hoods, SAR with pneumatic tools, etc.).
- Applicant's pre-submission test data indicates that the respirator would fail the NIOSH regulatory test requirements or the appropriate pretest data is not submitted with the application.
- The official submittal either (1) requested approval of two respirators of different basic designs (includes submitting a supplied-air respirator with a regulator along with an alternate that is a regulator with a hot/cold tube in the same application) or (2) requested a new approval and an extension of approval in the same application.
- The Standard Application Form (SAF) has errors, deficiencies, or is incorrect.
- Items on the assembly matrix do not correspond exactly to the "Reason for Application," drawing revision levels are wrong, components on the exploded-view drawing are improperly numbered, or documents are otherwise incorrect.
- Protection or intended use claims have not been requested or approval has not been obtained from other governing agencies (such as MSHA for mining (along with MSHA intrinsic safety)).
- QA documentation does not have sufficient inspections identified, missing required inspection steps, or inspections identified are not sufficient to meet the NIOSH requirements.
- The quality assurance application includes other documents, such as a PQP or inspection procedures, in addition to or instead of the Quality Assurance Manual.

4.5 Respirator Certification (Approval) Program Decision Review Process

NIOSH has a structured Decision Review Process that enables applicants to request a review of decisions regarding NPPTL policy statements, test procedures, and test results pertaining to ongoing respirator certification activities.

Section 5 Supplied-Air Respirator Test Selection Guide

Item	Respirator Type	*NIOSH Test #	Title	Total Materials Needed
7	SCBA - open-circuit, entry, demand Subpart H	TEB-APR-STP-0004	Determination of Exhalation Valve Leakage	2 complete units plus one each of all accessories 3 cylinder gauges, 3 remote gauges, as required
		RCT-ASR-STP-0118	Determination of Low Temperature Operation - Minimum Temperature per Applicant, Open-Circuit, Self-Contained Breathing Apparatus	
		RCT-ASR-STP-0121	Determination of Rated Service Time - Open-Circuit, Demand and Pressure-Demand, Self-Contained Breathing Apparatus	
		RCT-ASR-STP-0122	Determination of Exhalation Breathing Resistance - Open-Circuit, Demand and Pressure-Demand, Self-Contained Breathing Apparatus	
		RCT-ASR-STP-0123	Determination of Gas Flow Measurements - Open-Circuit, Demand and Pressure-Demand, Self-Contained Breathing Apparatus	
		RCT-ASR-STP-0124	Determination of Remaining Service Life Indicator - Open-Circuit, Demand and Pressure-Demand, Self-Contained Breathing Apparatus	
		RCT-ASR-STP-0125	Determination of Gas Tightness - Isoamyl Acetate, (IAA) - Self-Contained Breathing Apparatus with Facepieces and Mouthpieces	
		RCT-ASR-STP-0126	Determination of Bypass Valve Flow - Open-Circuit, Demand and Pressure-Demand, Self-Contained Breathing Apparatus	
		RCT-ASR-STP-0128	Determination of Accuracy of Gauge - Self-Contained Breathing Apparatus	
		RCT-ASR-STP-0132	Determination of Inhalation Breathing Resistance - Open-Circuit, Demand, Self-Contained Breathing Apparatus	
		RCT-ASR-STP-0139	Determination of Facepiece Carbon Dioxide Concentrations - Self-Contained Breathing Apparatus	
		RCT-ASR-STP-0140	Man Tests - Self-Contained Breathing Apparatus	
		RCT-ASR-STP-0145	Determination of Sound Level Measurements for Remaining Service Life Indicators - Self-Contained Breathing Apparatus	

		RCT-ASR-STP-0146	Determination of Diaphragm Over Pressurization - Open Circuit, Self-Contained Breathing Apparatus with Belt Mounted Regulators and Breathing Tubes	
		RCT-ASR-STP-0148	Determination of Remote Gauge Leak-Flow Test - Open-Circuit, Demand And Pressure-Demand, Self-Contained Breathing Apparatus	
		RCT-ASR-STP-0155	Man Test Number 6 - Self-Contained Breathing Apparatus Using Liquefied Gas	
		* Actual tests selected may vary depending on design and intended use.		
Item	**Respirator Type**	***NIOSH Test #**	**Title**	**Total Materials Needed**
8	SCBA - open-circuit, entry, pressure-demand	RCT-ASR-STP-0118	Determination of Low Temperature Operation - Minimum Temperature per Applicant, Open-Circuit, Self-Contained Breathing Apparatus	2 complete units plus one each of all accessories 3 cylinder gauges 3 remote gauges, as required
		RCT-ASR-STP-0120	Determination of Positive Pressure - Open-Circuit, Pressure-Demand, Self-Contained Breathing Apparatus	
		RCT-ASR-STP-0121	Determination of Rated Service Time - Open-Circuit, Demand and Pressure-Demand, Self-Contained Breathing Apparatus	
		RCT-ASR-STP-0122	Determination of Exhalation Breathing Resistance - Open-Circuit, Demand and Pressure-Demand, Self-Contained Breathing Apparatus	
		RCT-ASR-STP-0123	Determination of Gas Flow Measurements - Open-Circuit, Demand and Pressure-Demand, Self-Contained Breathing Apparatus	
		RCT-ASR-STP-0124	Determination of Remaining Service Life Indicator - Open-Circuit, Demand and Pressure-Demand, Self-Contained Breathing Apparatus	
		RCT-ASR-STP-0125	Determination of Gas Tightness - Isoamyl Acetate, (IAA) - Self-Contained Breathing Apparatus with Facepieces and Mouthpieces	
		RCT-ASR-STP-0126	Determination of Bypass Valve Flow - Open-Circuit, Demand and Pressure-Demand, Self-Contained Breathing Apparatus	
		RCT-ASR-STP-0128	Determination of Accuracy of Gauge - Self-Contained Breathing Apparatus	

		RCT-ASR-STP-0139	Determination of Facepiece Carbon Dioxide Concentrations - Self-Contained Breathing Apparatus	
		RCT-ASR-STP-0140	Man Tests - Self-Contained Breathing Apparatus	
		RCT-ASR-STP-0145	Determination of Sound Level Measurements for Remaining Service Life Indicators - Self-Contained Breathing Apparatus	
		RCT-ASR-STP-0146	Determination of Diaphragm Over Pressurization - Open Circuit, Self-Contained Breathing Apparatus with Belt Mounted Regulators and Breathing Tubes	
		RCT-ASR-STP-0148	Determination of Remote Gauge Leak-Flow Test - Open-Circuit, Demand And Pressure-Demand, Self-Contained Breathing Apparatus	
		RCT-ASR-STP-0155	Man Test Number 6 - Self-Contained Breathing Apparatus Using Liquefied Gas	
		* Actual tests selected may vary depending on design and intended use.		
Item	**Respirator Type**	***NIOSH Test #**	**Title**	**Total Materials Needed**
9	SCBA - closed-circuit, entry	RCT-ASR-STP-0117	Determination of Positive Pressure - Closed-Circuit, Pressure-Demand, Self-Contained Breathing Apparatus	2 complete units, plus one each of all accessories 21 scrubbers or O^2 generating canisters **or** 21 fully charged O_2 cylinders **plus** 1 breathing bag 1 relief valve override tool (if needed) 3 cylinder gauges 3 remote gauges (if needed)
		RCT-ASR-STP-0121A	Determination of Rated Service Time - Closed-Circuit, Demand and Pressure-Demand, Self-Contained Breathing Apparatus	
		RCT-ASR-STP-0124A	Determination of Alarm Pressure - Closed-Circuit, Demand and Pressure-Demand, Self-Contained Breathing Apparatus	
		RCT-ASR-STP-0125	Determination of Gas Tightness - Isoamyl Acetate, (IAA) - Self-Contained Breathing Apparatus with Facepieces and Mouthpieces	
		RCT-ASR-STP-0127	Determination of Bypass Valve Flow - Closed-Circuit, Demand and Pressure-Demand, Self-Contained Breathing Apparatus	
		RCT-ASR-STP-0128	Determination of Accuracy of Gauge - Self-Contained Breathing Apparatus	
		RCT-ASR-STP-0134	Determination of Gasoline Permeation Test on Breathing Bags - Closed-Circuit, Self-Contained Breathing Apparatus	

		RCT-ASR-STP-0135	Determination of Inhalation and Exhalation Breathing Resistance - Closed-Circuit, Demand And Pressure-Demand, Self-Contained Breathing Apparatus	
		RCT-ASR-STP-0136	Determination of Demand Gas Flow - Closed-Circuit, Demand and Pressure-Demand, Self-Contained Breathing Apparatus	
		RCT-ASR-STP-0137	Determination of Continuous Gas Flow on Constant Flow with Demand Flow - Closed-Circuit, Self-Contained Breathing Apparatus	
		RCT-ASR-STP-0138	Determination of Safety Relief Valve Operation - Closed-Circuit, Demand and Pressure-Demand, Self-Contained Breathing Apparatus	
		RCT-ASR-STP-0139	Determination of Facepiece Carbon Dioxide Concentrations - Self-Contained Breathing Apparatus	
		RCT-ASR-STP-0140	Man Tests - Self-Contained Breathing Apparatus	
		RCT-ASR-STP-0141	Man Test Number 5 - Closed-Circuit, Self-Contained Breathing Apparatus	
		RCT-ASR-STP-0142	Determination of Vibration (Ro-Tap Test) For Man Test Number 1 - Escape, Closed-Circuit, Demand, Self-Contained Breathing Apparatus	
		RCT-ASR-STP-0143	Determination of Low Temperature Operation - Minimum per Manufacturer - Closed-Circuit, Self-Contained Breathing Apparatus	
		RCT-ASR-STP-0144	Determination of Continuous Gas Flow on Constant Flow - Closed-Circuit, Self-Contained Breathing Apparatus	
		RCT-ASR-STP-0145	Determination of Sound Level Measurements for Remaining Service-Life Indicators - Self-Contained Breathing Apparatus	
		RCT-ASR-STP-0146	Determination of Diaphragm Over Pressurization - Open Circuit, Self-Contained Breathing Apparatus with Belt Mounted Regulators and Breathing Tubes	
		RCT-ASR-STP-0148A	Determination of Remote Gauge Leak-Flow Test - Closed-Circuit, Demand and Pressure-Demand, Self-Contained Breathing Apparatus	

		RCT-ASR-STP-0155	Man Test Number 6 - Self-Contained Breathing Apparatus Using Liquefied Gas	
		NOTE: Rated service time is tested during Man Test 4, assuming that all previous Man Tests have been satisfactorily completed.		
		* Actual tests selected may vary depending on design and intended use.		
Item	**Respirator Type**	***NIOSH Test #**	**Title**	**Total Materials Needed**
11	SCBA - open-circuit escape, demand	RCT-ASR-STP-0118	Determination of Low Temperature Operation - Minimum Temperature per Applicant, Open-Circuit, Self-Contained Breathing Apparatus	2 complete units plus one each of all accessories 3 cylinder gauges
		RCT-ASR-STP-0121	Determination of Rated Service Time - Open-Circuit, Demand and Pressure-Demand, Self-Contained Breathing Apparatus	
		RCT-ASR-STP-0122	Determination of Exhalation Breathing Resistance - Open-Circuit, Demand and Pressure-Demand, Self-Contained Breathing Apparatus	
		RCT-ASR-STP-0123	Determination of Gas Flow Measurements - Open-Circuit, Demand and Pressure-Demand, Self-Contained Breathing Apparatus	
		RCT-ASR-STP-0125	Determination of Gas Tightness - Isoamyl Acetate, (IAA) - Self-Contained Breathing Apparatus with Facepieces and Mouthpieces	
		RCT-ASR-STP-0128	Determination of Accuracy of Gauge - Self-Contained Breathing Apparatus	
		RCT-ASR-STP-0132	Determination of Inhalation Breathing Resistance - Open-Circuit, Demand, Self-Contained Breathing Apparatus	
		RCT-ASR-STP-0139	Determination of Facepiece Carbon Dioxide Concentrations - Self-Contained Breathing Apparatus	
		RCT-ASR-STP-0140	Man Tests - Self-Contained Breathing Apparatus	
		* Actual tests selected may vary depending on design and intended use.		
Item	**Respirator Type**	***NIOSH Test #**	**Title**	**Total Materials Needed**
12	SCBA - open-circuit escape, pressure-demand	RCT-ASR-STP-0118	Determination of Low Temperature Operation - Minimum Temperature per Applicant, Open-Circuit, Self-Contained Breathing Apparatus	2 complete units plus one each of all accessories 3 cylinder gauges
		RCT-ASR-STP-0120	Determination of Positive Pressure - Open-Circuit, Pressure-Demand, Self-Contained Breathing Apparatus	

		RCT-ASR-STP-0121	Determination of Rated Service Time - Open-Circuit, Demand and Pressure-Demand, Self-Contained Breathing Apparatus	
		RCT-ASR-STP-0123	Determination of Gas Flow Measurements - Open-Circuit, Demand and Pressure-Demand, Self-Contained Breathing Apparatus	
		RCT-ASR-STP-0125	Determination of Gas Tightness - Isoamyl Acetate, (IAA) - Self-Contained Breathing Apparatus with Facepieces and Mouthpieces	
		RCT-ASR-STP-0128	Determination of Accuracy of Gauge - Self-Contained Breathing Apparatus	
		RCT-ASR-STP-0139	Determination of Facepiece Carbon Dioxide Concentrations - Self-Contained Breathing Apparatus	
		RCT-ASR-STP-0140	Man Tests - Self-Contained Breathing Apparatus	
		* Actual tests selected may vary depending on design and intended use.		
Item	**Respirator Type**	***NIOSH Test #**	**Title**	**Total Materials Needed**
13	SCBA - open-circuit escape, constant flow	RCT-ASR-STP-0114	Determination of Sound-Level Measurement - Escape, Open-Circuit, Self-Contained Breathing Apparatus Using Hoods or Helmets	3 complete units
		RCT-ASR-STP-0115	Determination of Rated Service Time - Constant-Flow, Escape, Open-Circuit, Self-Contained Breathing Apparatus	
		RCT-ASR-STP-0116	Determination of Airflow Resistance - Continuous-Flow, Escape, Open-Circuit, Self-Contained Breathing Apparatus With Hoods	
		RCT-ASR-STP-0118	Determination of Low Temperature Operation - Minimum Temperature per Applicant, Open-Circuit, Self-Contained Breathing Apparatus	
		RCT-ASR-STP-0125A	Determination of Gas Tightness - Isoamyl Acetate, (IAA) - Self-Contained Breathing Apparatus with Hoods or Helmets	
		RCT-ASR-STP-0128	Determination of Accuracy of Gauge - Self-Contained Breathing Apparatus	
		RCT-ASR-STP-0132	Determination of Inhalation Breathing Resistance - Open-Circuit, Demand, Self-Contained Breathing Apparatus	
		RCT-ASR-STP-0139	Determination of Facepiece Carbon Dioxide Concentrations - Self-Contained Breathing Apparatus	

		RCT-ASR-STP-0140	Man Tests - Self-Contained Breathing Apparatus	
		* Actual tests selected may vary depending on design and intended use.		
Item	**Respirator Type**	***NIOSH Test #**	**Title**	**Total Materials Needed**
14	SA Type C-CE, demand Subpart J	TEB-APR-STP-0004	Determination of Exhalation Valve Leakage	2 complete units plus one each of all accessories All combinations of the maximum length of hose made up from the minimum hose lengths **plus** All necessary quick-disconnects 2 additional 25 foot lengths of air-line hose
		RCT-ASR-STP-0100	Determination of Strength of Hoses and Couplings - Type C and CE Supplied-Air Respirators	
		RCT-ASR-STP-0101	Determination of Tightness of Hoses and Couplings - Type C and CE, Supplied-Air Respirators	
		RCT-ASR-STP-0102	Determination of Nonkinkability of Hoses - Type C and CE, Supplied-Air Respirators	
		RCT-ASR-STP-0103	Determination of Gasoline Permeation of Hoses and Couplings - Type C, and CE, Supplied-Air Respirators	
		RCT-ASR-STP-0104	Determination of Air-Regulating Valve 100,000 Cycles Performance - Demand and Pressure-Demand, Type C and CE, Supplied-Air Respirators	
		RCT-ASR-STP-0105A	Determination of Airflow - Demand and Pressure-Demand, Type C and CE, Supplied-Air Respirators	
		RCT-ASR-STP-0108	Determination of Inhalation Airflow Resistance - Demand, Type C and CE, Supplied-Air Respirators	
		RCT-ASR-STP-0109	Determination of Exhalation Airflow Resistance - Demand, Type C and CE, Supplied-Air Respirators	
		RCT-ASR-STP-0110	Determination of Gas-Tightness Test - Isoamyl Acetate, (IAA) - Type C, and CE, Supplied-Air Respirators	
		NOTE: For abrasive blast, type CE, supplied-air respirators, perform all above tests **plus**		
		RCT-ASR-STP-0112	Determination of the Level of Protection Provided by Abrasive Blast, Type CE, Supplied-Air Respirators Using a Challenge Aerosol of NaCl (Sodium Chloride) or Corn Oil	
		* Actual tests selected may vary depending on design and intended use		
Item	**Respirator Type**	***NIOSH Test #**	**Title**	**Total Materials Needed**
15	SA Type C-CE, pressure-demand	TEB-APR-STP-0004	Determination of Exhalation Valve Leakage	All combinations of the maximum length of hose made up from the minimum hose lengths **plus** All necessary quick-disconnects 2 additional 25-foot lengths of airline hose
		RCT-ASR-STP-0100	Determination of Strength of Hoses and Couplings - Type C and CE Supplied-Air Respirators	

		RCT-ASR-STP-0101	Determination of Tightness of Hoses and Couplings - Type C and CE, Supplied-Air Respirators	All combinations of the maximum length of hose made up from the minimum hose lengths **plus** All necessary quick-disconnects 2 additional 25-foot lengths of airline hose
		RCT-ASR-STP-0102	Determination of Nonkinkability of Hoses - Type C and CE, Supplied-Air Respirators	
		RCT-ASR-STP-0103	Determination of Gasoline Permeation of Hoses and Couplings - Type C, and CE, Supplied-Air Respirators	
		RCT-ASR-STP-0104	Determination of Air-Regulating Valve 100,000 Cycles Performance - Demand and Pressure-Demand, Type C and CE, Supplied-Air Respirators	
		RCT-ASR-STP-0105A	Determination of Airflow - Demand and Pressure-Demand, Type C and CE, Supplied-Air Respirators	
		RCT-ASR-STP-0106	Determination of Inhalation Airflow Resistance - Pressure-Demand, Type C and CE, Supplied-Air Respirators	
		RCT-ASR-STP-0107	Determination of Exhalation Airflow Resistance - Pressure-Demand, Type C and CE, Supplied-Air Respirators	
		RCT-ASR-STP-0110	Determination of Gas-Tightness Test - Isoamyl Acetate, (IAA) - Type C, and CE, Supplied-Air Respirators	
		NOTE: For abrasive blast, type CE, supplied-air respirators, perform all above tests **plus**		
		RCT-ASR-STP-0112	Determination of the Level of Protection Provided by Abrasive Blast, Type CE, Supplied-Air Respirators Using a Challenge Aerosol of NaCl (Sodium Chloride) or Corn Oil	
		* Actual tests selected may vary depending on design and intended use.		
Item	**Respirator Type**	***NIOSH Test #**	**Title**	**Total Materials Needed**
16	SA Type C-CE, constant flow	TEB-APR-STP-0004	Determination of Exhalation Valve Leakage	2 complete units plus one each of all accessories
		RCT-ASR-STP-0100	Determination of Strength of Hoses and Couplings - Type C and CE Supplied-Air Respirators	All combinations of the maximum length of hose made up from the minimum hose lengths **plus** All necessary quick-disconnects 2 additional 25-foot lengths of airline hose
		RCT-ASR-STP-0101	Determination of Tightness of Hoses and Couplings - Type C and CE, Supplied-Air Respirators	
		RCT-ASR-STP-0102	Determination of Nonkinkability of Hoses - Type C and CE, Supplied-Air Respirators	

		RCT-ASR-STP-0103	Determination of Gasoline Permeation of Hoses and Couplings - Type C, and CE, Supplied-Air Respirators	
		RCT-ASR-STP-0105	Determination of Airflow - Continuous Flow, Type C and CE, Supplied-Air Respirators	
		RCT-ASR-STP-0110	Determination of Gas-Tightness Test - Isoamyl Acetate, (IAA) - Type C, and CE, Supplied-Air Respirators	
		RCT-ASR-STP-0111	Determination of Air Velocity and Noise Levels - Sound Level, Type C and CE, Supplied-Air Respirators	
		RCT-ASR-STP-0113	Determination of Airflow Resistance - Continuous-Flow, Type C and CE, Supplied-Air Respirators	
		NOTE: For abrasive blast, type CE, supplied- air respirators, perform all above tests **plus**		
		RCT-ASR-STP-0112	Determination of the Level of Protection Provided by Abrasive Blast, Type CE, Supplied-Air Respirators Using a Challenge Aerosol of NaCl (Sodium Chloride) or Corn Oil	
		* Actual tests selected may vary depending on design and intended use.		
Item	**Respirator Type**	***NIOSH Test #**	**Title**	**Total Materials Needed**
18	Combinations of any respirators in this guide	All tests for each category as appropriate **plus**		All samples for each category as appropriate
		For combination SCBA/SAR:		
		RCT-ASR-STP-0119	Determination of Low-Temperature Operation - Minimum Temperature per Applicant, Combination, Open-Circuit, Self-Contained Breathing Apparatus and Type C, and CE, Supplied-Air Respirators	
		RCT-ASR-STP-0147	Determination of Mode Transfer Test - Combination, Open-Circuit, Self-Contained Breathing Apparatus and Supplied-Air Respirators (SCBA/SAR)	
		For Combination SAR/AP:		
		RCT-APR-STP-0014	Determination of Leakage Of Drinking Tube and Accessories for Respirator Facepieces	
		* Actual tests selected may vary depending on design and intended use		

Section 6 Supplied-Air Respirator and Combination Supplied-Air Respirator/Self-Contained Breathing Apparatus Checklists

The following checklists will be used by NIOSH to review submitted documents for compliance to this procedure and 42 CFR Part 84. It is recommended that applicants review their documents using these checklists prior to submitting them to NIOSH. These checklists may not be all-inclusive.

6.1 NIOSH Respirator Application Checklist

1. _____ The AAR# is unique to the application.
2. _____ All the applicable sections of the SAF are complete.
3. _____ The "Reason for Application" accurately reflects why the application is being submitted (e.g., New Approval, Extension of Approval, Quality Assurance Approval, Correlation Testing Only, Resubmission of a New Approval, Resubmission of an Extension of Approval, or Amended Application).
4. _____ The NIOSH TN where this (these) respirator(s) were last tested has been identified.
5. _____ All the files included with the application are listed in the SAF.
6. _____ All the files supplied are in the acceptable file formats.
7. _____ All the files are properly identified/listed in the SAF.

If Test Samples (Hardware) shipped under separate cover

8. _____ Shipped under a separate cover.
9. _____ The individual test samples (hardware) for evaluation are identified with the AAR# and part numbers as listed on the assembly matrix.
10. _____ The individual test samples (hardware) for evaluation are referenced on the assembly matrix as listed on the assembly matrix.
11. _____ The shipping container/box is marked with the associated AAR# and/or TN.
12. _____ The testing samples (hardware) package includes a packing slip identifying the item(s) and quantity(ies) shipped.

Fees

13. _____ The application fee check or electronic funds transfer (Pay.Gov) receipt for $200 is included.
14. _____ The fee check is dated less than 30 days before the submission date of the application.
15. _____ The check is payable to NIOSH.
16. _____ The check includes the EIN, if a U.S. company or subsidiary.
17. _____ The check includes the AAR#.

Assembly Matrix

18. _____ The assembly matrix matches what is listed in the "Reason for Application" section of the SAF. All applications, except QA Applications, require an assembly matrix.
19. _____ The assembly matrix and SAF represent the actual configuration of the new or modified approval.
20. _____ The "Reason for Application" accurately reflects what is being requested (e.g., New Approval, Extension of Approval, Quality Assurance Approval, Correlation Testing Only

Approval, Resubmission of a New Approval, Resubmission of an Extension of Approval, or Amended Application).

21. _____ R's are placed in the boxes that are associated with any change to the referenced components, including drawings, PQP's, inspection procedures, or any other documents.

Drawings

22. _____ The necessary new or revised drawings are included in the application documents.
23. _____ The revision levels on all drawings match those listed on the assembly matrix.
24. _____ Item numbers on the exploded-view drawing match the item numbers on the assembly matrix.
25. _____ All required information is present on the Supplied-Air Respirator drawings, as indicated on the appropriate checklists.

Labels

26. _____ All applicable draft approval labels are included with the application (respirator, along with other labels as required).
27. _____ The assemblies identified on the label match those identified on the matrix (or matrices) with the possible exception of accessories and User Instructions.
28. _____ The abbreviated labels, primary company, and private label company, if applicable, are listed and shown on page two of the applicable drawings.
29. _____ All the part numbers on the approval labels match the part numbers listed in the applicableassembly matrix.

Cautions and Limitations

30. _____ All appropriate cautions and limitations statements are identified on the individual approvals.
31. _____ All cautions and limitations statements referred to on the approvals are stated on the label(s).

User Instructions

32. _____ The User Instructions include all the required information e.g., OSHA 1910.134 statement on fit testing, donning instructions, assembly instructions, additional warnings and cautions, private label statement (as required), name and contact information of the appropriate company.

Final Review of Application Documents

33. _____ All documents have been verified for the correct revision numbers and the revision levels match what is listed in the SAF.
34. _____ Pre-submission testing indicating that all performance requirements specified in 42 CFR Part 84 is provided in the application and is complete.

6.2 Exploded-View Drawing Checklist for a Supplied-Air and Combination Supplied-Air/SCBA

1. _____ Drawing contains all major subassemblies and accessories that appear on the assembly matrix (except the User Instructions).
2. _____ Parts that are obsolete from the matrix should not appear on the exploded-view drawing.
3. _____ The reference numbering on the exploded-view drawing matches the reference numbering on the assembly matrix. All matrix assemblies are represented on the exploded-view drawing and there are no extra assemblies on the exploded-view drawing. For every reference number on the drawing there is a corresponding number on the matrix, and vice versa.
4. _____ The drawing is properly titled, signed/initialed, numbered, dated, and contains a revision level.
5. _____ There are no reference dimensions on the drawing.

6.3 All Major Subassemblies Checklist for a Supplied-Air and Combination Supplied-Air/SCBA

1. _____ Numbered, titled, signed/initialed by an authorized representative, with an effective date and revision level.
2. _____ Dimensions: length, width, or diameter, as applicable are referenced.
3. _____ Material specifications or vendor part number is listed.
4. _____ Part number location is listed.
5. _____ Serial number location, if applicable, is listed.
6. _____ Critical and major characteristics must be identified on the drawing or on a separate document.
7. _____ Inspection procedures or classification of defects are identified on the drawing or in additional documentation provided with the drawing.
8. _____ Expiration date is indicated, if applicable.

6.4 Supplied-Air Respirator

Respiratory Inlet Covering (Facepiece/Hood/Helmet)

1. _____ Lens has statement on impact resistance GGG-M-125d, Oct. 11, 1965 (amended July 30, 1969). Does not apply to types A, AE, B, and BE.

Air Supply Valve/Orifice/Demand or Pressure-Demand Regulator

1. _____ Parts list showing all parts that make up the air supply valve/orifice/regulator.

Hose/Couplings

1. _____ Couplings must be specified by both type and manufacturer, even if the type is a manufacturer name (example: Foster-Schrader which NIOSH would interpret to be a Schrader style/compatible coupler manufacturer by Foster). The specific model or part number must be identified; "or equivalent" cannot be used
2. _____ Maximum pressure rating of hose.

Breathing Tube

1. _____ Inspection procedures or classification of defects include a method for checking the clamps on the breathing tube.

6.5 Self-Contained Breathing Apparatus

1. _____ Confirm that any materials used in the construction of the respirator which may be exposed to oxygen pressures above atmospheric pressure are safe and compatible for their intended use (e.g., exposure to elevated concentrations of oxygen).

Cylinder & Valve

1. _____ Burst disc pressure is given on the drawing, or there is a note that states that it meets CGA S-1.1 6.3. Requirement is 90 to 100% of 5/3 service pressure:
    - Cylinder fill pressure x 5 ÷ 3 = upper limit.
    - Highest pressure x .90 = lower limit.
2. _____ Torque requirement for connection of cylinder valve to cylinder is listed.
3. _____ Cylinder construction (material(s) of construction, fiber reinforced, type of fiber) is listed.
4. _____ Full cylinder volume at operating pressure - Compressed Air Volume is listed.
5. _____ Markings on cylinder: compressed breathing air, compressed breathing oxygen, liquefied breathing air, or liquefied breathing oxygen, adhere to U.S. DOT marking requirements.
6. _____ Pressure-gauge range has a scale reliable to within + or - 5% of full scale (minimum of five graduations empty, 1/4, 1/2, 3/4, full).
7. _____ Where pressurized oxygen is used, the gauge must have the words “Oxygen” and “Use No Oil.” Also, if it is a closed-circuit unit with oxygen, all materials must be compatible for use with oxygen.
8. _____ Procedure to assure proper gas mixture for refill purposes (percent oxygen) is included. Applies to specialty gases only; does not apply to Grade D air.
9. _____ Specification and dimensions of outlet threads are identified are listed.

Respiratory Inlet Covering (Facepiece)

1. _____ If a pressure-demand valve, shows it is spring loaded.
2. _____ Lens meets impact resistance GGG-M-125d Oct. 11, 1965 (amended July 30, 1969).
3. _____ Lens has statement if anti-fog is needed or not.
4. _____ Statement to indicate if and when nose cup assembly is needed.

6.6 Self-Contained Breathing Apparatus

Backpack Harness Assembly

1. _____ Inspection procedures or classification of defects include a visual inspection of the buckles.
2. _____ Location of NIOSH harness label is indicated.

Pneumatic Assembly

1. _____ For all compressed gas SCBA, a statement that it has an in-line filter downstream of the air source that will effectively remove particles from the gas stream (42 CFR Section 84.87).
2. _____ Type of connections on SAR hose (for an SCBA/SAR combination) is listed.
3. _____ Pressure-gauge range has a scale reliable to within + or - 5% of full scale (minimum of five graduations: empty, 1/4, 1/2, 3/4, full).
4. _____ When pressurized oxygen is used, gauge has the words “Oxygen” and “Use No Oil.”
5. _____ Statement showing all SCBA components critical to the performance of the respirator will function at the minimum temperature, including seals and O-rings (42 CFR 84.98).
6. _____ Statement as to how the remote pressure gauge is attached, i.e., loctite or torque.
7. _____ Parts list showing all parts and materials of the pneumatic assembly.

First Stage Regulator

1. _____ Intermediate Pressure Range is listed is listed.
2. _____ Regulator is designed to fail in the open position.

Second Stage Regulator Assembly

1. _____ Parts list showing all parts and materials of the regulator is included.
2. _____ If a belt mounted regulator assembly, a pressure relief valve is required along with a statement of diaphragm over pressurization requirement.

6.7 Private Label Checklist for a Supplied-Air Respirator and Combination Supplied-Air Respirator/Self-Contained Breathing Apparatus Checklist

1. _____ An assembly matrix showing private label version under current approval (TC) number is included.
2. _____ If private label SAR is a different model/part number than primary approval holder's number, part number and description are in a new separate column on the matrix.
3. _____ If the private label is the same model/part number as the primary approval holder's model/part number, the approval holder name and private label company name are in the description column of the primary Supplied-Air Respirator model/part number.
4. _____ The harness private label is included on page two of the applicable drawing.
    - A. _____ Harness label must include the following items:
        - a. Private label company name.
        - b. NIOSH printed in block letters.
        - c. Appropriate approval (TC) number.
        - d. Protection (SA, PD, DE, etc.).
        - e. Model or part number.
    - B. _____ A draft of the full private label approval label is included and includes cautions and limitations special "S."
    - C. _____ Private label User Instructions are included.
    - D. _____ "S" Special User Instructions section is required with the statement: Model nnnn Supplied-Air Respirator has been manufactured by approval holder xxx for private label company yyyy under TC-19C-nnnn.
    - E. _____ Contact information and a contact person must be identified either in the application or on a separate sheet.

6.8 Document Examples for Supplied-Air Respirators and Combination Supplied-Air Respirators/Self-Contained Breathing Apparatus

This checklist corresponds to the Example Assembly Matrix in Section 7.5

1. _____ The title of the document is indicated on the top of the page.
2. _____ The assembly matrix has the following information in the top right corner of the page:
    a. Title.
    b. Applicant's name and address.
3. _____ The following is indicated below the key box:
    a. Date.
    b. Revision level, if applicable.
4. _____ New drawings submitted with the application or the drawing revision level reflects the current revision level on file at NIOSH. If the drawing has changed from what is currently on file at NIOSH, the altered drawing needs submitted with the appropriate revision level noted. If the drawing is within another application at NIOSH, this information must be identified in the "Reason for Application" section.
5. _____ The numbering system used for assemblies shown on the matrix and exploded-view drawing match.
6. _____ The part number marked on the component must appear in the part number row (model numbers optional).
7. _____ Features that describe the respirator are not listed as a separate column on the matrix. Features associated with specific model numbers may be coupled together in the description (e.g., Model 1201 with hot/cold tube).
8. _____ Top row **(A)** must be a general category, i.e., facepiece, etc. Accessories must be included. "Alternate" will be in the column heading if there are more than one of the same assemblies.
9. _____ The NIOSH TN **(B)** where the component was last tested is listed in the bottom row. If new, indicate N.
10. _____ The AAR# **(C)** appears in the first column from the left.
11. _____ The TC number **(D)** appears in the second column from left.
    a. A new TC number is listed in the proper format: schedule# and AAR# followed by an alpha character.
    b. List "TC-" only in the category heading.
12. _____ The list of protections **(E)** appears in the third column from left.
    a. Verify the list matches the protections listed in the SAF. See the complete list of protections and cautions and limitations.
13. _____ The key box **(F)** must use only the characters X, N, P, R, -, or A.
14. _____ TN/AAR# of the previously approved/pending matrix **(G)** is noted above the right-hand side of the table.
15. _____ Current exploded-view drawing number **(H)** and revision is located directly below the TN/AAR# of the previously approved/pending matrix.
16. _____ A column for the part number/revision level of the User Instructions must be used.

Section 7 - Documents Examples for a Supplied-Air Respirator

7.1 Example Supplied-Air Respirator Product Quality Plan

Double Wing Manufacturing, Pittsburgh, PA **Product Quality Plan (PQP)**

DWFP Air Line Respirator **Revision A, Date: 7/21/2015**

Item	Description	Inspection	Class	Location	AQL	Test Method	Recorded Results
1	Full Facepiece	Assembly Correct	Major A	Assembly Station	100%	Visual	Assembly Station
		Facepiece Leak Test	Major A	Assembly Station	100%	TP-00LT	
		Valve Leak Test	Major B	Assembly Station	2.5%	TP-00VL	
2	Breathing Tube	Assembly Correct	Major A	Assembly Station	100%	Visual	Assembly Station
		Flow Test	Minor	Assembly Station	4%	TP-00BT	
3	Flow Controller	Flow Test	Major A	Assembly Station	100%	TP-00FC	Assembly Station
4	Air-line Hose	Assembly Correct	Major A	Assembly Station	1%	Visual	Assembly Station
		Leak Test	Major B	Assembly Station	2.5%, Destructive	TP-00LH	
		Pull Test	Major B	Assembly Station	2.5%, Destructive	TP-00PT	
5	Belt	Assembly Correct	Minor	Assembly Station	4%	Visual	Assembly Station
6	Accessory, Spectacle Kit	Assembly Correct	Minor	Incoming Inspection	4%	Visual	Incoming Inspection

7.2 Example Product Quality Plan for Self-Contained Breathing Apparatus Respirators

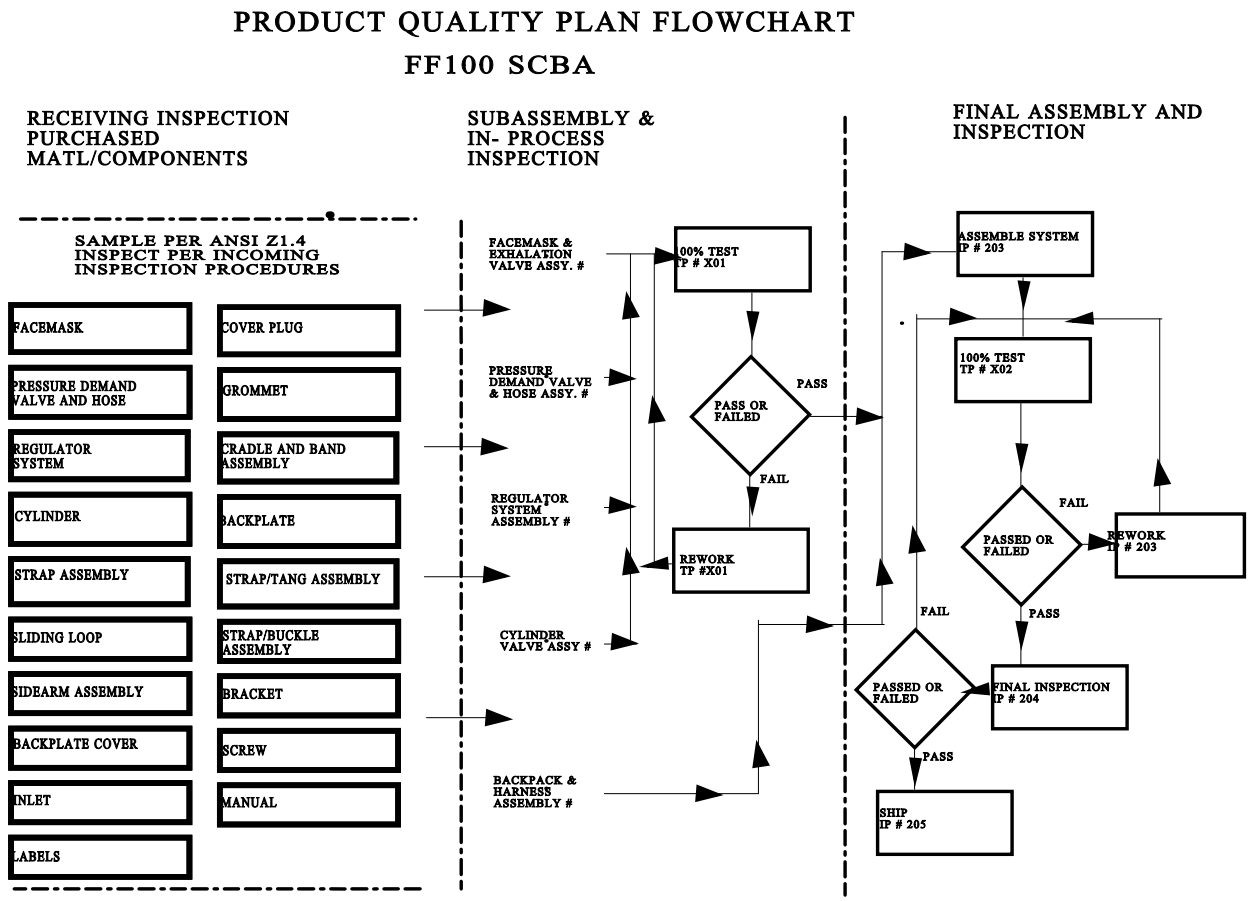

7.3 Example of an Exploded-View Drawing for a Supplied-Air Respirator

Item	Description	Part Number
1	Full Facepiece	123FP
2	Breathing Tube	234BT
3	Flow Controller	345FC
4	Supply Hose	456SH
5	Belt	567BT
6	Accessory, Spectacle Kit	678AS
X	User Instructions	UI001

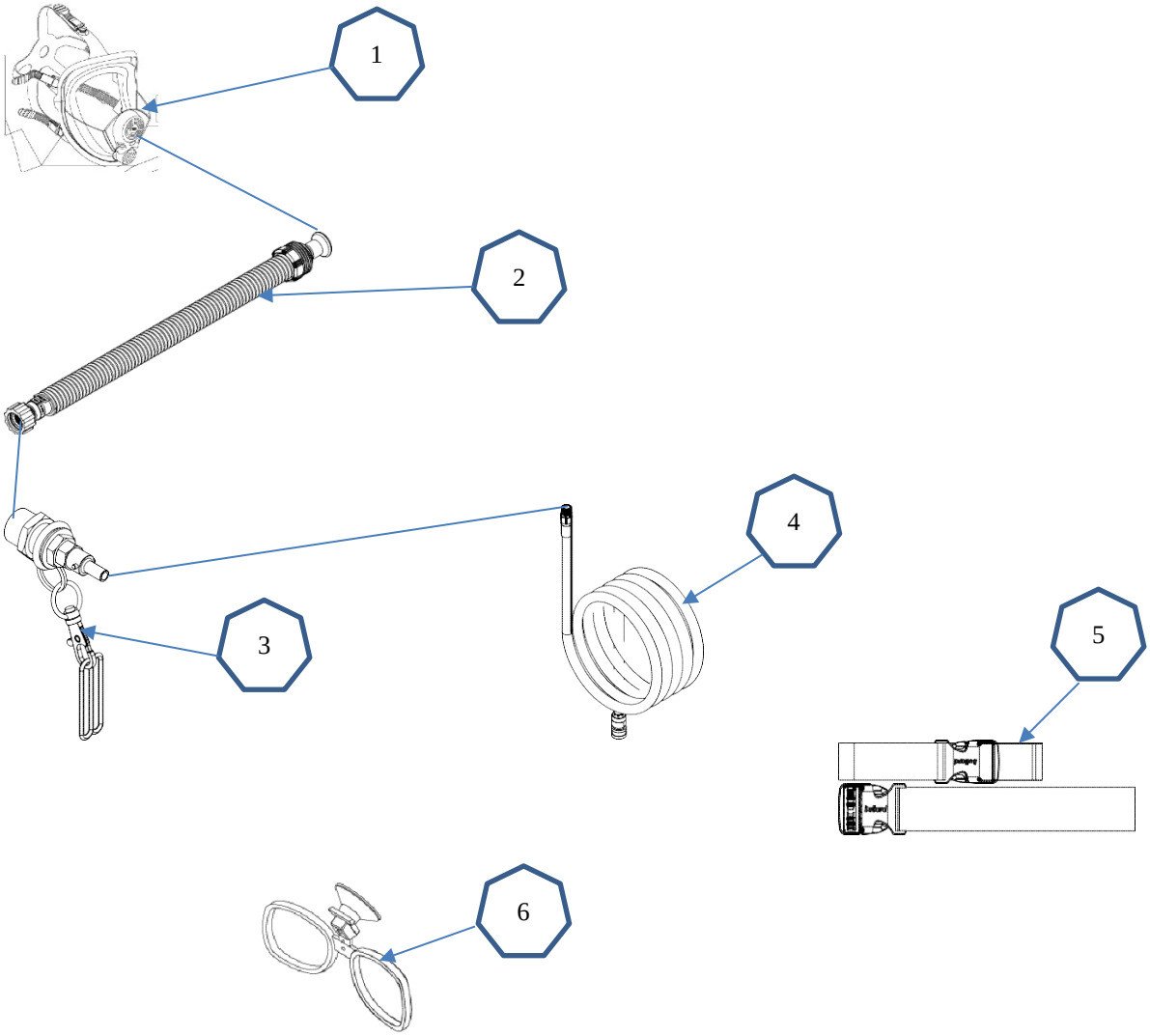

Approved	Double Wing Manufacturing, Pittsburgh, PA		
Drawing: DWW 7/25/2015	Part Number:		Title: LWFP Airline Respirator, Exploded-View
Release: DDW 7/26/2015	Scale: NTS	Revision: 0	Drawing Number DWM003

7.4 Example of an Exploded-View Drawing for a Full Facepiece Combination Supplied-Air and Self-Contained Breathing Apparatus

Item	Part Number	Description
1	1000	Facepiece
2	R333	Second Stage Regulator
3	IH333	Intermediate Hose
4	FR333	First Stage Regulator
5	C004	Cylinder
6	PG004	Gauge Unit
7	H99	Harness
8	AL001-XX	Air-Line Hose
9	ALC002	Air-Line Connection
X	UI003	User Instructions

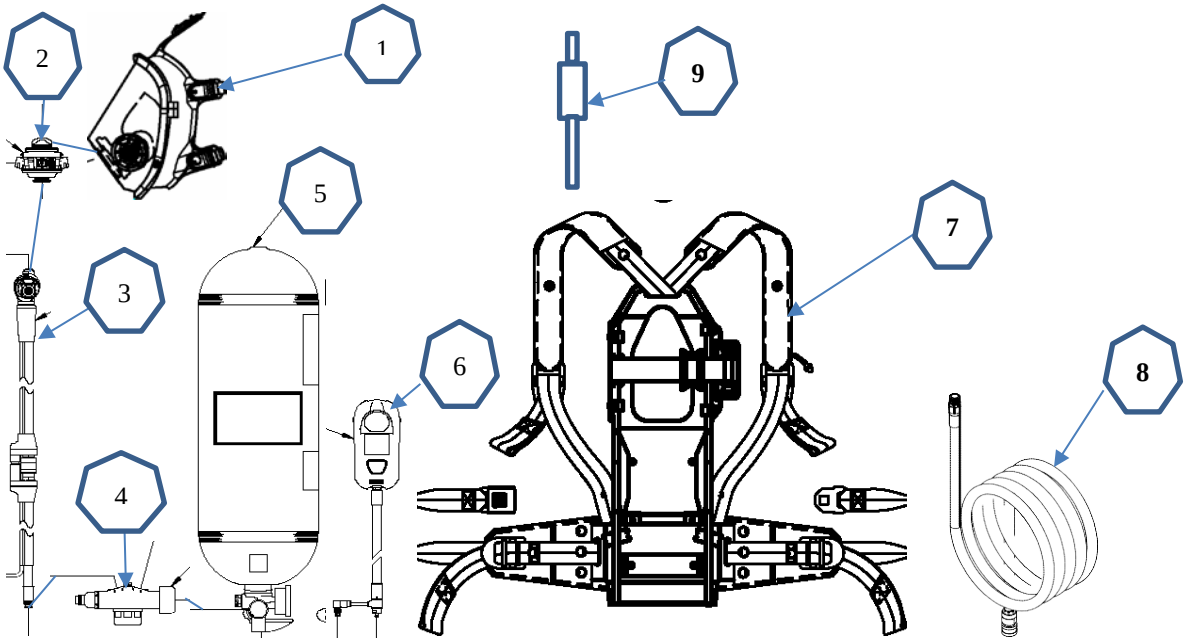

Approved	Double Wing Manufacturing, Pittsburgh, PA		
Drawing: DWW 8/25/2015	Part Number: Model FF100SA		Title: Supplied-Air/SCBA Combination
Release: DDW 8/26/2015	Scale: NTS	Revision: 0	Drawing Number DWM007

7.5 Example Assembly Matrix Combination SAR and SCBA Respirators

Key:
X = currently approved in this configuration
N = New Component or Configuration
"-" = Obsolete
R = Redesign
P = Pending
A = Accessory

Double Wing Manufacturing
123 Manufacturer Lane
Pittsburgh, PA USA
Phone: 412-555-1212

(G) TN or AAR # of a previously approved or pending matrix: N/A

(H) N/A see exploded-view drawing for each respirator configuration
Exploded-view drawing number: LWM007

Date: August 1, 2015
Revision: 0

			Item	7	1	5	8		2	4	6	9	3	X
			Description	Harness	Facepiece	Cylinder	Alternate Hoses/Length		Second Stage Regulator	First Stage Regulator	Gauge Unit	Airline Connection	Intermediate Hose	User Instructions
							a	b						
			Revision	1	2	2	0		0	0	1	2	1	0
AAR# (**C**)	NIOSH Approval Number TC- **(D)**	Protection **(E)**	Drawing Number	DR H99	DR FP10	DRC004	DR AL 001-50	DR AL 001-100	DR R333	DR FR 333	DR PG 004	DR ALC002	DR IH 333	DN 002 UI
LMW 003	13F-AARa	PD/SA/ESC 5 minutes	Model/Part Number	H99	1000	C004	AL 001-50	AL 001-100	R 333	FR 333	PG 004	ALC 002	IH 333	002 UI
NIOSH Task Number where component was last tested. If new, indicate as ""N"				N	N	N	N	N	N	N	N	N	N	N
			(B)	N	1000	N	N	N	N	N	1001	1001	1001	N

7.6 Example of an Approval Label for a Supplied-Air Respirator with Egress SCBA

Double Wing Manufacturing Company
Almost Heaven, West Virginia, USA
1-800-123-4567
T500 SAR
Type C and CE Continuous Flow Supplied-Air Respirator with 10 Minute Escape Cylinder

These respirators are approved only in the following configurations:

RESPIRATOR COMPONENTS													
TC-	Protection[1]	Harness	Alternate Facepiece			Cylinder		Alternate Hoses/Length			Alternate Regulator		Cautions and Limitations[2]
		CROWN	1000	2000	3000	1001	1002	943-25	943-50	943-100	3021	3022	
13F-AARa	PD/SA/ESC 5 minutes	X	X	X	X	X	X	X	X	X	X	X	ABCDEJLMNOS

1. PROTECTION

PD - Pressure-Demand
SA - Supplied-Air
ESC - Escape-Only

3. CAUTIONS AND LIMITATIONS

A Not for use in atmospheres containing less than 19.5 percent oxygen.
B Not for use in atmospheres immediately dangerous to life or health.
C Do not exceed maximum use concentrations established by regulatory standards.
D Airline respirators can be used only when the respirators are supplied with respirable air meeting the requirements of CGA G-7. Grade D or high quality.
E Use only the pressure ranges and hose lengths specified in the User's Instructions.
J Failure to properly use and maintain this product could result in injury or death.
L Follow the manufacturer's User Instructions for changing cartridges, canister and/or filters.
M All approved respirators shall be selected, fitted, used, and maintained in accordance with MSHA, OSHA, and other applicable regulations.
N Never substitute, modify, add, or omit parts. Use only exact replacement parts in the configuration as specified by the manufacturer.
O Refer to User Instructions, and/or maintenance manuals for information on use and maintenance of these respirators.
S Special or critical User Instructions and/or specific use limitations apply. Refer to User Instructions before donning

7.7 Example of an Approval Label for a Supplied-Air Respirator

Double Wing Manufacturing Company
Almost Heaven, West Virginia, USA
1-800-123-4567
T500 SAR

Type C and CE Continuous Flow Supplied-Air Respirator

These respirators are approved only in the following configurations:

Respirator Components														
TC-	Protection[1]	Model	Facepiece	Hood or Helmet	Flow Regulator and Belt	Cape	Quick Disconnect	Hose 25'	Hose 50'	Breathing Tube	Visor	Inner Lenses	Outer Lenses	Cautions and Limitations[2]
			T200	T100	T28061	T26-1	T28-0	T20-25	T20-50	T16-4	T18-1	T24-0	T24-4	
19C-AARa	SA/CF	T5000 SA		X	X	X	X	X	X	X	X	X	X	BCDEJMNOS
19C-AARb	SA/CF	T5000 SB	X		X		X	X	X	X				BCDEJMNOS

1. PROTECTION

CF - Continuous Flow
SA - Supplied-Air

2. CAUTIONS AND LIMITATIONS

B Not for use in atmospheres immediately dangerous to life or health.
C Do not exceed maximum use concentrations established by regulatory standards.
D Airline respirators can be used only when the respirators are supplied with respirable air meeting the requirements of CGA G-7.1 Grade D or higher quality.
E Use only the pressure ranges and hose lengths specified in the User's Instructions.
J Failure to properly use and maintain this product could result in injury or death.
M All approved respirators shall be selected, fitted, used, and maintained in accordance with MSHA, OSHA, and other applicable regulations.
N Never substitute, modify, add, or omit parts. Use only exact replacement parts in the configuration as specified by the manufacturer.
O Refer to User Instructions, and/or maintenance manuals for information on use and maintenance of these respirators.
S Special or critical User Instructions and/or specific use limitations apply. Refer to User Instructions before donning.

[**Note**: All appropriate cautions and limitations must be listed in a separate section of the User Instructions. This includes air quality requirements, special use instructions, etc.]

Section 8 - Label Format Guidance

- Labels for Supplied-Air Respirators must be completed in the assembly matrix format shown in the preceding examples.
- The TC number is listed in the far left column. For initial submissions the TC number is the schedule# and AAR# followed by an alpha character, exactly as in the assembly matrix. This links the approval label to the application and assembly matrix. Upon approval, NIOSH will insert the TC number. “TC-” can only appear in the column heading, not in the row.
- Protections are the second column from the left.
- Cautions and limitations are the far right column.
- The component columns must list all of the major assemblies and accessories and can be in any order that the applicant chooses.
- Anytime more than one of the same subassemblies for a respirator configuration is listed on the approval label, the subassemblies must be identified as alternate components by adding “Alternate” to the column heading. X is the only character that may be used in the body of the approval label to designate an approved component.
- If a component is offered as an accessory, the category must be labeled as “accessory” (e.g., “Accessory Cover").
- Empty rows are not permitted. Approval labels must not be color coded.
- Wording of the standard protections and Cautions and Limitations must be identical to the NIOSH samples. Only appropriate Cautions and Limitations may be listed. For example, if only Cautions and Limitations A, C, and G apply, then only A, C, and G can be included in the footnote at the bottom of the label.
- The SCBA harness label must clearly indicate the approval holder’s name, address, and phone number, model/trade name, type of protection, TC number, duration-cylinder pressure-type data, appropriate cautions and limitations, reference to the User Instructions for major subassembly and component information, and HHS and NIOSH logos. The entire SCBA or SAR label must appear in the User Instructions.
- Protections on SCBA approval labels, User Instructions and assembly matrices must list the cylinder operating pressure, rated service time, and self-contained code e.g., 2216 psi 30 min SC.
- If all respirators on the label are of the same series or family, text may be added to identify the respirator series or family, e.g., continuous flow, pressure-demand, positive pressure, Type C or Type CE, open circuit, closed circuit, etc. This heading is optional on all approval labels.
- Non-NIOSH approval identifiers cannot be represented on any NIOSH labels. Applicants may use additional areas on the component to identify any other applicable approvals such as the European CE approval. However, this information must be separate from the NIOSH approval label.
- If the label will not fit on the container, it must be included inside the container. If the label is inserted, the container must say “NIOSH-Approved - see insert.” The insert may consist of the approval label or the User Instructions containing the approval label.
- If the respirator is for *escape*-only, the applicant must use the word *escape* on full approval labels. For example, “These escape-only respirators are approved only in the following configurations.” ‘Escape’ may be abbreviated in the protection column, but must be spelled out in the legend. On abbreviated cartridge labels, *escape* must follow each gas and vapor listed. “Esc” is the only acceptable abbreviation for *escape*.

APPENDIX

DEPARTMENT OF HEALTH & HUMAN SERVICES Public Health Service
Centers for Disease Control
and Prevention (CDC)
National Institute for Occupational
Safety and Health (NIOSH)
National Personal Protective
Technology Laboratory (NPPTL)
P.O. Box 18070
Pittsburgh, PA 15236
Phone: 412-386-4000
Fax: 412-386-4051
September 24, 2012

LETTER TO ALL RESPIRATOR MANUFACTURERS

Subject: Sampling Procedures

The National Institute for Occupational Safety and Health (NIOSH) requires that respirator approval holders inspect and/or test samples of respirators and components as part of their quality control plans. This requirement is stated in Title 42, *Code of Federal Regulations*, Part 84 (42 CFR 84), specifically in §§ 84.41(b) through 84.41(i). Some applicants or approval holders have had difficulty understanding how to select and use a sampling procedure which meets the requirements. This letter is intended to explain the practical use of common standard procedures acceptable to NIOSH.

This letter will not discuss statistical theory underlying acceptance sampling. If applicants or approval holders intend to use alternatives to the procedures described here, they must understand the concepts of acceptance sampling and process control. The use of more modern methods such as calculating process capability values (Cpk) or employing statistical process control (SPC) is encouraged where this is compatible with the approval holder's operations and provides equivalent assurance of respirator performance. Justification to demonstrate the equivalence of these procedures must be provided in the application seeking approval.

1. Selection of Sampling Procedures

1.1 Sampling by Variables. The standard sampling procedure specified in 42 CFR Part 84 is MIL-STD-414 [U.S. Department of Defense 1957]. This is a variable sampling plan, which means that the characteristic must be something that can be measured numerically on a continuous scale. Examples include the diameter of a hole in inches, the mass of a cartridge in grams, or the leakage of an exhalation valve in milliliters per minute. This procedure is only valid when the characteristic being measured has a statistically normal distribution over the population being sampled. The ANSI/ASQ Z1.9 standard [American National Standards Institute 2003b] is derived from MIL-STD-414, and NIOSH considers it to be equivalent.

1.2 Sampling by Attributes. The MIL-STD-105D sampling procedure [U.S. Department of Defense 1963] is explicitly accepted as an equivalent procedure in 42 CFR Part 84. This is an attribute sampling plan, which means that each characteristic is simply checked to see whether it is acceptable. Due to its simplicity, this standard and its derivatives are by far the most common in use. It has the advantage that it can be applied to characteristics which do not involve a numerical measurement

(such as visual checks) as well as to those that are measurable. No calculations are needed to determine acceptance, and the procedure is valid whether the Page 2 – Letter to All Respirator Manufacturers 9-2012 characteristic has a normal distribution or not. Typically the sample sizes will be larger than the corresponding variable sampling plan. Procedures derived from this standard, and which NIOSH considers to be equivalent, include MIL-STD-105E [U.S. Department of Defense 1989] and ANSI/ASQ Z1.4 [American National Standards Institute 2003a].

1.3 Zero-Defect Sampling by Attributes. Another attribute sampling plan which NIOSH accepts as equivalent is the Squeglia C=0 procedure [Squeglia 2008]. While not directly derived from MIL-STD-105E, its plans are matched to that procedure and provide an acceptable statistical assurance of lot quality. The chief difference is that in all cases, the lot is only accepted if there are zero defects found in the sample (C=0). This procedure usually requires fewer samples than MIL-STD-105D and related standards, and is the simplest to use of those listed in this letter. However, it is generally only suitable when defects in production are extremely rare.

1.4 Equivalent Standards. The ANSI/ASQ standards mentioned above are revised periodically. In general, NIOSH will consider later editions of a given procedure to be equivalent. There may also be other national or international standards based on MIL-STD-414 or MIL-STD-105D that can be considered equivalent. If such a standard is used, NIOSH may request a copy from the applicant to verify its equivalence.

1.5 Obtaining Sampling Procedure Documents. One feature of MIL-STD plans is that as works of the United States Government, they may be copied free of charge. Those mentioned can be downloaded from the Internet Archive at http://www.archive.org/ and may be available elsewhere. However, all MIL-STD documents in this letter have been cancelled by the Department of Defense and are no longer maintained or revised. The corresponding ANSI/ASQ standards are successors to the MIL-STD documents and have various minor improvements and clarifications added. Copies of these standards may be purchased from the American Society for Quality, the American National Standards Institute, or others who deal in national standards.

2. Acceptable Quality Level (AQL)

- Meaning of AQL. The acceptable quality level is an indicator of the percent defective that can be considered satisfactory for a particular characteristic. Smaller AQL values mean that fewer defectives will be tolerated in an acceptable lot.

- Selection of AQL. The classification of defects document submitted with each application as required by 42 CFR Section 84.41(c) through 84.41(e) must identify the severity level of each characteristic. The AQL to be used for sampling is shown in the table below and is defined in 42 CFR Section 84.41(g). The AQL value does not depend on lot size or any other factor, and it is generally improper to modify the AQL for any reason other than the defect classification.

Defect Classification	**AQL[1,2]**
Major A	1.0
Major B	2.5
Minor	4.0

[1] These are called "index values" in the Squeglia C=0 procedure.
[2] It is acceptable to use a smaller (more stringent) AQL value.

2.3 Critical Characteristics. Characteristics identified as Critical in the classification of defects are not assigned an AQL and are not eligible for any form of sampling. Each item made must be 100% inspected as required by 42 CFR Section 84.41(f) and the entire lot rejected when a defect is found. Any plans to perform rework on the lot must be approved as part of the product quality plan.

2.4 Cross-References. See MIL-STD-414 section A4; ANSI/ASQ Z1.9-2003 sections A2.1, A4; MIL-STD-105D section 4; MIL-STD-105E sections 3.1, 4.4; ANSI/ASQ Z1.4-2003 section 4; Squeglia C=0 pages 3, 6.

3. Inspection Level

3.1 Meaning of Inspection Level. The inspection level decides the number of samples to be drawn for a particular lot size and determines the sampling plan's ability to discriminate between conforming and nonconforming lots. Lower inspection levels increase the risk that a nonconforming lot will be accepted.

3.2 Selection of Inspection Level. The inspection level to be used is shown in the "normal" column of the table below and is defined in 42 CFR Section 84.41(h). As a special exception, NIOSH is permitted under 42 CFR Section 84.41(i) to allow a lower inspection level for destructive testing only. The minimum level NIOSH will accept under this exception is in the "destructive" column. Approval of a level lower than the "normal" level is entirely at NIOSH's option and will only be granted if the rest of the inspection plan ensures adequate control over product quality.

Procedure	**Minimum Inspection Level**	
	Normal	**Destructive**[1]
MIL-STD-414	IV	I
ANSI/ASQ Z1.9-2003	II	S-3
MIL-STD-105D	II	S-2
MIL-STD-105E	II	S-2
ANSI/ASQ Z1.4-2003	II	S-2

[1] Only permitted with specific prior approval from NIOSH.

The Squeglia C=0 procedure does not use the concept of inspection levels and NIOSH treats it as equivalent to inspection level II of MIL-STD-105D.

3.3 Cross-References. See MIL-STD-414 section A7.1; ANSI/ASQ Z1.9-2003 section A7.1; MIL-STD-105D sections 9.2, 9.3; MIL-STD-105E sections 4.9.1, 4.9.2; ANSI/ASQ Z1.4-2003 sections 9.2, 9.3.

4. Normal, Reduced, and Tightened Inspection

4.1 Use of Switching Rules. Most sampling procedures referenced in this letter contain rules allowing reduced inspection under certain conditions. Reduced inspection may be used only when all conditions listed in the switching rules are met. This includes the requirement that production is not irregular or delayed. A history of lot acceptance at one manufacturing site cannot be used to move to reduced sampling at another site. Approval holders may choose to stay at normal inspection even when conditions for reduced inspection are met. However, tightened inspection is not optional and must be used where specified by the rules. The Squeglia C=0 procedure does not recommend switching rules, and reduced inspection is not permitted by NIOSH for that procedure. Tightened inspection is not required for the Squeglia C=0 procedure.

4.2 Records to Support Reduced Inspection. To use reduced inspection, the approval holder must maintain inspection records showing that the conditions in the applicable procedure are met. Such records must be available for review during NIOSH on-site audits.

4.3 Cross-References. See MIL-STD-414 sections A8, B14, C14, D14; ANSI/ASQ Z1.9-2003 section A10; MIL-STD-105D section 8; MIL-STD-105E sections 4.6, 4.7, 4.8; ANSI/ASQ Z1.4-2003 section 8; Squeglia C=0 pages 14, 16.

5. Lots or Batches

5.1 Definition of Lot. Each procedure listed in this letter requires that product be grouped into inspection lots (the term "batch" means the same as "lot"). Each lot consists of product which has been manufactured under essentially the same conditions in the same production facility and at essentially the same time. For example, if a production line is shut down for a week for maintenance, it is wrong to consider product made before and after the shutdown as part of the same lot.

5.2 Selection of Samples from Lot. Each sample drawn from a lot must be representative of the lot. For example, when drawing a sample of 200 pieces from a lot of 10,000 it would be improper to select the first 200 respirators produced to use as the sample. As another example, if respirators being produced on five machines are being combined into an inspection lot, then one- fifth of the sample drawn must come from each machine. As noted in section 6.2 of this letter, each sample taken for double or multiple sampling must be representative of the whole lot.

5.3 Inspection Lot vs. Other Lot Designations. The grouping of finished respirators into lots for shipment or other purposes may differ from the grouping used for inspection. The lot number marked on the respirator or its container, as required by 42 CFR Section 84.33(g), does not necessarily need to be the same number used for inspection purposes. However, the approval holder must maintain traceability between lot numbering systems if more than one is used. For example, a shipping lot number must be traceable to the corresponding production lot number (or numbers).

5.4 Cross-References. See MIL-STD-414 sections A5, A7.2; ANSI/ASQ Z1.9-2003 sections A2.4, A5, A7.2; MIL-STD-105D sections 5, 7.2; MIL-STD-105E sections 3.12, 3.13, 4.3, 4.5.1; ANSI/ASQ Z1.4-2003 sections 5, 7.2; Squeglia C=0 page 2.

6. Specific Considerations for Attribute Plans

6.1 Following Arrows to Select Appropriate Sampling Plan. Where the sampling plan indicated leads to an arrow in the table, follow the arrow to the next available sampling plan. This will point to a new code letter row in the table with the acceptance and rejection numbers and a new corresponding sample size to be used.

As an example, consider sampling of a lot of 200 pieces under MIL-STD-105D for a Major A characteristic at inspection level II. Code letter G is selected from Table I, and an AQL of 1.0 is used. An arrow pointing downward is contained in Table II-A for these conditions, indicating that code letter G is not available and code letter H must be used. This means that the appropriate sample size is 50 pieces, not 32, and that the lot is accepted if there are 0 or 1 defective pieces, and rejected if there are 2 or more defectives.

6.2 Single, Double, or Multiple Sampling. Most attribute procedures include double or multiple sampling plans (the Squeglia C=0 procedure only has single plans). Any of these options included in the procedure

may be selected. Note that each sample drawn must be representative of the entire lot. Double and multiple sampling tend to require fewer samples when lot quality is either much better or much worse than the AQL. Single sampling is simpler to administer and apply correctly than double or multiple sampling and is the overwhelmingly popular choice.

As an example, consider a lot of 200 pieces under MIL-STD-105D for a Minor characteristic at inspection level II. Code letter G is selected from Table I, and an AQL of 4.0 is used. For single sampling, Table II-A indicates that the sample size is 32. The lot is accepted if there are 3 or fewer defective pieces, and it is rejected if there are 4 or more defectives. For double sampling, Table III-A is used instead and an initial sample of 20 would be drawn. The lot is accepted if there are 0 or 1 defectives, and it is rejected if there are 4 or more defectives. If there are 2 or 3 defectives, then a second sample of 20 is drawn from the lot and inspected. If after both samples (totaling 40 pieces) are inspected there are a total of 4 or fewer defectives, then the lot is accepted; if 5 or more defectives, then the lot is rejected. Multiple sampling (Table IV-A) works in a similar fashion, except that there are up to seven rounds of sampling to reach a decision.

6.2.1 Cross-References. See MIL-STD-105D sections 7.4, 9.5, 10.1.1, 10.1.2, 10.1.3; MIL-STD-105E sections 4.5.3, 4.9.4, 4.10.1.1, 4.10.1.2, 4.10.1.3; ANSI/ASQ Z1.4-2003 sections 7.4, 9.5, 10.1.1, 10.1.2, 10.1.3.

7. Specific Considerations for Variable Plans

7.1 Variability Unknown vs. Variability Known. A variability unknown method should normally be used. The variability known method may only be used when the production process is under strict control and the process parameters influencing final respirator performance are well understood. Data must be provided with the application for approval, available during on- site audits, and continuously updated to support the standard deviation value (σ) used.

7.2 Single Specification Limit vs. Double Specification Limit. This is selected on the basis of whether there is only one limit value (such as penetration less than or equal to 5%) or two limit values (such as cartridge mass between 95 and 105 grams) for the characteristic.

7.3 Standard Deviation Method vs. Range Method. Either method may be selected. The standard deviation method generally requires fewer samples, but more complex computations.

7.4 Form 1 vs. Form 2. The two forms are equivalent and either one may be selected. Form 2 is recommended as it yields figures which must be calculated anyway to satisfy the switching rules.

7.5 Cross-References. See MIL-STD-414 Introduction, section A6.2; ANSI/ASQ Z1.9-2003 Introduction, section A6.2.

8. Scope

8.1 Limitation to Approved Quality Control Plans. Approval holders may perform additional testing and inspection not listed in their approved quality control plans. Sampling for these additional inspections is not required to meet the requirements set forth in 42 CFR Part 84 and this letter. However, there must be a reasonable basis for selecting the sampling plans used.

8.2 Limitation to Required Testing. In some cases, applicants may wish to list testing and inspection in their quality control plans above that required by NIOSH for effective quality control of respirator performance.

Sampling done for these additional inspections is not required to meet the requirements in 42 CFR Part 84 and this letter. Additional testing should be identified clearly, such as with the notation "additional inspection," on documents submitted with the application to avoid delay and requests for clarification during processing. Any such testing listed in the approved quality control plan must be conducted as required by 42 CFR Section 84.42(c).

9. Common Errors

9.1 Selection of Inadequate Inspection Levels. The minimum acceptable inspection level is described in section 3.2 of this letter. If a product quality control plan does not specify inspection levels, NIOSH assumes that the level in the "normal" column of the table will be used. Use of lower levels without specific approval, whatever the reason, is a failure to conform to NIOSH requirements and can result in revocation of approval under 42 CFR Section 84.43(c).

9.2 Selection of Plan Based on Desired Sample Size. It is entirely improper to choose a desired sample size and work backwards to identify a proposed AQL and inspection level which will yield this result. To do so reflects a fundamental misunderstanding of the basis for sampling plans. The appropriate AQL and inspection level are stated in sections 2.2 and 3.2 of this letter.

9.3 Selection of Defect Classification Based on Desired AQL. As in 9.2, the defect classification drives the selection of AQL, not the other way around. Each defect must be classified based solely on the definitions in 42 CFR Section 84.41(d).

9.4 Modification of AQL or Inspection Level Based on Lot Size or Other Factors. The AQL and inspection level are chosen by the criteria in sections 2.2 and 3.2 of this letter. Approval holders are free to use higher inspection levels if greater discrimination is desired, or to use lower (more stringent) AQLs if a smaller percent defective is desired. However, these should not be modified based on lot size or inspection history, as provisions already exist to account for those factors. Changing AQL values or inspection levels is likely to result in a statistically invalid plan.

9.5 Inappropriate Use of Reduced Inspection. As described in section 4.1 of this letter, reduced inspection is permitted only when all conditions of the relevant procedure are met. When there are significant delays or changes in production processes, approval holders must revert to normal inspection. It will be considered a nonconformance during NIOSH on-site audits if the records described in section 4.2 of this letter are not available.

9.6 Incorrect Sample Size When Following Arrows in Sampling Tables. When using attribute sampling, be careful when following arrows in the sampling plan tables. A different sample size must be used to correspond with the new code letter as described in section 6.1 of this letter.

9.7 Improper Drawing of Samples. Each sample drawn must be representative of the entire lot as described in section 5.2 of this letter. The typical method is to select samples at random. However, other methods (such as every tenth piece) may be used so long as the sample is not biased in any way as a result. If a lot contains multiple sublots, the sample must contain a proportional number of pieces from each sublot.

10. References

American National Standards Institute [2003a]. Sampling procedures and tables for inspection by attributes. Milwaukee, WI: American Society for Quality, American National Standard ANSI/ASQ Z1.4-2003.

American National Standards Institute [2003b]. Sampling procedures and tables for inspection by variables for percent nonconforming. Milwaukee, WI: American Society for Quality, American National Standard ANSI/ASQ Z1.9-2003.

Squeglia NL [2008]. Zero acceptance number sampling plans. 5th ed. Milwaukee, WI: American Society for Quality.

U.S. Department of Defense [1957]. Sampling procedures and tables for inspection by variables for percent defective. Washington, DC: Office of the Assistant Secretary of Defense (Supply and Logistics), Military Standard MIL-STD-414 (including Notice 1, 8 May 1968).

U.S. Department of Defense [1963]. Sampling procedures and tables for inspection by attributes. Washington, DC: U.S. Government Printing Office, Military Standard MIL-STD-105D (including Change Notice 2, 20 March 1964).

U.S. Department of Defense [1989]. Sampling procedures and tables for inspection by attributes. Washington, DC: Department of Defense, Military Standard MIL-STD-105E.

For further information regarding sampling, contact Vance Kochenderfer via electronic mail at vck6@cdc.gov or by telephone at 412-386-4029. General inquiries may be directed to the Technology Evaluation Branch at npptl@cdc.gov or 412-386-4000.

Sincerely yours,

Heinz W. Ahlers
Chief, Technical Evaluation Branch
National Personal Protective Technology Laboratory

DEPARTMENT OF HEALTH & HUMAN SERVICE Public Health Service
Centers for Disease Control
and Prevention (CDC)
National Institute for Occupational
Safety and Health (NIOSH)
National Personal Protective
Technology Laboratory (NPPTL)
P.O. Box 18070
Pittsburgh, PA 15236
Phone: 412-386-4000
Fax: 412-386-4051
April 7, 2005

LETTER TO ALL RESPIRATOR MANUFACTURERS

Subject: Clarification of Supplier and Subcontractor Relationships

Background

National Institute for Occupational Safety and Health (NIOSH or the Institute) approval holders have established relationships with suppliers and subcontractors who are manufacturing ,components or subassemblies for approved respirator configurations. A growing number of approval holders wish to ship NIOSH-Approved respirators directly from a subcontractor to distribution centers or customers, and replacement parts directly to a repair center. The Institute has identified two possible approval holder relationships with suppliers and subcontractors.
Listed below are the responsibilities and requirements NIOSH has established for these relationships.

Definitions

Approval Holder: The party of record to whom certificates of approval have been issued. The approval holder maintains responsibility for, and control of, product design, performance, configuration management, manufacture, quality, and support.

Supplier:
A supplier produces components or subassemblies under their own quality system for delivery to the approval holder. The approval holder confirms the acceptability of incoming goods by accepting a Certificate of Compliance and inspecting incoming goods to ensure compliance with all product design, performance, and quality assurance criteria (drawings and engineering control). The approval holder releases the product for distribution and sale.

Subcontractor:
The approval holder may authorize a subcontractor to release NIOSH- approved respirators directly from their facility for distribution and sale, or to release components and subassemblies directly to an authorized repair center. The approval holder maintains responsibility for, and control of, product design, performance, configuration management, manufacture, quality, and support by maintaining influence over, and active involvement in, the subcontractor's quality system. As such, the subcontractor's facility is considered to be a manufacturing site for the approval holder.

Subcontractor Relationship Responsibilities

The approval documentation on file at NIOSH must demonstrate that the following criteria have been met for NIOSH recognition of a subcontractor.

- As with all other NIOSH approvals, the approval holder maintains responsibility for all aspects of the approval: control over product drawings, material specifications, parts lists, and manufacturing processes; control over the requirements for final inspection and testing; and approval of any changes to the above.

- The approval holder must assure that a subcontractor has demonstrated the ability to supply product that consistently meets the established release criteria, and has adequate quality systems and procedures in place to assure product quality on an ongoing basis.

- The approval holder must establish and maintain active involvement and influence over subcontractor quality systems. This can be demonstrated in many different ways. One example of this involvement and influence can be exhibited by participating in the subcontractor's management reviews (as defined by ISO 9001, 2000, section 5.6) required by the subcontractor's Quality System. A second example is participation in the subcontractor's Material Review Board.

- The approval holder's methods for maintaining active involvement and influence over their subcontractor's quality system needs to be documented in a plan or procedure that suits the individual situation and manufacturing complexity of the secured goods. This plan or procedure must be formally submitted to NIOSH.

- The approval holder will maintain copies of subcontractor quality records that demonstrate compliance with NIOSH performance requirements. It is important to assure that, in the event of a broken relationship, both the Approval Holder and NIOSH have continued access to those records.

- All submissions related to the approval must be made by an authorized representative of the approval holder. The subcontractor's Quality Manual and related quality system documents must represent how the approval holder establishes and maintains active involvement and influence over the subcontractor's quality system. This information must be specifically indicated and documented as part of a Quality Assurance Application. As with all Quality Manuals, a process must be established and followed for ongoing resubmission of the Quality Manual and related quality system documents in the event of significant changes, and on a periodic basis, per NIOSH requirements.

- All subcontractor relationships must be listed as an approval holder's manufacturing site, with a designated point of contact, on the NIOSH Standard Application Form (SAF) for direct shipment from the subcontractor to be acceptable under the NIOSH Approval.

- All manufacturing sites for NIOSH-Approved products, including subcontractor facilities, will be audited by NIOSH on a regular basis. The Institute will not contact the subcontractor directly, but will always work through the approval holder's designated representative for the specific manufacturing site.

Sincerely yours,

Heinz W. Ahlers
Acting Branch Chief
Respirator Branch
National Personal Protective Technology Laboratory

Definitions

The following definitions are provided for clarification of terms used in these procedures:

Accessory - An item provided with a respirator that does not affect the respirator's ability to meet the requirements of 42 CFR Part 84. The approval remains effective whether or not the accessory is used.

Alternate Contact - A contact designated by the prospective approval holder that can interface with NIOSH regarding applications and other NIOSH business such as audits and product investigations.

Amended Application - An application submitted at NIOSH's request that shows changes to correct an inaccuracy detected during the NIOSH application evaluation. The Applicant-Assigned Reference Number (AAR#) and Task Number (TN) will remain the same.

Applicant - The individual, partnership, company, corporation, association or organization that designs, manufactures, assembles, or controls the assembly of a respirator and who seeks to obtain a certificate of approval for such respirator.

Applicant-Assigned Reference Number (AAR#) - A unique identifying number of the applicant's choosing. The number must start with the three character manufacturer's code. The AAR# must never be reused.

Approval - A certificate or formal document issued by the Institute (in this instance NIOSH) stating that an individual respirator or combination of respirators has met the minimum requirements of this part (42 CFR 84), and that the applicant is authorized to use and attach an approval label to any respirator, respirator container, or instruction card for any respirator manufactured or assembled in conformance with the plans and specifications upon which the approval was based, as evidence of such approval.

Approval Holder - The entity to which a certificate or formal document has been issued by NIOSH stating that an individual respirator or combination of respirators has met the minimum requirements of 42 CFR Part 84. The approval holder is authorized to use and attach an approval label to any respirator, respirator container, or instruction card for any respirator manufacturers or respirator assembled in conformance with the plans and specifications upon which the approval was based.

Approval Labels - The label that is attached to the respirator, container, instructions, or packaging once approved by NIOSH. All major subassemblies in the approved respirator configuration must be on the approval label. Accessories may be listed on the approval label, but are not required.

Assembly Matrix - A diagram of all major subassemblies and accessories that apply to approvals in a respirator family. Components are identified by category, description, drawing number and revision, part number, and applicability to the listed approvals.

Authorized Representative - The person responsible for completing and submitting the Standard Application Form to NIOSH. This person can be an employee of the prospective approval holder or an independent consultant hired by the company to complete the Standard Application Form. Designated by prospective approval holder to interface with NIOSH regarding applications and other NIOSH business such as audits, and product investigations.

Belt Mounted - An air-purifying canister, chemical cartridge, or particulate filter or an air-supplied regulating valve or regulator that is mounted on the user's belt with an adaptor.

Canister - A gas or vapor removing component which meets the requirements of 42 CFR Part 84, subpart I, Tables 5, 6, and 7 only. Canisters may incorporate particulate filters and can be used for escape from immediately dangerous to life or health environments, which sufficient oxygen. Usually approved with under schedule 14G respirators.

Cartridge - A gas or vapor removing component which meets the requirements of 42 CFR Part 84, subpart L, Table 11. Cartridges may incorporate particulate filters. Cartridges cannot be used in immediately dangerous to life or health environments and are usually part of 84A or 23C approval schedules.

Chest and Back Mounted - Canisters fastened to a user's body, either on the back or chest, that have a breathing tube running from the canister to the facepiece inlet.

Chin Mounted - A canister, cartridge, or filter mounted on the full facepiece. Chin-style gas masks typically have a medium-sized (250-500 cm^3) canister rigidly attached to a full facepiece.

Combination Particulate Filtering and Gas/Vapor Removing - Cartridges and canisters that protect the user from both particulates and gases and vapors.

Common Assembly Matrix - An assembly matrix (diagram) that contains all of the information for a series of applications. A common assembly matrix should be found in the last application of the series. Also, a suggested processing order and an explanation as to how the applications interrelate must be in the Approval History, if applicable. In addition, assembly matrices should not contain information for future submissions. *(See "Series of Applications").*

Component - Essential parts to a respirator that provide function and effective performance of the product. *(See "Major Subassemblies").*

Controlled Document - Documents signed, released, and placed in an applicant's document control system.

Correlation Testing - Testing conducted to compare an applicant's test equipment and results to NIOSH's. The applicant must submit a new application with the wording "Correlation testing only; respirator is not submitted for approval" in the "Reason for Application" section.

Critical Characteristic - A feature that, if not manufactured properly, could have an adverse impact on the safety or health of the user. 100% testing or inspection is required prior to shipment to ensure conformance with all technical requirements of the approval.
As defined in 42 CFR Part 84: "Critical" A defect that judgement and experience indicate is likely to result in a condition immediately hazardous to life or health for individuals using or depending upon the respirator.

Critical User Instructions - Instructions that are important to operate a particular respirator. For instance, checking the service life indicator on a CCER is a critical user instruction.

Delist - Respirator listing is removed from the Certified Equipment List when NIOSH approval is rescinded or revoked.

Design - The overall specification for the respirator that includes materials, physical envelope and shape, manufacturing processes, and quality assurance requirements.

Discontinued - See obsolete.

Exploded-View Drawing - A drawing of the complete respirator assembly showing all major subassemblies and accessories and their proximity to one another.

Family of Products - A group or series of respirators sharing a common major subassembly, such as a facepiece or regulator. The applicant determines the basis for the respirator families.

Facepiece - A respirator component designed to provide a gas-tight or dust-tight fit with the face and may include headbands, valves, and connections for canisters, cartridges, filters, or respirable gas source.

Facepiece Mounted - A canister, cartridge, or filter mounted on the facepiece.

Features - Descriptors that relate to the makeup, shape, proportions, outward appearance, prominent characteristics, or qualities of the part, but are not separate components or devices. Do not list features on the approval label (e.g., "super-soft face seal").

Filter - A particulate removing component of a respirator which meets the requirements of 42 CFR Part 84, subparts K or KK.

Field-Replaceable - Any component, major subassembly, or accessory (e.g., cartridges, hoses, regulators) that can be replaced by the user following the manufacturer's User Instructions without any special knowledge, skills, abilities, or equipment.

Filtering Facepiece - An N, R, or P class particulate respirator where the entire facepiece is composed of the filtering media. The unit may have an exhalation valve, but has no replaceable parts.

Full Facepiece - A type of facepiece that covers a user from the hairline to below the chin.

Gas/Vapor Removing Respirator - A type of respirator that provides protection against specific gases and vapors.

Half-Mask - A type of facepiece that fits over the nose and under the chin and is used to protect users from toxic materials.

Hardware - Regular production units submitted for approval must be the result of actual manufacturing processes.

Hazardous Atmosphere - Any atmosphere that contains toxic or disease producing gas, vapor, dust, fume, mist, or pesticide, that is either immediately or not immediately dangerous to life or health. Also, any oxygen-deficient atmosphere.

Helmet - A rigid protective headgear incorporated into the design of a respirator that covers the user's head and possibly the user's neck.

Helmet Mounted - A canister, cartridge, or filter mounted on the helmet.

Hood - A light, flexible device covering only the head and neck, or head, neck, and shoulders of a user.

Hood Mounted - A canister, cartridge, or filter mounted on the hood.

Immediately Dangerous to Life or Health - Conditions that pose an immediate threat to life or health or conditions that pose an immediate threat of severe exposure to contaminants, such as radioactive materials, which are likely to have adverse cumulative or delayed effects on health.

Inactive - See obsolete.

Intrinsically Safe - Not capable of releasing enough electrical or thermal energy under normal or abnormal conditions to cause ignition of a flammable mixture such as methane or natural gas or air comprised of an easily ignitable composition.

Major Subassemblies - Those components or subassemblies (1) that are essential to the respirator's function and effective performance; (2) that affect the respirator's performance or design; and (3) which are field-replaceable items.

Manufacturer's Code - A unique three-letter code assigned to each approval holder by NIOSH.

Model Number - An identifier of a product given by the manufacturer. A model number is not required to identify each unique configuration.

Mouthpiece - A respirator component that is held in the teeth with a clamp to close the nostrils that provides a gas-tight or dust-tight fit with the mouth.

New Design - An entirely new or substantially modified respirator, component, or arrangement of components (some of which may have been used on previously approved respirators) which NIOSH has not evaluated in this configuration.

Not Immediately Dangerous to Life or Health - Any hazardous atmosphere which may produce physical discomfort immediately, chronic poisoning after repeated exposure, or acute adverse physiological symptoms after prolonged exposure.

Nuisance Level Contaminants - Contaminants where the concentration in the atmosphere is below the established PEL (OSHA permissible exposure limit) or REL (NIOSH recommended exposure limit), whichever is lower. Nuisance level protection capability is not evaluated by NIOSH.

Obsolete - A respirator is considered obsolete when it is no longer manufactured or supported by the approval holder. However the NIOSH approval is still listed and the respirators can still be used until the units can no longer be maintained in an approved configuration. Approval remains active and is shown in the CEL as obsolete.

Part Number - The unique number referenced by users to identify respirator parts. The identifying number located on the component must match the part number shown on all labels (abbreviated and full) and on the assembly matrix. The location of the part number on the component hardware must be shown on the drawings. Applicants sometimes refer to the part number as catalog number, manufacturer number, production component number, among other terms.

Particulate Filtering Respirator - A type of respirator that protects users against solid particles or liquids such as dusts, fumes, and mists by trapping the particles with its fibers. The filters are classified by NIOSH as N, R, or P accompanied by either 95 (95%), 99 (99%), or 100 (99.97%) to indicate filtration levels.

Permissible Exposure Limit (PEL) - An OSHA permissible exposure concentration limit based on health data evaluation. Users working in contaminate levels below this concentration are not required by OSHA to have respiratory protection.

Pre-filter - An accessory item situated in front of the approved filter that removes coarse particles but does not meet 42 CFR Part 84 criteria for particulate filters. A pre-filter is a filter often used prior to an N-, R-, or P-series filter or cartridge. Pre-filters are not classified as N-, -R, or P-series filters. When pre-filters are used, the complete assembly must meet the resistance requirements of 42 CFR Part 84. Pre-filters may be listed on the approval labels. If shown on the approval label, pre-filters must be listed as an accessory and designated as a pre-filter.

Pre-Submission Test Data - Respiratory performance test data must accompany each application and must specify components used for test configuration by part number, show units of measure for all test data (matching 42 CFR Part 84 criteria), and submit copies of actual test data with all results and conclusions.

Performance - The actual operational performance of the respirator with respect to the applicable regulations and design parameters. The respirator must meet or exceed the requirements of the

NIOSH regulations under 42 CFR Part 84 when evaluated against NIOSH standard test procedures (STPs) as appropriate to the type of respirator.

Primary Contact - The person designated by the prospective approval holder to receive all official NIOSH correspondence, including but not limited to approval and denial letters, manufacturers meeting notices, and notices seeking input for standards development. If this person changes, it is the responsibility of the manufacturer to notify NIOSH, in writing, of the person taking over this responsibility. The preference is for the Primary or Alternate Contact to make the notification to NIOSH prior to the change. Alternatively, a corporate officer may notify NIOSH.

Private Label - A respirator labeled as belonging to an organization that is not the approval holder. Private-labeled respirators are assigned the same TC number issued to the approval holder for the original product. Only the approval holder can apply for a private label.

Private Packaging - A respirator that is repackaged and sold by a company that is not the approval holder. All part numbers, model numbers, and approval labels must be the same as those approved by NIOSH. However, the packaging may reference the packaging company instead of the approval holder. The approval holder is responsible for ensuring that private packaging arrangements do not mislead the end user.

Product Quality Control Plan (PQP) - Summarizes the manufacturing, inspection, test operations, and applicable documents used in regular production of a specific respirator family.

Product Trade Name - A name that uniquely identifies a respirator or respirator family. A product trade name is required because of the way approval holders market and users reference certified respirators. The product trade name must not imply use for a specific hazard.

Protection - A *different type of protection* is defined as protection against a different atmospheric contaminant (e.g., particulates, chlorine gas, ammonia gas, mercury vapor, etc.). A *different level of protection* is defined by a change in the type of facepiece (half-mask, full facepiece) or mouthpiece, filtering efficiency (such as N95 as opposed to N100), and/or the air supply capability (e.g., pressure, duration, demand flow, continuous flow, etc.).

Prototype - Defined as a respirator or component that (a) involves a new design produced using rapid prototyping methods, temporary tooling, non-production tooling, or regular production tooling in a new fashion, and (b) has demonstrated by the applicant's pre-testing to meet 42 CFR Part 84 minimum design and performance requirements. Respirators may not be submitted for approval while in this defined prototype stage (limited production tooling and processes). NIOSH will request samples made on regular production tooling and production quality control (Ref. 84.30 (c)) if the approval holder request approval. For non-approval prototype testing use a new application form and state "Prototype Testing Only - Respirator is Not Submitted for Approval" in the "Reason for Application."

Quality Assurance (QA) - A planned and systemic pattern of all activities necessary to provide confidence that all respirators will perform satisfactorily in operation.

Quality Assurance (QA) Manual - Documents the approval holder's quality systems including the organizational structure, responsibilities, procedures, processes, and resources for implementing quality management and policy. Hard copies with original approval signatures need submitted and will be retained in NIOSH's files.

Quarter-Mask - A type of facepiece that covers the mouth and nose where the lower sealing surface rests between the mouth and chin. Quarter-masks are most commonly found on dust and mist respirators.

Recommended Exposure Limit (REL) - A NIOSH recommended exposure concentration limit based on health data evaluation. Users working in contaminate levels below this concentration are not required by OSHA to have respiratory protection.

Regular Production Unit - A respirator or component made on regular production tooling, or that is identical to units made using regular production tooling, and is not made with any operations that will not be included in regular production.

Rescission - The approval holder voluntarily requests the certificate of approval be withdrawn for a product. The approval is no longer valid. Respirators in the field are no longer NIOSH-Approved. Respirators are not listed in the CEL.

Respirator - Any device designed to provide the wearer with respiratory protection against inhalation of a hazardous atmosphere.

Resubmission of an Application - Resubmission of a previously denied application. Resubmitted applications receive a new task number (TN) and are placed at the end of the application processing queue. All documentation must be updated to the current dates and revision levels.

Revocation - NIOSH reserves the right to revoke, for cause, any certificate of approval issued pursuant to the provisions of 42 CFR Part 84. Such causes include, but are not limited to, misuse of approval labels and markings, misleading advertising, and failure to maintain or cause to be maintained the quality control requirements of the certificate of approval. The approval is no longer valid. Respirators in the field are no longer NIOSH-Approved. Respirators are not listed in the CEL.

SEI Retrofit - An update or correction to a suspected performance or design issue to a self-contained breathing apparatus (SCBA) that is approved by NIOSH and the Safety Equipment Institute. This type of SCBA is approved jointly by NIOSH and SEI for use in firefighting operations.

Series of Applications - A series of associated applications submitted at the same time (in the same bundle or package). A common assembly matrix that contains all of the information for the submitted series is located in the last application of the series. Assembly matrices must not contain information regarding future submissions.

Service Life Plan - A document that contains information on the reliability engineering methodology and appropriate service life dates that users may rely on for determining safe and reliable performance of the respirator under intended use conditions.

Simplified Drawings - Exploded-view and major subassembly drawings that accompany the application. Any additional drawings necessary for clarification of a major subassembly or part may also be included.

Standard Application Form (SAF) - The electronic form used to submit respirator approval requests to NIOSH.

Subcontractor - The entity contracted to produce products under the direction/oversite of the prospective approval holder.

Supplier - The entity that produces components or subassemblies under their own quality system for delivery to the approval holder.

User Instructions - Detailed instructions provided to the user that describes how to properly inspect, don, and use the product.

ACRONYMS

AAR# - Applicant Assigned Reference Number

ABMS - Automated Breathing Metabolic Simulator

AP - Air-Purifying

APRS - Air-Purifying Respirator Section

AQL - Acceptable Quality Level

AS - Air-Supplied

ASR - Air-Supplied Respirator **(See SAR)**

BMS - Breathing Metabolic Simulator

CAR - Corrective Action Request

CBRN - Chemical, Biological, Radiological, and Nuclear

CCER - Closed-Circuit Escape Respirator

CEL - Certified Equipment List

CFR - Code of Federal Regulations

CGA - Compressed Gas Association

CV&SDB - Conformity Verification and Standards Development Branch

EBSS - Emergency Breathing Support System

EIN - Employer Identification Number

ESLI - End-of-Service-Life Indicator

EOSTI - End-of-Service-Time Indicator

ETB - Evaluation and Testing Branch

HHS - Department of Health and Human Services

HSBG - Human Subject Breathing Gas

IDLH - Immediately Dangerous to Life or Health

LRPL - Laboratory Respirator Protection Level

MSHA - Mine Safety and Health Administration (Department of Labor)

NFPA - National Fire Protection Association

NIOSH - National Institute for Occupational Safety and Health

NPPTL - National Personal Protective Technology Laboratory

OSHA - Occupational Safety and Health Administration (Department of Labor)

PAPR - Powered Air-Purifying Respirator

PEL - Permissible Exposure Limit (OSHA)

PQP - Product Quality Control Plan

QA - Quality Assurance

REL - Recommended Exposure Limit (NIOSH)

RPD - Respiratory Protective Devices

RPU - Regular Production Unit

SAF - Standard Application Form

SAP - Standard Application Procedure

SAR - Supplied-Air Respirator

SCBA - Self-Contained Breathing Apparatus

SCP - Standard Conditioning Procedure

SCSR - Self-Contained Self-Rescuer

SEI - Safety Equipment Institute

SOP - Standard Operating Procedure

STP - Standard Test Procedure

TC Number - Testing and Certification Number; the NIOSH approval number designation

TN - Task Number; a unique number assigned by NIOSH to each application

Revision History

Date	Section	Action
12/14/2017		
12/14/2017	**Section 1** 1.19 Submitting Test Samples	**Added a last sentence to the first paragraph in this section:** *All sample components must be identified and labeled with their corresponding* part numbers as listed on the assembly matrix.
12/14/2017	**Section 1** 1.2.2 Extension of Approval Application	**Added second paragraph below the second drawing:** *Any changes to NIOSH-approved records (documents) must be submitted to NIOSH. This includes any minor changes to any document that is part of the approval record. These changes should be submitted for an extenion of approval at your earliest convenience. NOTE: Documents that are not up-to-date in the NIOSH records could be identified during a site audit and result in a non-conformance.*
12/14/2017	**Section 1** 1.2.3. Quality Assurance Approval Application	First bullet. **Changed from:** Used for new or updated Quality Assurance (QA) Manuals only. **To:** *Current NIOSH approval holders may used this type of application to submit new or updated Quality Assurance (QA) Manuals. This type of application is limited to current approval holders*.
12/14/2017	**Section 2** 9 (Section C.9) Reason for Application	Third paragraph. **Added:** *Also, list the Corrective Action Request (CAR) number associated with the application.*
12/14/2017	**Section 2** 12 (Section C.12) Intended Protection and Safety Design.	**Added** at the end of the last paragraph: ***NOTE:*** *If this respirator is to be used in underground mines and has electronics, MSHA intrinsic safety approval must be received prior to submitting to NIOSH.*
12/14/2017	**Section 2** 15 (Section C.15) Test Samples	Third paragraph. Second sentence. **Added:** *as it is listed on the assembly matrix,* **Sentence now reads:** The hardware samples to be used for testing and any additional hardware samples requested by NIOSH must clearly show the part number on each item, *as it is listed on the assembly matrix,* regardless of how it is packaged.
12/14/2017	**Section 3** 3.1 Quality Assurance Documentation	Second paragraph. Third sentence. **Changed to read:** *In a separate application, submit only the sections that have been revised and an updated revision history sheet.*

12/14/2017	**Section 3** 3.5 Supplied-Air Testing Fees	**Deleted:** Do not issue a single payment (check or pay.gov) for multiple invoices. Separate payments (check or pay.gov) are required for each application invoice received. Include the AAR# on the payment so it is properly credited.***Added:*** *A single payment (check or pay.gov) for multiple invoices is allowed. Include the AAR#s for each associated application on the check or the pay.gov receipt so they will be properly credited. Separate payments (check or pay.gov) will also be allowed for each application invoice. For application fee invoices, included the TN number(s) associated with the payment. To indicate a final payment for a specific application(s), add an -F after the TN number(s) (TN-nnnn-F).*
12/14/2017	**Section 3** 3.6 Annual Certification Fees	**Deleted last sentence in section:** Only one application per check.
12/14/2017	**Section 3** 3.8 Drawings for SAR …	**Deleted sentence:** However, it is suggested that applicants also use their three character manufacturer's code in drawing filenames (XXXnnnnRa.dwg).
12/14/2017	**Section 3** 3.12 List of NIOSH Cautions …	**Special Cautions and Limitations Notes. For K. Added:** *for formaldehyde.*
12/14/2017	**Section 3** 3.12 List of NIOSH Cautions …	**Added additional paragraph at end:** *If the respirator contains electrical components and the applicant wishes to list the respirator on the NIOSH approval label as intrinsically safe, first obtain intrinsic safety approval from the MSHA under Title 30 CFR Part 18 or other recognized independent laboratory and submit verification of such approval in the application. If the respirator is for underground use, MSHA intrinsic safety approval must be received first prior to submitting to NIOSH.*
12/14/2017	**Section 3** 3.13 Private Labeling	Third paragraph. **Added:** *A specific section titled* "S-Special …"
12/14/2017	**Section 3** 3.14 User Instructions	**First paragraph. Second sentence. Changed to read:** User Instructions *must* be listed and *are required* to be listed on the assembly matrix for Supplied-Air Respirators. .
12/14/2017	**Section 3** 3.14 User Instructions	Fifth paragraph. Starting with For all tight-fitting respirators that must be … **Added:** *under a Special "S" titled listing.*

3/8/2018	**Section 3** 3.16 Summary of Related Documents	**Added to the end:** *In addition to the application file, the manufacturer must submit related project documents. These documents must be in English and saved with the following file-naming conventions. Any files created in a language other than English will be returned unprocessed.*
12/14/2017	**Section 3** 3.17 File Naming Convention	**Added an additional bullet to end of bulleted list:** *NIOSH will only accept single documents under a single filename. Multiple documents under a single filename will not be accepted and the application may be denied.*
12/14/2017	**Section 4** 4.4 Denial of a Project Undergoing NIOSH Evaluation	**Eighth bullet. Added to item (1). Now reads:** The official submittal either (1) requested approval of two respirators of different basic designs (includes submitting *a supplied-air respirator with a regulator along with an alternate that is a regulator with a hot/cold tube in the same application)* or (2) requested a new approval and an extension of approval in the same application.
12/14/2017	**Section 4** 4.4 Denial of a Project Undergoing NIOSH Evaluation	**Eleventh bullet: Added:** *(along with MSHA intrinsic safety)*
12/14/2017	**Section 6** 6.1 NIOSH Respirator Application Checklist	**Added to item 9**: as listed on the assembly matrix.
12/14/2017	**Section 6** 6.1 NIOSH Respirator Application Checklist	**Item 25 changed to read:** *All required information is present on the Supplied-Air Respirator drawings, as indicated on the appropriate checklists.*
12/14/2017	**Section 6** 6.1 NIOSH Respirator Application Checklist	**Item 29. Added:** *applicable*

12/14/2017	**Section 6** 6.4 Self-Contained Breathing Apparatus	**Deleted from item 1**: B, BE, C, and CE. **Added to item 1**: *A, AE, B, and BE.*
12/14/2017	**Section 6** 6.5 Supplied-Air Respirator	Under Respiratory Inlet Covering (Facepiece) **Deleted:** or Hood.
12/14/2017	**Section 6** 6.7 Private Label Checklist for …	**Item 4. Added:** *applicable*
12/14/2017	**Section 6** 6.8 Document Examples	Item 7. **Deleted:** Nuisance OV **Added:** *hot/cold tube*
3/12/2018	**Section 7** **7.5** Example Assembly Matrix	Replaced table to *add row for drawing number*.
12/14/2017	**Appendix** Acronyms	Added: CAR - Corrective Action Request