CONTROL TECHNOLOGY ASSESSMENT
THE SECONDARY NONFERROUS
SMELTING INDUSTRY

D.J. Burton
R.T. Coleman
W.M. Coltharp
J.R. Hoover
R. Vandervort

Radian Corporation
Austin, Texas 78766

NIOSH Contract No. 200-77-0008
Radian Contract No. 200-163

U.S. DEPARTMENT OF HEALTH AND HUMAN SERVICES
Public Health Service
Center for Disease Control
National Institute for Occupational Safety and Health
Division of Physical Science and Engineering
Cincinnati, Ohio 45226

October 1980

DISCLAIMER

The contents of this report are reproduced herein as received from the contractor.

The opinions, findings, and conclusions expressed herein are not necessarily those of the National Institute for Occupational Safety and Health, nor does mention of company names or products constitute endorsement by the National Institute for Occupational Safety and Health.

NIOSH Project Officer: James A. Gideon
Principal Investigators: R.T. Coleman
R. Vandervort

DHHS (NIOSH) Publication No. 80-143

ABSTRACT

This study identifies, evaluates, and characterizes the best available exposure controls presently being used in the secondary nonferrous smelting industry. The major result of this study is the documentation that successful control of employee exposure almost always depends on an integrated control program--a program that requires the application of several different control elements, none of which will work effectively without the others. Engineering controls, work practices, and personal protective equipment are the major controls identified for protecting employees from specific hazards. Recommendations are made for further research and development programs that will result in improved control technology. In addition, the potential for control technology transfer is addressed and specific examples are given.

CONTENTS

Abstract iii
Figures vii
Tables xi
Conversion Chart xiii
Acknowledgments xv

1. Introduction 1
   Objectives 1
   Contents of the Final Report 3

2. Discussion of Results 5
   Major Elements of Observed Control Technology ... 5
   Opportunities 9
   Identification of Areas Needing Improvement 11

3. Recommendations 16
   Industry Assessment 16
   Toxic Chemical/Harmful Physical Agent Assessments 17
   Control Technology Improvement 17

4. Preliminary Surveys 19
   Smelter 0030 26
   Smelter 0960 30
   Smelter 1085 35
   Smelter 1180 40
   Smelter 1205 47
   Smelter 1300 53
   Smelter 1800 64
   Smelter 1825 70
   Smelters 2140 and 2090 75
   Smelter 2091 89
   Smelter 2275 95
   Smelter 2295 99
   Smelter 2520 109
   Smelter 2640 113
   Smelter 2780 118
   Smelter 2830 122
   Smelter 2895 132
   Smelter 2920 145
   Smelter 3027 150
   Smelter 3290 158
   Smelter 5000 162

5. In-Depth Surveys 172
In-Depth Survey I: Smelter 2295 174
In-Depth Survey II: Smelter 1800 222
In-Depth Survey III: Smelter 1205 232
In-Depth Survey IV: Paul Bergsoe and Son A/S 258
In-Depth Survey V: Smelter 2920 330
In-Depth Survey VI: Smelter 1300 341

Appendix: "Plant Respirator Program" and "Health Maintenance of Workers Exposed to Inorganic Lead" for Smelters 2140 and 2090 351

FIGURES

Number		
1	Smelter 1180, aluminum sweating furnace	44
2	Smelter 1180, aluminum reverberatory furnace	45
3	Ventilation system, Smelter 1300	55
4	General layout of Smelter 1825	71
5	Ventilation system for Smelter 2140	80
6	Ventilation system for Smelter 2090	81
7	Enclosure of secondary lead blast furnace	83
8	Layout of Smelter 2275	96
9	General layout of Smelter 2520	110
10	Layout of aluminum plant	127
11	Layout for miscellaneous metal smelting/melting	129
12	Layout for dross plant	130
13	General layout of Smelter 2920	146
14	General plant layout	151
15	Layout of sweating furnace	155
16	General layout of gas collection system	157
17	Location of scrap briquetter in corner of raw materials warehouse	175
18	Furnace building, Smelter 2295	176
19	Multiple views: briquetting machine control system	178
20	Relationship of control system to other structures and employee work areas	179
21	Briquetting machine hood face velocity measurements	181
22	Reverberatory furnace and controls	183
23	Reverberatory furnace employee work areas and flue gas draft control	185
24	Multiple views: tapping/pouring hood	189
25	Relationship of tapping/pouring hood to other structures and employee work areas	191
26	Ingot mold carrousel and pouring crew work stations	192
27	Tapping/pouring hood face velocity measurements	194
28	Modification to exhaust hoods to improve emission control	202
29	Rotary furnace	204
30	Process layout	206
31	Hot flue gas exhaust system	209
32	Local exhaust systems for fugitive emissions	211
33	Front view of rotary furnace and control structures	212
34	Tapping and pouring hood detail	213
35	Charging hood detail	214
36	Supplied air system	216
37	Ingot quenching exhaust system	217

38 Axial fan: fugitive emissions exhaust system 218
39 Hammermill noise enclosure 224
40 Acoustic tunnel for hammermill feed conveyor 229
41 Approximate location of rotary furnace in production building 233
42 Rotary furnace - process layout 234
43 Rotary furnace - charging side elevation 235
44 Rotary furnace - charging platform 238
45 Bull ladle hood, tap hole hood, and booster fan 240
46 Pouring, skimming, and charging work areas 241
47 Rotary furnace - water-cooled charging door 243
48 Rotary furnace - flue gas measurements 244
49 Rotary furnace - charging hopper 246
50 Bull ladle hood (movable, supported from monorail) . 251
51 Bull ladle hood - air flow measurements 253
52 General process flowsheet for the secondary lead smelting industry 259
53 Whole battery smelter furnace and flue gas treatment system 261
54 Flash agglomeration furnace 266
55 Plot plan 267
56 Front-end loader delivering charge to top of SB furnace 268
57 View of smelter building and baghouse 268
58 Slag tapping area 270
59 View of agglomeration furnace 270
60 Overview of SB furnace building and charge storage and preparation building 274
61 Furnace charging hood (Hood I) 276
62 Key to local exhaust ventilation hoods associated with SB furnace and agglomeration furnaces 277
63 SB furnace ground level work area, SB furnace building 278
64 Overview of exhaust ventilation controls for the tapping of slag and finished metal 279
65 Agglomeration furnace and ladle hood (Hoods J and K) 282
66 Details of slag tap hole plug and tuyere design 286
67 Key to ventilation system test points 292
68 Face velocity measurements - furnace charging hood (Hood I) 295
69 Side elevation - slag tapping hods (Hoods A,B,C,D) 297
70 Front elevation - slag tapping ladle (Hoods A,B,C,D) 298
71 Secondary slag tapping hoods (Hoods E and F) 300
72 Front elevation of finsihed metal tapping hood (Hood G) 301
73 Finished metal ladle cooling hood (Hood H) 303
74 Rotary furnace smelting and charge storage preparation building 310
75 Close-up of charge container resting deck, roll-up door, and etail of charge container 311
76 Rotary furnace charging and tapping controls 312

77 Overview of rotary furnace ventilation controls and key to ventilation system test points 319
78 Finished metal ladle cooling hood 324
79 Pot induction furnace hood 328
80 Layout of Smelter 2920 sampling locations and work areas 331
81 Kettle hoods 333
82 Schematic outline of process equipment 341
83 Battery shear 342
84 Hygiene facility 350

A-1 Normal pathways for the formation of hemoglobin 363

TABLES

Number

1 Summary of Selection Criteria for the Secondary Nonferrous Smelting Industry 2
2 Preliminary Site Visit Process/Engineering Control Summary 20-25
3 Percentage of Smelter Employees with Average Exposures to Airborne Lead 56
4 Percentage of Smelter Employees with Specific Ranges of Blood Lead Levels 56
5 Typical Blast Furnace Charge 136
6 Summary of In-Depth Surveys 173
7 Personnel Sampling Data for Operator of Briquetting Press #3 182
8 Air Sampling Data Associated with Operation of the Tapping/Pouring Hood 196
9 Air Sampling Data Associated with Reverberatory Furnace Charging Hoods 198
10 Existing Controls and the Emission Source They Were Designed to Control 200
11 Sample Results 208
12 Sound Level Measurements 226
13 Air Sampling Data 249
14 Noise Measurements 257
15 Typical Feed Makeup for SB Smelting Furnace Charge . 263
16 Approximate Elemental Distribution in Smelter Exit Streams 271
17 Stack Emission Determined Using WEP Train 272
18 Breathing Zone, Lead-In-Air Concentrations Associated with SB Furnace Operations 289
19 Work Area Lead-In-Air Concentrations Associated with Operation of the SB Furnace 290
20 Summary of Hood Entry Coefficients in SB Furnace and Agglomeration Furnaces Ventilation Systems 294
21 Work Area Arsenic-In-Air Concentrations Associated with Operation of SB Furnace 294
22 Results of Noise Measurements Made in Association with SB Furnace Operations 306
23 Lead and Antimony-In-Air Concentrations Associated with Rotary Furnace Operations 318
24 Results of Tests in Rotary Furnace Ventilation System 320

25 Results of Noise Measurements Made in Association with Rotary Furnace Operations 326
26 Air Sampling Data 335
27 Sound Measurements 340
28 Exposure Levels 348

Conversion Chart

To Convert From	To	Multiply By	
British thermal unit (Btu, International Table)	joule (j)	1.0550559	E + 03
Btu/hour	watt (w)	2.9307107	E - 01
Btu/second	watt (w)	1.0550559	E + 03
Btu/ft^2-hr-deg F (heat transfer coefficient)	joule/meter^2-second-kelvin(J/m^2·s·K)	5.6782633	E + 00
Btu/ft^2-hour (heat flux)	joule/meter^2-second (J/m^2·s)	3.1545907	E + 00
Btu/ft-hr-deg F (thermal conductivity)	joule/meter-second-kelvin(J/m·s·K)	1.7307347	E + 00
degree Fahrenheit (°F)	kelvin (K)	$t_K = (t_K + 459.67)/1.8$	
degree Rankine (°R)	kelvin (K)	$t_K = t_R/1.8$	
foot	meter (m)	3.0480000*	E - 01
foot^2	meter^2 (m^2)	9.2903040*	E - 02
foot/second^2	meter/second^2 (m/s^2)	3.0480000*	E - 01
foot^2/hour	meter^2/second (m^2/s)	2.5806400*	E - 05
foot^2/second	meter^2/second (m^2/s)	9.2903040*	E - 02
foot^3	meter^3 (m^3)	2.8326847	E - 02
gallon (U.S. liquid)	meter^3 (m^3)	3.7854118	E - 03
horsepower (550 ft·lbf/s)	watt (W)	7.4569987	E + 02

(Continued)

Conversion Chart

To Convert From	To	Multiply By	
inch	meter (m)	2.5400000*	E - 02
inch of mercury (60°F)	pascal (Pa)	3.37685	E + 03
inch of water (60°F)	pascal (Pa)	2.48843	E + 02
$inch^2$	$meter^2$ (m^2)	6.4516000*	E - 04
$inch^3$	$meter^3$ (m^3)	1.6387064*	E - 05
kilocalorie	joule (J)	4.1868000*	E + 03
kilogram-force (kgf)	newton (N)	9.8066500*	E + 00
psi	pascal (Pa)	6.8947573	E + 03
ton (short, 2000 lbm)	kilogram (kg)	9.0718474*	E + 02
watt-hour	joule (J)	3.6000000*	E + 03

ACKNOWLEDGMENTS

The assistance of the smelters that participated in this study and the OSHA area and regional offices that helped in the data gathering effort is gratefully acknowledged.

SECTION 1

INTRODUCTION

OBJECTIVES

This study was done to document and evaluate the most effective available control technology that will be needed to minimize worker exposure to toxic chemical and harmful physical agents used or generated by the processes and operations used in the secondary nonferrous smelting industry. Existing information gathered from OSHA, NIOSH, state agencies, and other sources was reviewed and assessed and a series of preliminary and in-depth plant surveys were made. Although the program originally covered both the primary and secondary segments of the nonferrous smelting industry, this report discusses only the secondary industry. The primary industry was covered in a separate report (Control Technology Summary Report on the Primary Nonferrous Smelting Industry).

Gathering and Assessing Existing Information

The following public sources of information concerning controls to protect workers in the secondary nonferrous smelting industry were examined under this task:

- OSHA national, regional, and area offices
- NIOSH
- State regulatory agencies
- Representatives of industry
- Industrial organizations and associations
- Previous work accomplished by Radian Corporation

Activities under this task involved written correspondence and telephone communication, requests for information under the Freedom of Information Act, interviews with experts and representatives in the industry, and a search and review of the open literature.

Prioritization of the Industry

To place major emphasis of the study in those areas where the

greatest number of workers are exposed to the most severe hazards, the following criteria used were in selecting the smelters for preliminary surveys:

- o number of production workers in segments,
- o the nature of the chemical and physical hazards,
- o commonalities of the processes,
- o geographic location, and
- o industry growth trends.

These criteria are listed in their approximate order of importance; the first two have about equal weight but are considerably more important than the latter three. Since it was fundamental to the program that both preliminary surveys and in-depth studies be conducted on a purely voluntary basis, an additional important criterion was the willingness of plant management to participate in this program.

In the summary of the selection criteria (Table 1), each criterion is ranked according to importance in the segment. The lower the number, the more important the criterion. The results of this priority listing indicate that both the copper, brass, and bronze and the lead/antimony segments are of primary importance with the aluminum segment being of secondary importance.

Table 1. Summary of the Selection Criteria for the Secondary Nonferrous Smelting Industry

Criterion	Ranking	Segment		
		Al	Cu,B,B	Pb/Sb
1. Number of production workers	3	3	3	3
2. Chemical and physical hazards	3	1	2	3
3. Process commonalities	1	2	1	2
4. Industry trends	1	2	3	1
Total ranking points		16	19	21

Selection of Smelters for Preliminary Surveys

With the use of the prioritizing process, smelters for preliminary surveys were selected. Requests, in writing and by telephone, were made to most of the smelters identified as "still in operation."

Preliminary Surveys

Based on the response from those smelters contacted, 22 secondary nonferrous smelters participated in the preliminary surveys (in addition, 6 preliminary surveys were conducted at primary smelters). These included:

Copper, Brass, and Bronze	(1)
Lead/Antimony	(11)
Aluminum	(4)
Other (Zinc, e.g.)	(2)

Selection of Smelters for In-Depth Surveys

A list of those processes and controls necessary to characterize the industry was obtained from the preliminary surveys. The preliminary surveys indicated that 12 to 15 processes should be studied in-depth to adequately characterize the secondary nonferrous metals industry. Smelters were selected on the basis of: their willingness to participate and their use of processes selected for in-depth study.

Summarized Results

Interim results were reported during the course of the program in a form suitable for direct incorporation into the final report (Sections 4 and 5, respectively). At the completion of the in-depth surveys the Executive Summary results (Sections 2 and 3) were compiled.

Summary of Studies

Based on the project rationale, approximately 450 secondary nonferrous smelters were identified in the United States through the data gathering activities. Of these, 22 smelters were selected for preliminary surveys. From these surveys 12 processes were selected for in-depth surveys. To measure the 12 processes, permission was obtained from 6 separate secondary smelters. The six independent in-depth study reports contain the results of area and personnel sampling, observations, engineering measurements, and interviews with operating personnel.

CONTENTS OF THE FINAL REPORT

The remainder of this report contains a summary of the major results, along with the reports containing the results of the preliminary and in-depth surveys. Section 2 contains the discussion of results including:

- o major elements of observed control technology,
- o opportunities for control technology transfer, and

- identification of areas needing improvement.

Section 3 contains the recommendations made based on the results of the assessment study.

Sections 4 and 5 contain the results of the preliminary and in-depth studies, respectively. Included in each preliminary survey are:

- a description of the processes employed by the smelter,
- a description of the engineering controls employed,
- a description of the personal protective equipment, and
- work practices employed by the smelter.

The in-depth surveys include chemical analysis of samples taken by area and personnel monitors, chemical analysis of materials encountered in the process, as well as the results of detailed observation of process and control operations. When available, sketches and nameplate data are included for engineering controls.

A document entitled, "Process Catalogue and Occupational Safety and Health Review of the Secondary Nonferrous Smelting Industry," was also prepared under this contract. The processes employed by each segment of this industry (i.e., the various metals processed) are described with an accompanying discussion of the health and safety aspects of each process. The reader, if not familiar with the processes and controls discussed in this volume is referred to the Catalogue for additional basic information available from NTIS.

SECTION 2

DISCUSSION OF RESULTS

One of the goals of this study was to identify, evaluate, and characterize the best available exposure controls presently being used in the secondary nonferrous smelting industry. Based upon discussions with industry representatives, preliminary visits to 22 plants, 6 in-depth surveys, literature reviews, and Radian's past experience in the industry, it is believed that the exposure controls presented herein represent the state-of-the-art.

This study documents that successful control of employee exposure almost always depends on an integrated control program--a program that requires the application of several different control elements, none of which will work effectively without the others. An example of this phenomenon is the rotary furnace control program described in the report of Smelter #2295 (Section 3). Six separate control elements were employed to protect workers from over-exposure to zinc oxide and lead fume. No single element of control would have been effective.

In most of the smelters surveyed, only a portion of a completely integrated control program was in use. Thus, effectiveness of controls used in one area of the smelter was masked by contamination from other uncontrolled or poorly controlled sources.

MAJOR ELEMENTS OF OBSERVED CONTROL TECHNOLOGY

All of the exposure control elements described in Sections 4 and 5 of this volume, are examples of applications of the basic industrial hygiene exposure control principles outline below:

<u>Engineering Controls</u>

- o Isolation of process or employee.
- o Enclosure of process or employee.
- o Ventilation
  - Local exhaust (emission control at emission source)
  - Dilution of contaminant with fresh or less contaminated air

- Substitution of existing materials, process, or equipment with less hazardous materials, process, or equipment

- Modification of the physical state of the source or contaminant, e.g., wetting dry materials or increasing mass or stiffness of vibrating surfaces to modify the conversion of vibration energy to noise energy

- Denying emission energy to the source, e.g., not heating metals to unnecessarily high temperatures or allowing hot materials to cool

Administrative Controls

- Operation practices

- Employee work practices

- Work schedules to minimize exposures during emission-producing operations

- Employee rotation to lower exposure areas

- Employee training

- Housekeeping practices, policies, and procedures (housekeeping equipment such as a central vacuum cleaner would be classed an engineering control)

- Maintenance practices and policies

Personnel Protective Equipment Control

- Respiratory protection

- Skin protection

Although approximately 11 basic operations are found in secondary nonferrous smelters, smelters vary greatly in the specific equipment and smelting techniques used in each of the basic operations. The following paragraphs summarize each of the basic operations and describe relatively effective control principles seen during the study. More detailed discussions of these operations are given in Volume II, the Process and Occupational Safety and Health Review, and in Sections 2 and 3. In most cases, successful control of exposure assumes that housekeeping, maintenance, and employee training are effectively implemented. Additionally, the almost universal use of respiratory protection in secondary lead smelters is currently a common employee exposure protection technique.

Raw Materials Handling/Storage

Every smelter receives, handles, and stores raw materials. These materials may include: metal oxides, scrap, flue dusts, slags, fuels, and refining materials such as lime, iron, etc. Raw materials are handled manually and mechanically with front end loaders, conveyor systems, trucks, etc. The most effective control principles encountered are: isolation, dilution ventilation, modification of the physical state of the material, and denying emission energy to the materials.

Charge Preparation

Materials to be charged to the furnace must be prepared, i.e., cleaned, weighed, sorted, mixed, dried, etc. These operations may be performed either mechanically or manually. Control principles encountered are identical to those seen for materials handling, but also include the use of heat exhaust ventilation.

Furnace Charging

Charging materials, once prepared, must be introduced to the furnace. Numerous charging methods are employed by the industry. Emissions occur during the charging period because (1) the charging door is open, which allows furnace gases to escape, or (2) charge materials entering are rapidly heated, driving off volatile materials, or (3) controls are not adequate or not provided. The basic principles of successful control seen during the study include: operations control, local exhaust ventilation, and isolation.

Tapping of Slag and Metal

Following the heating of the materials in the furnace, slag and metal (and, occasionally, matte) are tapped from the furnace into ladles or pots or directly into ingot molds. Tapping can either be continuous or intermittent. Emissions emanate from the tap hole, the launder, and the ladle. Effective control principles include local exhaust ventilation and modification of the physical state of the emission source.

Molten Metal Transfer

Although emissions may be created when molten metal is transferred from one vessel to another (e.g., furnace to ladle, ladle to mold, kettle to ladle, etc.), this discussion does not address transfer operations that involve simple pouring of molten metal from one vessel to another as is commonly encountered in slag and metal tapping. In this context, molten metal transfer is defined to mean transfer of metal in pipes, launders, or ladles that are moved through the workplace from one location to another.

Casting

Casting involves pouring molten metal into molds usually to form ingots. Emissions associated with casting may occur from the vessel holding the reservoirs of molten metal to be cast, from the pouring of metal into the molds, and from the molds filled with molten metal before the metal is frozen.

Ingot Cooling and Handling

Casting of ingots may produce employee exposure to fume, heat, and noise during the handling and cooling of the ingot. Principles of control found to be effective include modifying the physical form of the emission source, i.e., cooling the ingot, and barriers. No specific controls were observed to control noise during ingot handling.

Kettle Refining/Alloying

Basic metal products formed in rotary, reverberatory, and blast furnaces must be refined to remove impurities and alloyed to produce special or standard products for sale. These operations typically occur in open kettles. Important principles of control include: local exhaust ventilation, general dilution ventilation, temperature control, and housekeeping.

Flue Gas Handling

Gases from combustion of fuels to heat smelting furnaces entrain fumes and particulates and contain potentially toxic gases such as CO_2 and NO_x. In almost all situations, these gases must be effectively precluded from entering the work environment to prevent significant contribution to employee exposure.

Flue Dust Handling

Process flue gases must be cleaned to remove contaminants before released into the atmosphere. SO_2 may be scrubbed. Particulates are usually separated using cyclones, baghouses, electrostatic precipitators, etc. All particulate separators accumulate flue dust, which may consist of metal fume, dust, combustion particles, fly ash, etc. The handling and recycling of flue dust and the maintenance of flue dust equipment have traditionally been major sources of emissions or exposures. Important principles of exposure control are changing the physical form of the source, enclosure and isolation, local exhaust ventilation, and housekeeping and maintenance.

Maintenance of Equipment

Each smelter supports a crew which maintains process and control equipment in good operating condition. Maintenance activities

invariably expose maintenance workers to unusual exposure situations not normally encountered in routine operations. The major source of control is, traditionally, personal protective equipment such as respirators, asbestos aprons, face shields, etc.

OPPORTUNITIES

Control technology transfer is the adoption by one party of the exposure control strategy, principle, or equipment of another party. For example, in the secondary smelting industry, the adoption of an isolated charge preparation area, which has been shown to be effective in minimizing exposures in adjacent work areas, is a typical control strategy which may be transferable.

Transfer of exposure control technology from one segment of the pyrometallurgical industry to another segment is a goal encouraged by the government and one that is generally acceptable to industry. One purpose of this study was to determine potential opportunities for control technology transfer. Several potential benefits of control technology transfer are:

- Helping industry avoid costly and time consuming duplication of efforts in the development and testing of exposure controls.
- Reducing costs of compliance with regulations.
- Increasing the probability of "first-time" successful control of emissions or exposures.
- Minimizing exposures, thus helping to protect the health of individuals.

To transfer control technology from one segment of the secondary nonferrous smelting industry to others, similar operations must be used. Certain similarities that exist within this industry are:

- All use pyrometallurgical means to reduce, refine, and alloy metal products.
- All handle, mix, and prepare feed materials.
- All employ one or more of the basic furnace types (shaft, rotary, reverberatory, pot, induction, etc.).
- All produce metal products, slag, and by-product wastes.
- All employ some types of process emission control (ducts, baghouses, etc.).
- All create the potential for employee exposure to metal fume and other chemical hazards, and to physical hazards such as noise and heat.

- All are required to meet national OSHA and EPA standards for emission and exposure levels.

Despite these similarities, differences in the details of process equipment, operational techniques, etc., may exist from plant to plant. These differences include:

- the age of process equipment,
- the design of plant equipment,
- the special layout of processes,
- the types of operations employed,
- the materials handling system in use,
- materials being processed/produced,
- employee characteristics (training, work practices, cooperation, etc.),
- structural characteristics of equipment and buildings,
- maintenance practices, and
- local (state and community)regulations.

Because of these differences, control technology transfer is more suited to the transfer of <u>principles</u> of control, as compared with the transfer of the concept of control <u>equipment</u>. For example, suppose plant "A" desires to control emissions during slag tapping. Plant "B" has successfully designed and installed an effective slag tap hood system that captures fume emitted during slag tapping. It may be possible to transfer the principle of <u>emission control at the source</u>, but it may not be possible to transfer the specific plant "B" slag hood system because of space limitations at plant "A". In this case, another hood configuration or modifaction may be designed. Other generally applicable principles of control technology transfer are:

- Control technology transfer has a greater chance of application in new plants being designed as compared with existing plants where retrofit to existing equipment must be accomplished.
- Proprietary process technology and patented technology may not be readily transferable.
- Control technology cannot be transferred until the industry is aware of the available technology.

- Control technology cannot be transferred if it is not economically feasible to do so.

- Successful control technology transfer may require the transfer of the entire control program, not just single elements. (See discussion in Section 2.0 of this volume.)

In this study, the following controls, which might find use in other plants, were identified:

Supplied Air Islands

Supplied air islands were effective in controlling exposures to employees tapping a rotary furnace in an environment with a high background contamination of metal fume (Section 5, In-Depth Survey Report No. 1 for Smelter 2295).

Enclosure of Point Noise Sources

Effective noise control of a hammermill operation was achieved by using an enclosure constructed of concrete blocks (Section 5, In-Depth Survey Report No. 2 for Smelter 1800).

Slotted Ladle Hoods

Application of a slotted hood to evenly distribute the capture zone around the perimeter of the ladle was found to be an effective means of capturing hot, buoyant, and turbulent air above a holding ladle (Section 5, In-Depth Survey No. 4, Report on the Bergsoe Smelter).

Flue Dust Agglomeration

Modifying the physical state of the flue dust reduced exposure from loose dust (Section 5, In-Depth Survey Report No. 4).

Isolated/Enclosed Charge Preparation

Isolation and enclosure of charge preparation effectively reducing exposure to raw materials during charge preparation (Section 5, In-Depth Survey Report No. 4).

IDENTIFICATION OF AREAS NEEDING IMPROVEMENT

During this study, the following areas have been identified as needing improvement. Establishments contacted and visited displayed a spectrum of appreciation for occupational safety and health problems associated with secondary smelting. Some smelters have recognized important hazards and have instituted exposure control programs. The level of sophistication, degree of implementation, and technical applicability of control methods to perceived hazards are variable.

Control Technology Application

Many existing smelters have not applied readily available control technology. Although opinions differ concerning what forms of control technology should or should not be applied, several obvious situations have been observed where simple application of known engineering control methods could substantially reduce employee exposure. All of the following examples of control application involve expenditures of time and money and should receive a careful study through cost-benefit analysis and engineering feasibility evaluation before being selected or recommended for use at specific sites.

Yard paving--
Many secondary smelters have not paved their materials handling areas or portions thereof. Lack of paving complicates prevention of contaminant entrainment by wind, materials handling equipment, and employee foot traffic. In addition, lack of paving precludes effective control of water runoff from rain and washdown/wetting operations.

Enclosure of storage piles--
Several bulk materials received by smelters are stored in piles. Some of these materials (flue dust, drosses, battery plates, etc.) if piled in the open are subject to wind blown particulate attrition and erosion by rainfalls or washdown and wetting procedures. Enclosure of storage piles in buildings would, in some cases, reduce wind attrition and water erosion problems.

Capture of emissions at their source using local exhaust ventilation--
Many parameters must be considered when applying local exhaust ventilation to specific emission sources. Often the configuration of hood structures and routing of ductwork must be subordinate to needs of materials handling, etc. In many situations, this condition results from the retrofit of exhaust ventilation to existing equipment rather than incorporation of local exhaust ventilation into the original equipment design. Situations were observed where local exhaust ventilation could be readily applied to emission sources and where improved control could be achieved by improved engineering of hood design/application. Examples of these situations are:

- Several metal transferring operations utilizing launders lacked any form of contaminant containment at the source. Some smelters have installed local exhaust ventilation at molten metal taps and receiving vessels but use open launders for metal transfer. In some situations, simple covering of launders with metal plates would improve control. In others, extension of existing hoods or use of portable exhaust hoods would be feasible.

- Slag and molten metal cooling in ladles often occurred with no control of fumes at their source. Simple covering of ladles providing additional space under tapping hoods, or installing exhaust ventilated ladle cooling stations could reduce emissions at several specific sites.

- Molten metal and/or slag tapping holes are not uniformly controlled when emission of an important toxic component is present. In some cases, there is a lack of appreciation for the fact that a small percentage of a substance, such as lead in a relatively high melting temperature alloy, may present a significant hazard to health.

Housekeeping--
Settled fugitive particulates are a significant source of workplace contamination at many smelters. The degree of hazard is related to the toxicity of the material and the opportunities for its reintroduction into the atmosphere. Several smelters employed either manual or mechanical dry sweeping to collect settled dust. These sweeping operations reintroduce contamination to workplace air. Other smelters wet down yard and other work areas to suppress dust generation. This technique does not prevent splashes of "mud" from drying on employees' clothing or other-than-work sufaces. Once dried, these splashed materials can become sources of exposure. Central vacuum cleaning systems and washdown procedures that move contaminant accumulations to locations where they can be permanently protected from re-entrainment into workplace air could be applied to good advantage at many locations.

Isolation and Enclosure of Processes--
In several situations, improved control could be achieved by physically separating or isolating "dirty" operations and processes from relatively less polluted work areas, e.g., isolating charge preparation, charging operations, or both; isolating flue dust handling; and isolating furnace operations from kettle or pot refining.

Sound Level Reduction--
Several noise sources could be at least partially controlled by use of sound-absorbing enclosures or barriers, e.g., hammermills and ingot handling equipment.

Preventative and Routine Maintenance

Several control systems were inoperative or severely handicapped by lack of maintenance. In some situations, equipment failures could not be readily corrected because spare parts, etc., were unavailable.

Control Technology Development

Adequate controls do not exist for four particular processes: battery breaking, reverberatory furnace, rotary furnace, and flue dust handling.

Battery Breaking--
Battery breaking at secondary lead smelters generates significant contaminants that are not effectively controlled. Several methods of battery breaking (decasing) were observed, and none of the observed, existing systems appear to adequately control emissions and potential employee exposure. Exposure was created in the feed of materials to the breaking operation, during actual breaking, or in the handling and separation of materials after breaking.

Reverberatory and Rotary Furnaces--
Reverberatory and rotary furnaces used to smelt copper and lead-based alloys are difficult to control effectively. A reverberatory furnace constructed of refractory materials possesses many potential emission sources. Charging and tapping emissions may emanate from discrete, defined sources and be amenable to control. Other emissions emanating from spaces between refractory material, which may occur during various furnace operations, are more difficult to control. No completely satisfactory control of these emissions were observed.

Flue Dust Handling--
Flue dust handling is not satisfactorily controlled at many secondary smelters. A variety of flue dust handling techniques were observed. All observed systems afford potential exposure from leaks in flue dust conveyance systems. In some situations, conversion of the dust to an agglomerated slag may improve control. Flue dusts not amenable to this treatment continue to pose significant control problems.

Harmful Physical Agent Control

Many types of smelting furnaces observed during this study were important sources of noise. Noise generated by furnace burners is largely uncontrolled. Blast air, combustion air, and fuel atomization equipment all involve potentially significant noise emissions. In addition, the reverberation of combustion gases inside furnace cavities also creates significant noise.

Shielding and isolating heat radiating equipment was not an important consideration in the design and installation of many observed smelting furnaces. Radiant heat from furnaces and molten metal is largely uncontrolled at many secondary smelters. Retrofitting of radiant energy controls is feasible in some but not all secondary smelters.

Industrial Hygiene and Safety Programs

In general, all of the observed secondary smelters had weaknesses in their industrial hygiene and safety programs. No smelter was completely equipped to recognize, evaluate, and control occupational safety and health hazards. Substantial improvements are

needed at many establishments in the following general areas to ensure protection of employee safety and health:

- o respiratory protection programs,
- o biological monitoring and medical surveillance,
- o workplace monitoring,
- o employee training,
- o lunchroom and hygiene facilities,
- o personal protective equipment, and
- o audiometric testing.

SECTION 3

RECOMMENDATIONS

The results presented in Section 2 indicate that many improvements in control technology can and need to be made in the secondary nonferrous metals industry. This section recommends additional research and development programs that will help ensure that the improved control technology is made available to the industry. Three categories of recommendations are:

- o industry assessment,
- o toxic chemical/harmful physical agent evaluation, and
- o control technology improvement.

These recommendations are intended to provide NIOSH a course of action that will enable them to: keep abreast of changes or trends within the industry, continually update the data base concerning potential health hazards, and provide meaningful solutions to the control problems presently facing the industry.

INDUSTRY ASSESSMENT

To maintain an accurate picture of the secondary nonferrous metals industry, it is recommended that the data base established in this report be updated continually. The following specific programs are suggested:

- o Quantify the exposures received by workers at each of the smelters to the pertinent toxic chemicals or harmful physical agents (e.g., lead and noise at lead smelters, lead, copper, and noise at copper smelters, etc.) during normal operation at each smelter.

- o Quantify the exposure received by the same workers during maintenance and repair operations (i.e., under conditions where controls may not be operable), such as furnace cleaning, repair of bags in fabric filters, flue cleaning, etc.

These programs should provide the data needed for basing sound judgments concerning additional control technology needs.

TOXIC CHEMICAL/HARMFUL PHYSICAL AGENT ASSESSMENTS

One particularly important research need identified but not addressed during this study was the need to correlate the effect of worker personal hygiene with blood lead levels at varying lead-in-air concentrations. Personal habits such as smoking and fingernail biting are potential difficult-to-control modes for ingesting lead. A study is recommended to develop this correlation so that the expected effect of control technology (designed to reduce lead-in-air levels) on worker health can be better established.

CONTROL TECHNOLOGY IMPROVEMENT

Two areas where NIOSH research and development programs can significantly contribute to improving worker health are developing and testing of control techniques for the secondary nonferrous metals industry. The goal of each of these programs is to determine the cost/benefit of different controls or combinations of controls as applied to the industry. The following research programs are recommended:

- Investigation of improved battery decasing techniques.
- Investigation of wet separation techniques for processing decased batteries.
- Determination of the relative contributions to the workplace of emissions from processes (i.e., furnaces) and from "fugitive" sources such as re-entrainment from the walls and floors. Such information will be valuable in determining the relative need for better process controls versus better housekeeping practices.

It is also recommended that testing or "demonstrating" combinations of controls be conducted by NIOSH at both existing and new smelters. Specifically, the effect of the following controls on exposure to airborne contaminants should be demonstrated:

- lead flue dust agglomeration,
- the English "whitecap" portable supplied air island,
- improved housekeeping (central versus portable vacuum

systems, washdown procedures, pavement characteristics as they affect fugitive emissions, e.g., asphalt versus concrete),

- improved ventilation systems,
- process isolation and enclosure, and
- clean washroom and eating facilities.

SECTION 4

PRELIMINARY SURVEYS

Preliminary surveys were conducted at 22 secondary nonferrous smelting facilities to document processes and controls used to protect workers from harmful physical and toxic chemical agents. Trip reports were prepared for each site visit. These reports describe the smelter raw materials, products, processes, and engineering controls. An industrial hygiene overview is also included that describes work practices, personal safety equipment, potential hazards, and any medical or monitoring program the smelter may employ.

These site visits helped define the industry, determine what the most widely used processes and controls are, and determine qualitatively which controls are most effective. From this information, processes were selected for further study. Criteria used for process selection were widespread use by the industry, apparent effectiveness, and new or novel processes or controls.

Table 2 summarizes the processes seen during the site visits and the engineering control scheme used for these processes. The remainder of this section presents the trip reports prepared for each visit.

Table 2. Preliminary Site Visit Process/Engineering Control Summary

Smelter Number	Process	Air Pollution Controls	Engineering Control Scheme
0030	Lead rotary kiln sweating	Afterburner	Enclosed charging area with local exhaust ventilation
0030	Lead pot furnace refining	Baghouse	Local exhaust ventilation
0960	Brass/bronze rotary furnace smelting/ refining	Baghouse	Local exhaust ventilation; remote pouring stations
1085	Lead blast furnace smelting	Afterburner followed by baghouse	Local exhaust ventilation
1180	Aluminum reverberatory furnace sweating	None	None
1180	Aluminum reverberatory furnace smelting	Afterburner	Local exhaust ventilation of charging well
1300	Lead blast furnace smelting		
1300	Lead reverberatory furnace smelting	Afterburner followed by baghouse	Local exhaust ventilation
1300	Lead kettle furnace refining		
1300	Lead battery decasing	None	None
1800	Aluminum reverberatory furnace smelting	Baghouse	Local exhaust ventilation of charging well
1800	Scrap crushing		Enclosure (Noise)
1800	Thermal scrap drying	Afterburner	None

(Continued)

Table 2. Preliminary Site Visit Process/Engineering Control Summary

Smelter Number	Process	Air Pollution Controls	Engineering Control Scheme
1800	Aluminum demagging--Durham process	Scrubber	Process enclosure
1825	Aluminum reverberatory furnace smelting	Afterburner	Local exhaust ventilation
1825	Lead sweating/insulated wire burning incinerator	Afterburner	None
2090	Lead blast furnace smelting	Afterburner followed by baghouse	Local exhaust ventilation
2090	Lead reverberatory furnace smelting/refining	Cyclone followed by baghouse	Local exhaust ventilation
2090	Lead kettle refining		Local exhaust ventilation
2090	Lead cable sweating	Baghouse	None
2090	Lead rotary furnace dross processing		None
2090	Battery decasing (saws)	None	None
2091	Lead rotary kiln smelting		Local exhaust ventilation
2091	Lead blast furnace smelting	Baghouses	
2091	Lead pot furnace refining		
2091	Battery breaking/wet separation	None	Isolation/enclosure

(Continued)

Table 2. Preliminary Site Visit Process/Engineering Control Summary

Smelter Number	Process	Air Pollution Controls	Engineering Control Scheme
2091	Lead baghouse dust recycling		Enclosed screw conveyor system
2140	Lead blast furnace smelting	Baghouse	Local exhaust ventilation
2140	Lead kettle furnace refining	Baghouse	Local exhaust ventilation
2140	Battery decasing	None	None
2275	Zinc pot furnace refining/alloying	None	General dilution ventilation
2295	Scrap briquetting	Cyclone	Local exhaust ventilation
2295	Brass/bronze reverberatory furnace smelting	Baghouses	Local exhaust ventilation
2295	Brass/bronze rotary furnace smelting	Baghouses	Local exhaust ventilation
2295	Thermal scrap drying	Afterburner	None
2520	Lead pot furnace alloying	None	Local exhaust ventilation
2640	Lead/zinc pot furnace alloying	Venturi wet scrubber	Local exhaust ventilation
2640	Lead/zinc pot furnace alloying	Venturi wet scrubber	Local exhaust ventilation
2640	Lead rotary furnace tapping		Remote pouring booths

(Continued)

Table 2. Preliminary Site Visit Process/Engineering Control Summary

Smelter Number	Process	Air Pollution Controls	Engineering Control Scheme
2780	Lead blast furnace smelting		Local exhaust ventilation
2780	Lead reverberatory furnace smelting	Baghouses	None
2780	Lead pot furnace refining		Local exhaust ventilation
2830	Thermal scrap drying	Afterburner	None
2830	Aluminum reverberatory furnace smelting	Afterburner	Local exhaust ventilation
2830	Aluminum demagging--Durham process	None	None
2830	Brass/bronze rotary furnace smelting	Electrostatic precipitators	Local exhaust ventilation
2830	Lead/zinc pot furnace alloying	Electrostatic precipitators	Local exhaust ventilation
2830	Aluminum rotary furnace dross processing	Baghouse	None
2830	Brass/bronze rotary furnace tapping	None	Remote pouring stations
2895	Copper blast furnace	Baghouse	None
2895	Copper rotary holding furnace	None	None
2895	Copper converter	Baghouse	None

(Continued)

Table 2. Preliminary Site Visit Process/Engineering Control Summary

Smelter Number	Process	Air Pollution Controls	Engineering Control Scheme
2895	Copper anode refining furnace	Waste heat boiler, baghouse	None
2920	Zinc/lead pot furnace alloying		Local exhaust ventilation
2920	Zinc/aluminum pot furnace alloying		General dilution and local exhaust ventilation
3027	Aluminum cylindrical furnace sweating	Afterburner followed by baghouse	None
3027	Aluminum reverberatory furnace smelting	Baghouse	Local exhaust ventilation
3290	Lead blast furnace	Baghouse	Local exhaust ventilation
3290	Lead pot furnace refining/alloying	Baghouse	Local exhaust ventilation
5000	Lead rotary furnace smelting	Baghouse	Local exhaust ventilation
5000	Lead reverberatory furnace smelting	Baghouse	Local exhaust ventilation
5000	Lead kettle furnace refining	Baghouse	Local exhaust ventilation
5000	Lead battery crushing	Wet scrubber	Local exhaust ventilation
Bergsoe	Lead shaft furnace smelting	Afterburner followed by baghouse	Local exhaust ventilation; process isolation and enclosure

(Continued)

Table 2. Preliminary Site Visit Process/Engineering Control Summary

Smelter Number	Process	Air Pollution Controls	Engineering Control Scheme
Bergsoe	Lead rotary furnace smelting	Baghouse	
Bergsoe	Copper induction furnace melting	Louvre style process hood	Local exhaust ventilation
Bergsoe	Baghouse duct recycling	Flash agglomeration furnace	Local exhaust ventilation

PRELIMINARY SITE VISIT

SMELTER 0030

(A Secondary Lead Smelter)

SUMMARY

Smelter 0030 is a small secondary lead smelter. All of this smelter's products are lead-based alloys. A variety of products are made, but no fabrication is done on-site. This facility consists of four areas: scrap receivng, sorting, and storage; rotary kiln furnace and pot furnace area; product storage; and air pollution control. Figure 1 shows the general layout of this smelter. The air pollution control scheme used at Smelter 0030 relies primarily on furnace hooding ducted through either afterburners or baghouses. This smelter uses a rotary kiln type furnace for sweating metals and insulated wire burning and pot furnaces for refining/alloying of lead.

GENERAL

For lead alloy production, Smelter 0030 uses rotary kiln furnace sweating/wire burning and pot furnace refining/alloying. The major raw materials for the smelter consist of both new and old lead, solder, and aluminum scrap. New scrap is defined as scrap produced during the manufacture of a finished product, i.e., borings, turnings, etc., while old scrap is comprised of worn out, obsolete, or damaged articles. The scrap is received by truck, sorted by hand, and stored in the smelter building.

The rotary kiln furnace features a vibrating screen feed system, with the charging well completely enclosed and vented to an afterburner. This furnace is oil-fired and uses natural gas pilots. It is used for sweating scrap as well as burning insulation off wire scrap. The sweated product is poured into buckets, allowed to cool, and then stored until needed.

The smelting operation takes place in two pot furnaces, having capacities of 27,300 kg (60,000 lb) and 11,400 kg (25,000 lb). The actual smelting process is a combination of scrap blending and fluxing. Once the desired metal composition has been obtained, the alloys are pumped into air cooled ingot molds. The cooled ingots are stacked on pallets and stored until delivery.

- o Processes
  - 1 rotary kiln sweating/insulation burning furnace
  - 2 lead refining/alloying pot furnaces

- o Capacity
  - 910-1820 kg/hr (2000-4000 lb/hr) continuous feed rotary kiln
  - 27,300 kg (60,000 lb) lead pot furnace
  - 11,400 kg (25,000 lb) lead pot furnace
- o Employment
  - Approximately 12 production workers
- o Age
  - Approximately 35 years
- o Raw Materials
  - All types of lead scrap including prepared battery lugs, plumbing pipe, chemical tank liners, lead cable, type metal, and solder scrap.
  - Scrap aluminum alloying agents.
- o Products
  - Lead-based alloys including caulking lead, pig lead, and solder.
  - Remelt aluminum sows.
  - Remelt die cast sows.

ENGINEERING CONTROLS

Engineering controls used at Smelter 0030 to limit worker exposure to hazardous agents include:

- o hooding and afterburner for the rotary kiln charging well,
- o hooding of the pot furnaces, and
- o general ventilation of the furnace building.

The complete enclosure of the charging well of the rotary kiln furnace appears to be very effective at removing smoke produced by this operation. The effluent stack from the afterburner was not observed; therefore, no statement concerning effectiveness of the afterburner can be made. The furnace is supposedly operated below the fuming temperature of the materials sweated, however, visible fumes were being emitted from the molten product produced during this operation. No controls were installed to capture these fumes.

The pot furnaces were not in operation at the tie of the walk-through so no statement concerning control effectiveness can be made.

General ventilation provided by the large openings around the building was effective for reducing heat exposure. No excessive exposure to heat or noise was observed.

INDUSTRIAL HYGIENE

Measurements

This smelter does not engage in routine air monitoring for the chemical agents found in the workplace.

Personal Protective Equipment and Hygiene

Respiratory protection--
Respiratory protection is required during the drossing operation, and is worn by most workers during most of the work day.

Other Personal Protection Equipment--
A variety of personal protective gear is worn throughout the smelter. In general, safety shoes, safety glasses, gloves, hard hats, and face shields or goggles are company provided. Aprons are available for people working around the lead pots. In addition, abdominal support belts will soon be provided.

Employee Medical Program

Physical examinations are provided on a semiannual basis. Blood lead levels are included as part of the physicals.

OBSERVATIONS

Raw Materials Receiving

- Raw materials are received by truck, separated by hand, and stored inside the smelter building.
- Diesel-powered lift trucks are used to unload and move scrap materials.
- Primarily, old scrap is utilized by this smelter. This scrap includes: prepared battery lugs, plumbing pipe, chemical tank liners, lead cable, type metal, irony aluminum, irony die cast, and insulated wire.

Furnace Area

- The furnace area of Smelter 0030 consists of a rotary kiln sweating/insulation burning furnace and two pot refining/alloying furnaces.
- The rotary kiln furnace utilizes a vibrating screen continuous feed mechanism which dumps into an enclosed charging well. The charging well is ducted to an afterburner for control of combustible compounds.
- This furnace is fired by using fuel oil and is used for sweating scrap and for insulated wire burning.
- The sweated scrap is cast into large blocks and stored until fed to the refining/alloying operation.

- The pot furnaces are fired by using fuel oil. They are used for refining/alloying lead and have capacities of 27,300 kg (65,000 lb) and 11,400 kg (20,000 lb).
- These furnaces are provided with hoods which are ducted to a baghouse rated at 5000 cfm.
- Once the desired metal composition has been reached, the alloys are pumped into stationary water-cooled molds.
- The drosses produced are hand-skimmed and placed into drums. These drosses and baghouse ducts are sold for reclamation of their metal value.
- The cooled ingots are stacked on pallets and stored until delivery.
- General ventilation is provided for the smelter building by large openings around the perimeter of the building.

Housekeeping

- Wet sweeping is performed in most areas of this smelter.

PRELIMINARY SITE VISIT

SMELTER 0960

(Secondary Copper Smelter)

SUMMARY

Smelter 0960 is a secondary copper smelter. All of this plant's products are copper-based alloys. The final products are in ingot or slab form. This facility consists of five areas: scrap receiving, sorting, and storage; rotary furnace smelting/refining/alloying; ingot or slab casting; product storage; and pollution control.

The air pollution control scheme used at Smelter 0960 relies primarily on furnace hooding ducted to baghouses for gas and particulate control. The rotary furnaces are extensively hooded over both tapping and charging ports and there is a hooding system designed to capture fugitive emissions. A water spray tower is used to cool the stack gas stream entering the baghouse. A separate baghouse is used for the fugitive emissions system and does not require gas cooling prior to the baghouse. These measures appear to be effective and the stacks are clear.

Very little ventilation is supplied to the furnace room. There are no open doors or side vents. Some ventilation is provided by roof monitors with fans. Visibility was moderate and no excessive exposure to heat was observed. However, the furnace building could be a source of potentially hazardous noise exposures.

GENERAL

For copper-based alloy production, Smelter 0960 uses rotary furnace smelting. The major raw materials for the smelter are scrap copper, brass, and bronze (old and new scrap). New scrap is defined as scrap produced during the manufacture of a finished product, while old scrap is comprised of worn out, damaged, or obsolete articles. The scrap is received primarily by truck, sorted, and stored in separate bins. When necessary, scrap may be processed through alligator shears or through briquetting machines, as in the case of radiators. Magnetic separators are also used to prepare the scrap for charging.

The smelting operation takes place in a rotary furnace. The actual smelting process is a combination of scrap blending and fluxing. Caustic soda and borax are used as fluxes in the furnaces. Once the desired metal composition has been obtained, the copper-based alloy is poured into ingot molds, or in some cases,

slabs. The ingots are then loaded onto pallets and stored until delivery.

- o Processes
  - 6 rotary smelting/alloying/refining furnaces
- o Capacity
  - 2 @ 36,320 kg (80,000 lb)
  - 2 @ 18,160 kg (40,000 lb)
  - 1 @ 11,350 kg (25,000 lb)
  - 1 @ 6,810 kg (15,000 lb)
- o Employment
  - Approximately 150 production workers.
- o Age
  - Originally built in approximately 1930
- o Raw Materials
  - Copper, brass, and bronze scrap (all kinds)
  - Alloying agents including copper, tin, lead, iron, zinc, aluminum, and phosphorus
  - Caustic soda
  - Borax
- o Products (in ingot or slab form)
  - Copper based alloys (to customer specifications)

ENGINEERING CONTROLS

Engineering controls used at Smelter 0960 to limit hazardous exposure include:

- o the hoods and damper system over the charging ports on the rotary furnaces,
- o the hooding on the furnace tapping ports,
- o the fugitive gas hoods system,
- o the hooding on the briquetting operation, and
- o the remote pouring stations for furnace tapping.

The rotary furnaces are provided with hoods over the charging port. The furnaces are charged through charging ports provided with water cooled doors using forklift trucks. The hooding over the charging ports is ducted into the fugitive gas ventilation system. This system has its own baghouse which is separate from the stack gas baghouse. Charging was not observed during this visit so no statement concerning effectiveness can be made.

The fugitive fume collecting system involves extensive hooding over the rotary furnaces. The gases and fumes collected in this system are close to ambient temperatures and require no further cooling before being sent to the fugitive fume baghouse.

One of the briquetting machines used at Smelter 0960 is provided with hooding to minimize exposure to particulates generated during this operation. This hooding is also ducted into the fugi-

tive fume ventilation system. This control measure appears to be effective.

The furnaces are provided with remote pouring stations for control of the casting operation. This helps minimize exposure to gas, fume, and hot metal during this operation. No statement concerning potential hazards from the casting operation can be made since this part of the operation was not observed.

INDUSTRIAL HYGIENE

Measurements

- No measurements are taken on a routine basis at this smelter.

Personal Protective Equipment and Hygiene

Respiratory Protection--
Respiratory protection is not required in Smelter 0960. Self-contained breathing apparati are used while changing the bags in the baghouses. In addition, some disposable dust filtration masks are used.

Other Personal Protective Equipment--
A variety of personal protective gear is worn throughout the smelting operation. In general, hard hats, safety glasses, safety shoes, and ear plugs are worn in the furnace areas. In addition, protective clothing and full-face shields are worn during the metal pouring operation. The company-provided laundry service is available for the work clothing.

Lockers, showers, change rooms, and a luncheon room are provided by the company.

OBSERVATIONS

Raw Materials Receiving

- Raw materials at this plant are received primarily by truck.
- Lift trucks are used to move the scrap around. The scrap is separated and stored in a warehouse.
- Scrap undergoes magnetic separation to remove ferrous contaminants and manual inspection to separate different grades of scrap.
- Two briquetting machines are used to compress scrap such as automobile radiators into a suitable charge for the furnaces.
- The radiators are compressed into solid blocks of approximately 0.03 cubic meter (one cubic foot) volume. The blocks are stacked on pallets to facilitate handling of

lift trucks. One of the briquetting machines is provided with a hood to overcome the problem of worker exposure to particulates. The general ventilation around the other machine is apparently sufficient to reduce exposure as no particulate exposure was observed.

- The scrap is analyzed on site for composition by both x-ray diffraction techniques and wet chemical methods.
- Alligator shears provided with guards are used to process some scrap which is too large for feed to the furnaces.

Furnace Building

Rotary Furnaces--

- The furnace building at Smelter 0960 contains six rotary smelting/refining/alloying furnaces. These furnaces vary in size from 6,810-36,320 kg (15,000-80,000 lb) capacity. These furnaces can be operated on either natural gas or fuel oil, depending upon the availability.
- The rotary furnaces are charged from the side using fork-lift trucks.
- The charging port is provided with a water cooled hatch cover and is hooded.
- The rotary furnaces are exhausted to a baghouse through a refractory lines flue.
- The firing mechanisms for the furnaces are a recognized source of excess noise. This problem is currently being studied and plans are to try to reduce burner noise by attaching the burners to the furnaces with less open space around the burners themselves. Isolation or enclosure to minimize noise would probably interfere with normal furnace operation.
- The tapping ports of the rotary furnaces are provided with hoods. Tapping was not observed so no statement concerning effectiveness can be made.
- Oxygen enrichment is utilized in the two largest rotary furnaces.
- Future plans are to recover some of the waste heat in the flue gas and preheat combustion air for the furnaces. Problems being investigated at this time include elimination of fouling of heat transfer surfaces to condensation of fumes.

Casting Line--

- Separate remote pouring stations are provided for the casting operation.
- The casting machines consist of a continuous belt type system of ingot molds which are cooled by both air and water sprays.
- The hoods over the tapping ports cover the pouring spouts. Metal pouring was not observed so no statement concerning effectiveness can be made.

Miscellaneous--

- The actual furnace building is closed with no ventilation openings or doors on the sides. The building is provided with roof monitors with fans.
- The visibilitly in the furnace building was moderate due to the enclosed nature. No excess exposure to heat was observed, but noise exposure is a recognized problem.

Baghouse--

- This smelter operates two separate ventilation/baghouse systems, one for stack gases and one for fugitive type emissions.
- The stack ventilation gases are first passed through a spray tower to reduce the gas temperature to about 375°F.
- Automatic control opens dampers to admit dilution air if the spray tower does not cool the gases to a low enough temperature.
- The cooled gases are then sent to the stack baghouse for control of fume and particulates.
- Nomex bags are used in the stack gas system.
- The fugitive gas ventilation system relies upon dilution to reduce the temperature of the gas stream. No other type of cooling is used prior to the baghouse.
- Dacron bags are used in the fugitive emission baghouse system.
- Each baghouse has a 70,000-80,000 cfm capacity.
- The baghouse dusts, primarily zinc oxide, are sold for use as fertilizer.
- Self-contained breathing units are used when changing bags in the baghouse.

PRELIMINARY SITE VISIT

SMELTER 1085

(Secondary Lead Smelter)

SUMMARY

Smelter 1085 is a small secondary lead smelter which produces a variety of lead alloys, all of which are used in its battery production facility. The engineer controls used in the smelter to limit worker exposure to inorganic lead are typical of the industry. A combination of hooding, afterburner, and baghousing is used to control lead emissions. Future plans include adding an agglomerating furnace for handling the baghouse dusts and increasing the baghouse capacity to allow more hygiene air collection.

GENERAL

Smelter 1085 uses Cupola furnace smelting for lead production and pot furnace refining/alloying to produce a variety of lead alloys. The smelter consists of five areas: scrap receivng and storage; Cupola furnace smelting; pot furnace refining/alloying; pig casting; and pollution control, both air and water.

- o Processes
  - 1 Cupola smelting furnace
  - 2 pot refining/alloying furnaces
  - 1 portable pig casting machine
- o Capacity
  - 36 metric tons (40 tons) ingot/day
- o Employment
  - Approximately 25 production workers
- o Age
  - Built in approximately 1965
- o Raw Materials
  - Scrap batteries
  - Coke
  - Cast iron borings
  - Limestone
- o Products
  - Lead alloys (used for battery production, no outside sales)

ENGINEERING CONTROLS

Engineering controls used at Smelter 1085 to limit hazardous exposure outside include: the primary hooding system on the

Cupola furnace; hoods on the charging and tapping parts of the Cupola; the afterburner on the furnace exhaust duct; and the general plant ventilation.

The Cupola furnace's primary hooding eliminates the majority of the gaseous and particulate emissions from the furnace area. The hooding on the tapping and charging ports captures gas and fumes released during these operations, reducing the exposure of the workers performing these jobs. These gases and fumes enter a propane gas-fired afterburner which is used to eliminate combustible particulates and gases. The off-gases exiting in the afterburner are sent to a spray tower and through U-tube coolers to lower the gas stream temperature. The cooled gases are then sent to a baghouse for particulate control. The baghouse has a capacity of 2.2 m^2/s (22,500 cfm).

The general ventilation provided by the open doors and roof vents reduces exposure to heat and noise. In addition, it provides a margin of safety for occasions when the furnace hoods are overloaded due to an upset condition, etc.

INDUSTRIAL HYGIENE

Measurements and Monitoring

Lead in Air--
Samples are taken monthly using Mine Safety Appliances (MSA) model G pumps for both area and personnel monitoring. A 0.8 micron filter at a 2 L/m flow rate is used.

Blood Lead--
Blood lead levels are taken bimonthly. Anyone with a high blood level is tested on a monthly basis. In addition, work practices are discussed with the employee in an attempt to determine the cause of exposure. The company has a state licensed clinical laboratory for analysis and it does both lead-in-air and blood lead analysis.

Personal Protective Equipment and Hygiene

Respiratory Protection--
Respirator use is required in the enclosed furnace building. Respirators are turned in after each shift and a clean one picked up the next day. The respirators are cleaned and maintained with new cartridges fitted before reuse. The Willson Model 1200 with R-11 filter is being used.

Other Personal Protective Equipment--
- Hard hats, safety shoes, and glasses are required in all areas and are provided by the company.
- Face shields are required while tapping furnaces.
- Uniforms are supplied by the company for smelter personnel.

Lunchrooms--

- o Lunchrooms are provided.
- o Smoking is prohibited except in designated areas.

Safety--

There are written rules governing respirator use. These cover such items as limitations and proper sealing.

Employee Training--

New employees undergo training which covers lead hazards, monitoring programs, lead poisoning symptoms, and use of respirators.

OBSERVATIONS

Raw Materials Handling

Scrap Receiving--

- o Batteries are brought in by truck and weighed.
- o The battery breaker cuts off the top of the battery and allows the acid to drain off. The acid is collected and sent to the water treatment plant. The plates are then removed from the case and stored in an open pile until charged to the furnace.
- o Battery cases are sent to a landfill for disposal.
- o Coke is also trucked in and stored in an open sided, covered shed.
- o A front-end loader is used to transport the battery plates and coke to the furnace charging area.

Furnace Building

Cupola Furnace--

- o Scrap battery plates, coke, and fluxes are charged to the Cupola furnace using an enclosed overhead hopper. The charge is loaded into the hopper by a front-end loader. The hopper runs up an enclosed shaft and empties into the top of the Cupola.
- o The furnace tapping ports are hooded and appear to be effective at collecting the gases and fumes released during this operation.
- o The molten antimonial lead product is poured into water cooled ingot molds.
- o The slag tapping port is also hooded. However, this hood was less effective as gas and fumes were seen escaping during the slag tapping operation. The hooding around this part is ducted to a hopper which collects the dust captured during slag tapping.
- o The charging and tapping doors on the Cupola are manually operated. The primary hooding on the Cupola appears to be effective. The visibility above the furnace is good.

Pot Furnace--

- The pot furnace is charged with ingots produced by the Cupola furnace operation. These ingots are loaded into the open top pot by an overhead crane with umbilical controls.
- The lead in the pot is fluxed if needed and drosses skimmed off. Alloying agents are added to achieve the desired metal composition.
- Once the desired metal composition has been achieved, a portable pigging machine is used to cast the lead into 30 kg (65 lb) pigs.
- These pigs are stacked and stored until needed for battery production.
- The pot furnace operation has not been observed, so no statement concerning exposure can be made.

General--

- Ventilation in the furnace building is provided by large open doors and roof vents. Ventilation is good with no excessive exposure to heat or noise.
- Vacuum sweepers are used to keep the furnace area clean. Some dry, hand sweeping is done when necessary around equipment or to remove large pieces of debris.

Pollution Control Equipment

Wastewater Treatment--

Acid collected during the battery breaking operation is channeled to the treatment plant where it is stored in a tank. Here it is neutralized and released into the sewer system. Possible recovery and sale of the acid is being investigated.

Air Pollution Control--

- Gas and fumes collected by the hooding systems on the furnaces are first sent to a knock-out vessel and then into a propane fired afterburner. In the afterburner, combustible particulates and gases are oxidized to carbon dioxide.
- The effluent from the afterburner is sent to a water spray tower and U-tube coolers to reduce the temperature of the gas stream entering the baghouse. In addition, diluted air can be bled into the stream if necessary.
- The cooled gas stream then enters the baghouse where particulate removal is achieved.
- The baghouse appeared to be effective as the stack was clear.
- The particulates collected in the baghouse are fed to a ribbon blender where they are mixed with water to minimize the dust problem.
- The baghouse dust is then loaded into dump trucks using a front-end loader.

General--

- Vehicles in the smelter area are propane powered.
- Workers were observed to be wearing all the safety equipment required for their job.
- The lead oxide process was not observed.

PRELIMINARY SITE VISIT

SMELTER 1180

(Secondary Aluminum Smelter)

SUMMARY

Smelter 1180 is a small secondary aluminum smelter. This smelter produces a variety of aluminum alloys which are sold for use in die castings, sand castings, and permanent castings. The aluminum smelter consists of five areas: scrap receiving and storage; scrap sweating; reverberatory smelting/alloying; ingot casting; and product storage.

This furnace has its own stack, and no pollution control equipment is used on it. The processed gases, from the reverberatory furnace, exit directly through the main stack. These gases and fumes are collected by the hood over the reverberatory smelting furnace charging well, and are passed through an afterburner to the main stack, which eliminates combustible particulates and gases. The afterburner appears to be effective and both stacks are clear.

General ventilation for the reverberatory furnace room is provided by large open doors and portable fans. Local exhaust ventilation of the casting operation is provided by a roof fan. In addition, the furnace operator is provided with an enclosed air-conditioned room. The sweating furnace is actually outside with a shed type roof over it. General ventilation is good around both furnaces.

GENERAL

For aluminum production, Smelter 1180 uses reverberatory sweating and smelting to produce a variety of aluminum alloys. The major raw material for the smelter is scrap aluminum of all types. Most of the scrap is brought in by truck, weighed, and separated. The scrap, composed of aluminum and other higher melting point metals, is fed to the sloped hearth sweating furnace. In this furnace the aluminum is selectively melted or "sweated" and collected in a holding chamber. The higher melting point metals remain solid and are removed and sold to other scrap processors.

The smelting operation takes place in a reverberatory furnace. The actual smelting process is a combination of scrap blending and fluxing. Potash and aluminum fluoride are the fluxes used to reduce the magnesium content of the melt. Once the desired metal composition has been obtained, the aluminum is poured into ingots

and allowed to air cool. The hardened ingots are then loaded onto pallets and stored until delivered.

- o Processes
  - 1 sloped hearth reverberatory sweating furnace
  - 1 reverberatory smelting furnace
  - 1 moving belt casting machine
- o Capacity
  - 20 metric tons of aluminum per day (smelting furnace)
  - 38.2 metric tons of aluminum per day (sweating furnace)
- o Employment
  - Approximately 24 production workers
- o Age
  - Built in 1949
- o Raw Materials
  - Aluminum scrap (all kinds)
  - Potash
  - Aluminum fluoride
  - Copper
  - Silicon
- o Products (all in ingot form)
  - Die cast alloys
  - Sand cast alloys
  - Permanent mold alloys

ENGINEERING CONTROLS

Engineering controls used at Smelter 1180 to limit hazardous exposure include:

- o the reverb charging well hood and afterburner,
- o the local exhaust fan above the casting machine, and
- o general plant ventilation.

The primary hooding and afterburner equipment eliminate gaseous and particulate emissions from the charging well of the reverberatory smelting furnace. The gas fired afterburner is the only pollution control equipment used. It appears to be effective for reducing particulate emissions since the stack gas is clear. The gases from the sweating furnace are exhausted directly through a stack with no other control. The building, that contains the smelting furnace, has several large openings to allow free air circulation. In addition, portable fans are used to provide local ventilation and a roof mounted fan aids in ventilating the casting operation. The general ventilation was sufficient to prevent any significant heat exposure. No excessive noise levels were observed.

The sweating furnace is not contained in a closed building, but has a roof over it with open sides. Ventilation is good with intermittent high particulate loadings during scrap removal. No hoods were in use to collect particulates escaping from the

sweating furnace charging door. Molten metal tapping was not observed at either the sweating or smelting furnace.

INDUSTRIAL HYGIENE

Measurements: None

Medical Monitoring

Employees are required, after 30 days, to take a physical examination with periodic examinations thereafter. Urinary fluoride levels are checked as part of each examination.

Personal Protective Equipment

- Safety goggles are worn by furnace tenders.
- Safety helmets are worn by most workmen.
- Gloves are worn as needed by workers.
- Faceshields, and reflective flame retardant clothing are not worn.
- Respirators are supplied but not required. No workers were wearing respirators during our visit.

OBSERVATIONS

Raw Material Storage

- Scrap metal is stored in piles on the warehouse floor to keep it dry. These piles are kept separate in order to make charge blending easier.
- No hazards were observed in this area. The aluminum scrap is fairly inert and relatively harmless.
- A front-end loader and forklift were used to transport the scrap.
- Dust was not a problem in this area.

Sweating Furnace

- Scrap to be sweated was charged and removed from the furnace manually. A rabble was used to move the scrap inside the furnace.
- The furnace had a sloped hearth and two chambers, one where the aluminum was sweated from the scrap and one for holding the molten aluminum.
- The furnace had few leaks except for the charging door. No hood was provided over the charging door to control particulates. Workers charging the furnace wore goggles but no respirators. General ventilation was good in this area and high particulate levels occurred only intermittently.
- The sweated scrap is removed from the furnace manually, allowed to cool on the ground, then sorted and stored in

piles in the yard. The used scrap is then sold to other metal processors. The cooling scrap is a source of fume but general ventilation is good in this area.

- The furnace was exhausted directly to a stack with no air pollution control. The stack was clear and emissions did not seem to be a problem.
- Molten metal is tapped from the holding chamber and runs down a launder into a transfer ladle which sits in a pit. No hoods are provided for this operation but since the furnace building has open sides, general ventilation is good and hooding may not be necessary. However, tapping was not observed during our visit.
- Figure 1 is a diagram of the sweating furnace.

Reverberatory Furnace

- The specification alloys are produced in a single reverberatory furnace (capacity 20 metric tons per day).
- Figure 2 is a diagram of the reverberatory furnace. As illustrated, this furnace has a combination exhaust system. The furnace gases are drawn directly into the main stack. Any gases or particulates generated in the charging well are collected in a hood, sent to an afterburner and combusted, then re-combined with the furnace gas before entering the main stack.
- On the sides of the furnace, cleanout doors are provided. These doors are closed during normal operations. There are no significant leaks from the furnace.
- The furnace is tapped on the south side. Here the metal flows through a glass fiber bag to remove lumps and then flows into a casting machine. Ingots are air cooled, manually loaded onto carts, then sent to storage where they are bound onto pallets. A 48-inch ceiling fan exhausts any emissions from the casting operation.
- Emissions from the charging well are minor and are effectively collected by the open hood over the well. Such a hood is effective for this process because of the relatively small quantity and low toxicity of the materials handled. It would not be useful for controlling emissions from wells of molten lead, arsenic, or other more hazardous materials. AlF_3 and potash are used as flux to remove magnesium from the melt. Flux is spread over the charging well and manually stirred into the melt using a rabble (which resembles a long-handled metal hoe). During this operation, the laborer using the rabble is not exposed to any significant concentrations of hazardous agents. During extremely hot weather, heat exposure may be a problem. However, since this is an intermittent job, no excessive exposure to heat is involved.
- No significant hazards exist near the reverberatory furnace. General ventilation and visibility are good, noise levels are low, and the workroom is uncrowded.

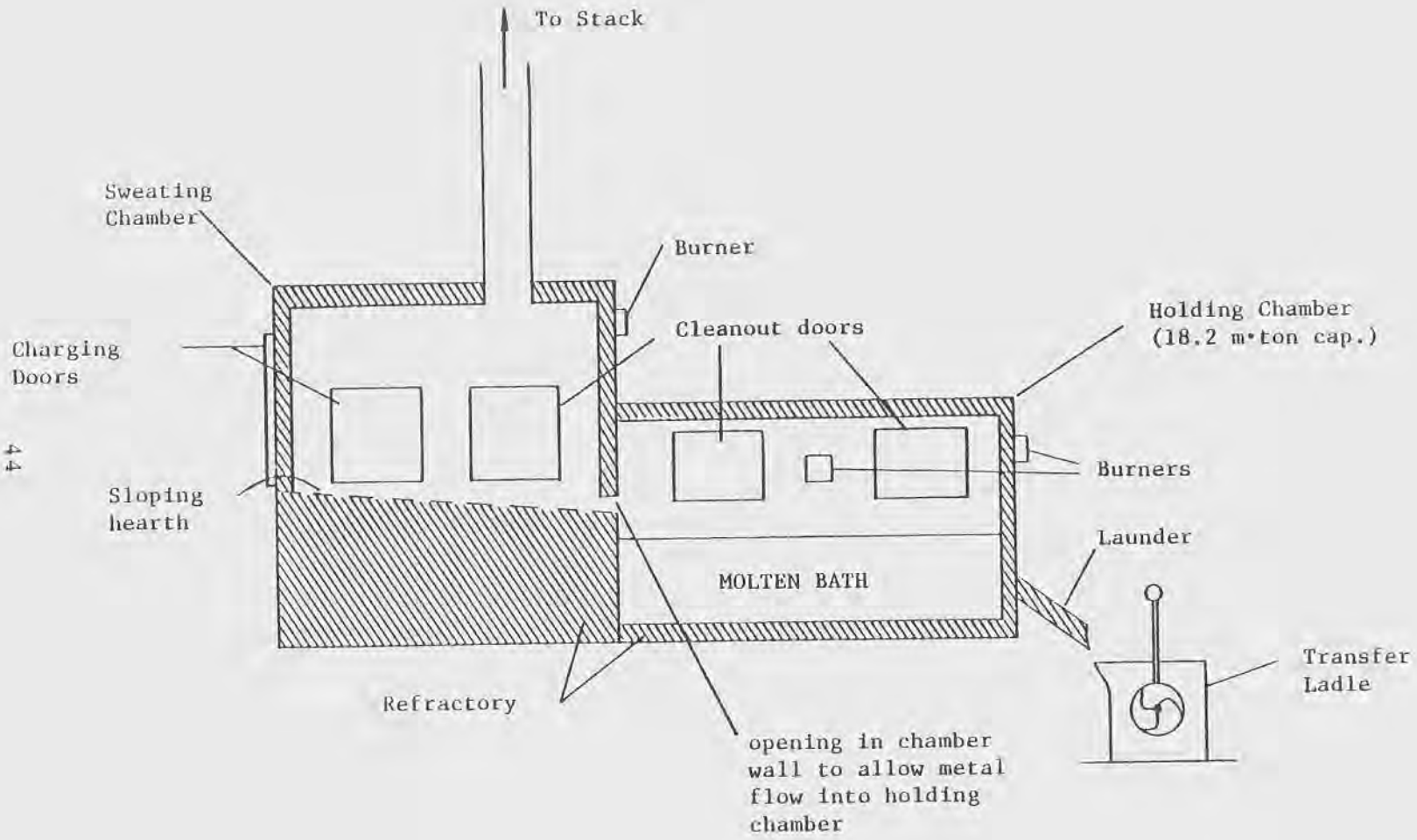

Figure 1. Smelter 1180, aluminum sweating furnace.

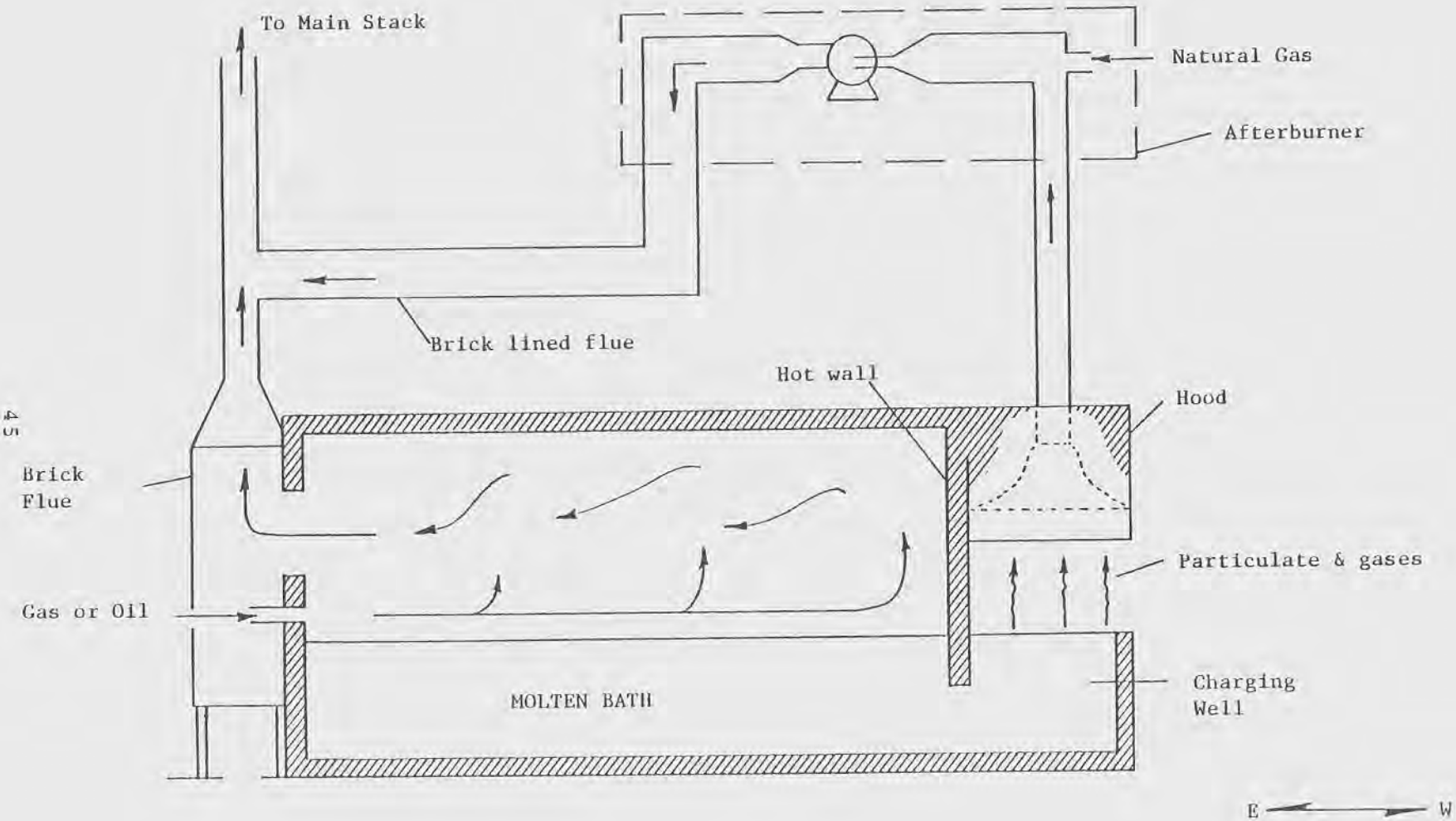

Figure 2. Smelter 1180, aluminum reverberatory furnace.

General

- Smelter 1180 is a small to medium sized secondary aluminum smelter. Few hazards exist because of the low toxicity of the materials handled.
- Gaseous fluxing at this smelter was discontinued. As a result, the smelter is less hazardous than plants where chlorine or fluorine gases are present.
- Controls used are adequate but do not represent the most effective controls available. This smelter is a good example of where only general ventilation and a minimum of local exhaust ventilation are necessary to control workroom hazards.
- Further investigations of chlorine/fluorine fluxing processes at secondary aluminum smelters should be done because these processes seem to present the only significant exposure problem in this industry.

PRELIMINARY SITE VISIT

SMELTER 1205

(Secondary Copper, Brass, and Bronze Smelter)

SUMMARY

Smelter 1205 is a medium-size secondary copper, brass, and bronze smelter. In addition to copper-based alloys, lead and zinc alloys are produced. The smelter consists of five areas: scrap receiving, sorting, and storage; copper-based alloy production, consisting of rotary furnaces and rotating cylindrical U.S. furnaces; lead and zinc alloy production, consisting primarily of pot furnaces; product shipping and storage; and air pollution control.

The air pollution control scheme used relies primarily on furnace hooding ducted to baghouses for control of gas and particulate emissions. The small rotating cylindrical U.S. furnaces are provided with hoods which cover the charging end of the furnace. The other end is connected to a flue. The large rotary furnaces are provided with hoods over the pouring spouts.

General ventilation for the furnace areas is provided by open doors, roof vents, and a general openness throughout the plant. Because the plant is located in a mild climate, the natural ventilation is sufficient the year round.

GENERAL

Smelter 1205 uses rotating cylindrical U.S. furnaces and rotary smelting for producing copper-based alloys. The major raw materials for the smelter are new and old scrap copper, brass, and bronze (wire, ornaments, radiators, etc.). The new scrap is defined as having been produced during the manufacture of a finished product while the old scrap is comprised of worn out, damagged, or obsolete articles. The scrap is received primarily by truck, sorted, and stored until needed. Turnings and other loose materials are briquetted in two briquetting machines. If necessary, the scrap can be passed through a magnetic separator.

The cylindrical U.S. furnaces rotate during the smelting operation and are tilted to pour the alloy. The rotary furnaces are rotated only to pour the alloy. The actual smelting process is a combination of scrap blending and fluxing. Once the desired metal composition has been obtained, the copper-based alloy is poured into ingots.

In addition to the copper-based alloys, this smelter produced lead- and zinc-based alloys. These alloys are produced primarily in port furnaces. A reverberatory smelting furnace and a Cupola furnace are also used in this smelting process. The major sources of lead are scrap and lead pigs purchased from primary producers.

- o Processes
  - 2 U.S. type brass melting furnaces
  - 2 rotary brass melting furnaces
  - 1 copper crucible furnace
  - 4 zinc melting kettles
  - 10 lead alloying pots
  - 1 lead reverberatory smelting furnace
  - 1 lead or brass slag Cupola furnace
- o Capacity
  - Missing information
- o Employment
  - 60 to 70 production workers
- o Age
  - Missing information
- o Raw Materials
  - Copper, brass, and bronze scrap (all kinds)
  - Lead-based scrap (all kinds sxcept batteries)
  - Pure zinc ingots
- o Products
  - Copper-based alloys
  - Lead alloys
  - Zinc anodes

ENGINEERING CONTROLS

Engineering controls used to limit hazardous exposure include:

- o the hoods over the charging end of the brass U.S. furnaces,
- o the hooding over the tapping ports on the brass rotary furnaces, including the hoods over the holding ladles at the casting point,
- o the hoods over the pots in the white metal production area, and
- o the tightfitting water-cooled charging port and door.

The hoods over the charging end of the U.S. furnaces are track mounted to allow movement away from the furnace. They must be moved away while the furnaces are tilted for pouring. During this period, there is very little control of the gases and fumes emitted from the furnace. The hoods are also fitted with a door which can be opened for use during the slagging operation. The ventilation system associated with these hoods is designed to move over 1.42 Nm^3/s (3000 ft^3/min) of air. These hoods did not collect all of the visible fumes produced during the

normal firing of these furnaces and captured very little of the fumes emitted during pouring.

The rotary brass alloying furnaces are provided with close fitting hoods over the tapping ports. These hoods swing down when the furnaces are rotated for tapping. The control of the casting and skimming operations is done by the use of a separate local exhaust ventilation system with a capacity of 2.83 Nm^3/s (6,000 V ft^3/min).

The engineering controls used to reduce charging emissions from the rotary furnace rely on two principles: providing sufficient draft at the flue opening to assure excellent capture characteristics, and use of a tightfitting water-cooled charging door and jacket which minimizes warpage and reduces emissions. So much draft is provided at the flue opening that a draft adjusting bypass is utilized to assure that overdraft does not occur. Visual observations indicated that very little fugitive emissions occurred during the charging operation.

The hoods over the pot furnaces used in the white metal operation have moveable doors which allow complete enclosure of the furnace opening. Most of these operations are conducted at temperatures below the fuming temperatures of lead. No visible emissions were emanating from these processes; therefore, no statement concerning effectiveness can be made based on visual observations.

INDUSTRIAL HYGIENE

Measurements

Environmental and biological monitoring is done at the smelter.

Personal Protective Equipment and Hygiene

Respiratory protection is required for some operations especially in the lead alloying areas.

A variety of other personal protective equipment is worn at this smelter. Hard hats, safety shoes, and safety glasses are required in all areas of the smelter. In metal pouring areas, spats, heat shield aprons, gloves, and face shields are typically worn. Dark glasses are also worn in some areas of the smelter.

OBSERVATIONS

Raw Materials

- Raw materials at this plant are received by truck and by rail. The scrap is typically stored in an open yard until ready for use.

- The incoming scrap, especially borings, may undergo manual and/or magnetic separation.
- Some scrap material such as wire and radiators is briquetted to produce a more suitable feed to the furnace. Two machines are used for this operation. There is no emission control on these machines.
- Long scrap items, such as condensor tubes, are cut to shorter lengths in shears.
- Skips are loaded with scrap to facilitate furnace charging. Forklift trucks are used to move scrap and skips around the smelter.
- Dusty material is hosed down before briquetting, charging, handling, etc.

Furnace Building--Copper Base Alloy Production

- The copper base alloy production area consists of two U.S. rotating cylindrical furnaces, two rotary furnaces, and one pot furnace.
- The U.S. furnaces have a capacity of 1820 kg (4,000 lb) each and the rotary furnaces have capacities of 13,640 kg (30,000 lb) and 18,180 kg (40,000 lb).
- The U.S. furnaces are of front feed design and are hand charged. These furnaces are provided with swing-away burners to facilitate charging.
- The furnaces are tilted to pour the alloy into 910 kg (2,000 lb) ladles which are used to feed a stationary casting line. The casting ladle moves on an overhead monorail system.
- The stationary casting line consists of water-cooled ingot molds with a conveyor system in the trough. The molds are hand tipped, dumping the hardened ingot into the water-filled trough for further cooling. The conveyor system dumps the ingots into tote boxes.
- These furnaces are provided with large hoods over the charging end of the furnace. These hoods move away to allow tilting of the furnaces for pouring.
- The other end of the furnace is attached to the flue system by a duct which also swings away during pouring.
- The firing mechanism for the furnace is a source of noise. In addition, heat may be a problem directly in front of the furnace.
- The two rotary furnaces are located in the same building as the U.S. furnaces.
- These furnaces are provided with water-cooled charging doors which can remove 1.5×10^6 Btu/hr of heat.
- The furnaces are charged using a hoist to lift skip-hoppers filled with scrap to the charging level.
- No engineering controls are provided over the charging port for the rotary furnaces. The draft provided by the flue is used to control emissions during the charging operation.

- During charging, the gas burner is shut off, the draft is increased to maximum, the charging skip is raised to the charging port, the charging door opens, the charging hopper settles down on the jacket, and the skip is unloaded.
- Visual observations indicated that very little fugitive emissions occurred during charging.
- The tapping ports are provided with swing-away close fitting hoods which are ducted to a baghouse.
- These furnaces are tapped to an automated casting line which is provided with a hood over the actual metal pouring
- location.
- The casting line consists of a conveyor type system of water-cooled molds.
- Hooding is provided over the casting line to remove steam produced during cooling of the ingots.
- The casting line is also provided with a vibrator to loosen the ingots from the molds. This assembly is enclosed and insulated to reduce exposure to noise.

Furnace Building--White Metal Operation

- The white metal alloying operation takes place in a separate area of the furnace building than the copper-based alloys.
- Lead-based alloys are produced in pot furnaces.
- The drosses formed during the smelting/refining operation are hand-skimmed and reprocessed to recover the metal value.
- Once the desired metal composition has been reached, the alloy is pumped to an automated casting line.
- This casting line uses water-cooled ingot molds and is a conveyor type assembly.
- The produced ingots are then stacked and either stored until delivery or used in the fabrication area of the smelter.
- This smelter has a solder casting/drawing operation and a lead extrusion operation.

Baghouse Buildings

- Two baghouses for control of fumes and particulates which are collected by both the fugitive hoods and the process gas control systems are used.
- The small baghouse has six chambers with 16 bags per chamber and is rated at 9.44 Nm^3/s (20,000 ft^3/min). This baghouse is used for only the copper-based alloy operations.
- The bags used are 0.5 M (18") diameter by 6 M (20') long.
- The large baghouse contains seven chambers with 33 bags per chamber. This baghouse is rated at 17.5 Nm^3/s (37,000 ft^3/min). Four chambers are allocated to copper-based

alloys while three chambers are used for the white metal operations.

- The bags used here are 0.5 M (18") diameter by 9 M (30') long.
- The flue dust which consists primarily of lead oxide from the white metal operation and zinc oxide from the copper-based alloy operation is sold.

PRELIMINARY SITE VISIT

SMELTER 1300

(Secondary Lead Smelter)

SUMMARY

Smelter 1300 is one of the newer and larger secondary lead smelters in the country. Most of the major processes are equipped with hoods to limit worker exposure to inorganic lead. However, the smelter is not yet in compliance and is in process of submitting an abatement plan to OSHA. Additional hooding and baghouse capacity are one part of the plan; an enclosed raw material conveying system is another. When these modifications are complete, this smelter will have the most complete engineering control system we have seen to date.

GENERAL

Smelter 1300 operates 2 blast furnaces, 1 reverberatory furnace, and 10 kettles. They produce both hard and soft lead. There are no manufacturing operations on the smelter site. The smelter consists of seven major areas: raw material receiving; battery breaking; hard lead department; soft lead department; casting; storage; and baghouse/scrubber. Major products are 29.5 kg (65 lb) ingots (pigs) of soft lead, hard lead, and antimonial lead alloys.

Plant Descriptors

- o Age
  - Constructed 1970-1971
- o Production
  - 43,600 m tons/year (hard and soft lead)
- o Raw Materials
  - Scrap from auto and industrial lead-acid storage batteries, as well as scrap from auto and industrial battery manufacturing plants
- o Products
  - 29.5 Kg (65 lb) ingots (pigs) of soft (pure) lead and various antimonial alloys
- o Plant Employment
  - Approximately 100 employees including: 10 supervisors; 1 safety person; 5 officers; 10-14 maintenance personnel; 18 furnacemen; 18 kettle floor, smelter helpers; 11 battery breaking workers; 10 1-year laborers; 3 baghouse workers; 2 shipping and receiving workers; 4 cover crushing workers

- o Operating Shifts
  - 3 shifts/day, operates 11 days then closes down 3 days for maintenance

ENGINEERING CONTROLS

Process hooding was the most common engineering control used at this smelter. Nearly every potential source of lead fume or dust was hooded or partially enclosed and ventilated. The ventilation system consists of the following:

- o blast furnace charging floor enclosure/ventilation,
- o blast furnace slag tap, lead well, and launder hooding,
- o holding, refining, and casting kettle hooding,
- o reverberatory furnace slag and bullion tap, sample port hooding, and
- o casting machine enclosure/ventilation.

All collection points were vented to a sanitary baghouse. The sanitary baghouse has a capacity of approximately 23.6 m^3/s (60,000 cfm). Figure 3 depicts the smelter ventilation system.

Process off-gases from the two blast furnaces and the reverberatory are combined in an afterburner. The waste heat from the reverberatory furnace gas is sufficient to combust all of the CO and hydrocarbons present in the blast furnace off-gases. The off-gases exit the afterburner and enter a cooler/baghouse/scrubber system for removal of particulates and SO_2.

INDUSTRIAL HYGIENE MEASUREMENTS

Air Monitoring

Personal and work area samples are gathered at two-month intervals in the most contaminated portions of the plant. Less contaminated areas may go several months without being monitored. Table 3 contains data representing employee exposures in this plant. The percentages shown are based on air sampling performed during 1976.

Blood Lead Monitoring

Employees are sampled monthly to determine blood lead levels. Persons with high levels of blood lead (i.e., over 80 micrograms Pb/100 grams of whole blood) are rechecked immediately. A second high value precipitates a medical examination and frequent blood lead determinations until the blood lead level returns to a safe level. Table 4 contains data which indicate the status of employee blood lead concentrations at this plant. The percentages shown are based on blood samples collected during 1976.

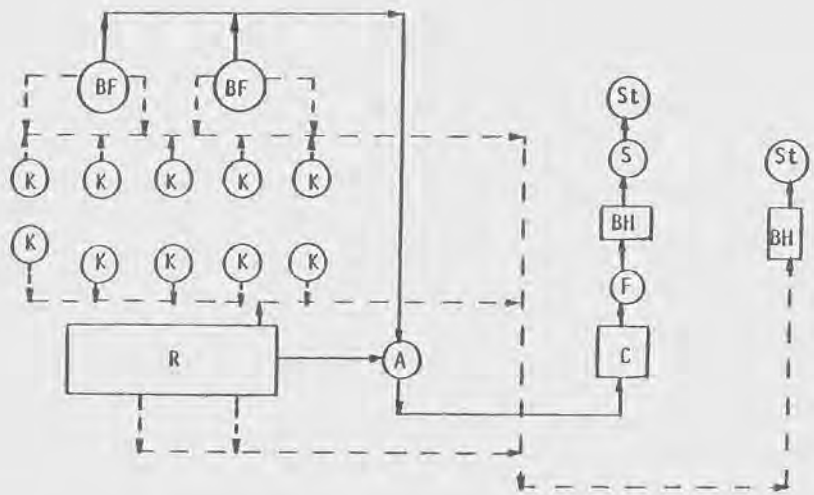

BF - blast furnace
K - kettle
R - reverberatory furnace
A - afterburner
C - cooler
BH - baghouse
F - fan
S - scrubber
St - stack

———— process gas
- - - - - - - - sanitary ventilation

Figure 3. Ventilation system, Smelter 1300.

Table 3. Percentage of Smelter Employees With Average Exposures to Airborne Lead*

	Average Breathing Zone Lead-In-Air Concentration ug/m^3			
	<50	50 - 99	100 - 199	200+
Percent of smelter employees with average exposure of	24%	0	17%	59%

*Data presented in this table are based on air monitoring results obtained in 1976. Since most sampling was performed in high exposure areas, smelter representatives assisted in applying the biased data to the total plant workforce.

Table 4. Percentage of Smelter Employees With Specific Ranges of Blood Lead Levels**

	Blood Lead Level (ug of lead/100 grams of whole blood)			
	<60	60 - 69	70 - 79	80+
Percent of smelter employees with blood lead levels of	12%	20%	22%	46%

**Data presented in this table are based on blood lead monitoring results obtained in 1976.

EMPLOYEE HYGIENE

Showers/Lockers--
Employees store work clothing in lockers and change before starting a shift. All employees shower before leaving the work premises.

Work Clothing--
The plant provides one change of clean work clothing each day. Safety-toe shoes or rubber boots with metatarsal protectors are provided to employees.

Eating/Smoking--
No eating or smoking is permitted in the smelter workplace. Employees are expected to wash before eating or smoking.

Respirator Protection--
Respirators are turned in at the end of each work shift, cleaned, and equipped with new cartridges.

Personal Protective Clothing and Equipment

Footwear--
Safety-toe shoes or boots (some with metatarsal protectors) are worn by all employees.

Eye Protection--
Safety glasses are required in all work areas. Face shields are required in areas where contact with battery electrolyte (sulfuric acid) is likely.

Head Protection--
Hard hats are required in all work areas.

Body Protection--
Work clothing (trousers and long-sleeve work shirts) is worn in all work areas. Impervious aprons and gloves are worn in operations where contact with acid is likely.

Respirators--
Employees are required to wear respirators in all work areas of this plant. Dual cartridge, half-facepiece, air-purifying respirators approved for protection against dusts and fumes are utilized.

WALK-THROUGH OF PLANT

Raw Materials Receiving

Scrap batteries are received primarily by truck trailer. Some batteries are stored on pallets in the yard area but most are unloaded directly to the battery breaking building. Other raw

materials like coke and scrap iron are stored in open dump bins and constructed with concrete walls and floor. Front-end loaders are used to move raw materials in the yard area. Tenant dry sweepers are used in the yard area to control build-up of settled dust.

Battery Breaking

Battery breaking is done in a warehouse type building with a concrete floor and a large door to permit entry and exit of front-end loaders. Truck trailers carrying scrap batteries are backed up to the battery breaking building. Workmen manually separate rubber-cased from polypropylene-cased batteries. Polypropylene batteries are fed to a hammermill. Rubber batteries are fed to hydraulic shears which cut off the battery tops so plates can be removed.

The hammermill for breaking of polypropylene batteries deposits crushed materials on the floor of the building adjacent to the mill. Since the batteries are full of electrolyte when received, this operation does not generate airborne dust. Acid liberated from batteries in this process is channeled to sumps and pumped to a neutralization and clarification facility. Much of the ancillary equipment and enclosure around the hammermill are constructed of corrosion resistant materials. Crushed material is removed by a front-end loader to a covered stockpile building where it remains until fed to the smelting furnaces. This crushed material contains remains of all components of the polypropylene batteries, i.e., plates, separators, cover, cases, etc.

Rubber-cased batteries are moved to the hydraulic shears on conveyor lines. The shears can handle four to five batteries at once. The shears operate at slow speed to minimize splashing of acid, etc. During the shearing process, acid runs out of the batteries onto the floor to sumps, and finally the neutralization and clarification process begins. Rubber battery tops containing intercell connectors, terminals, etc., are segregated and removed to the stockpiling building. Rubber battery cases are separated, crushed, washed, and shipped to a landfill for disposal. Plates, separators, and other internal components of rubber-cased batteries are removed from the battery breaking building by a front-end loader and taken to the stockpile building.

In this area, it is required that employees working in the battery breaking operation wear aprons, gloves, safety-toe boots with metatarsal protectors, safety glasses, faceshields, hard hats, and work clothing with long sleeves.

Stockpile Building and Furnace Charging

Materials separated in the battery breaking process are stored in the stockpile building in segregated piles. Materials from the various piles are moved to the furnace charging equipment by small payloaders as needed.

Blast furnaces are fed by dumping material from the payloader bucket into a weigh-hopper which is contained under a hood. The payloader operator deposits the proper amount of material into the hopper and then activates the system. The hopper is mechanically dumped into the top of the blast furnace. During the dumping process, flue gases from the furnace are shunted around the charging thimble. The weigh-hopper station is hooded to capture any furnace effluent which may be released during the charging operation. The exhaust air stream from this hood is routed through a baghouse which handles air from all other local exhaust hoods in the plant. Flue gases are handled by a separate air cleaning system.

There are two blast furnaces at this smelter and both are charged through weigh-hopper dumping systems like the one just described. Rubber-case battery tops and reverberatory furnace slag are fed to the blast furnace through these hoppers. Ventilation control of charging hoppers appeared to be good.

The reverberatory furnace is charged with scrap polypropylene battery materials by a differnt process. Charging materials are deposited by payloader on a vibrating conveyor. The materials are then transferred to a conveyor belt which supplies the ram-feed system for the reverberatory furnace. The vibrating conveyor is hooded; the hood is equipped with side curtains to control loss of material and vented to a separate dust collector.

Blast Furnace Operation

Blast furnaces are charged with crushed battery materials, plates, and materials from rubber-cased batteries. Coke, scrap iron, limestone, drosses from the kettles, and slag from the reverberatory furnaces are also charged. As mentioned earlier, flue gases from blast furnaces are processed through air pollution control equipment. The flue gas passes from the blast furnaces through an afterburner which also handles reverberatory furnace flue emissions. This afterburner operates on waste heat from the furnaces and the heating value of the contaminants in the stream (i.e., CO, hydrocarbons, etc.). From the afterburner, the flue gas stream passes through U-tube coolers, a fan, and into the metallurgical baghouse. From the baghouse, the air stream passes through a venturi-scrubber that contains a caustic solution that is used to scrub out sulfur oxides. From the scrubber, the air stream is released to the atmosphere.

In addition to flue gas controls, blast furnaces are equipped with local exhaust ventilation over the slag tapping ports and lead wells. The slag ports are hooded in a manner so that small wheeled pots can be totally enclosed in the hood while slag is topped into them. The pots remain in the hood until the slag has cooled. The exhaust air stream from these controls is ducted to the sanitary baghouse. These hoods appeared to be well designed; however, slag tapping was not observed during the walk-through tour. Slag from blast furnace operations is hauled to a landfill for disposal.

The lead well on each blast furnace is hooded and local exhaust (which is ventilated with the air stream) is ducted to a baghouse. Molten lead flows from the blast furnace lead well (by gravity) into refining kettles. The relatively short trough which transfers the molten lead is also hooded. These controls on the lead well and trough appeared to function adequately.

Reverberatory Furnace Operation

This smelter has one reverberatory furnace. The furnace is of top feed design and is water-jacketed halfway up the walls. It is charged primarily through a ram-feed mechanism which is hooded and the exhaust air stream ducted to a baghouse. Baghouse dust is also fed to the furnace. From the screw conveyor in the baghouse, the dust is tranported by conveyor and bucket elevator to a top side charging port on the furnace. This charging port is enclosed and controlled.

Drosses (containing antimony) from kettle refining are charged to the furnace using a skip hoist to a top side charging port. Again, this port is hooded and controlled. This skip hoist operation saves recycling the drosses all the way back to the conveyors feeding the primary ram-feed mechanism. Kettle drosses (containing copper) are recycled to the blast furnaces via the weigh-hopper charging system. The slag tapping port on the furnace is hooded with exhaust air ducted to the sanitary baghouse. This hood appeared to adequately contain emissions from the furnace during the slag tapping operation which was observed during our walk-through visit. Slag from the furnace is collected in small wheeled pots which roll in under the slag port hood. The slag is allowed to cool and then is recycled to the blast furnaces for further metal recovery.

Flue gases from the reverberatory furnace and the two blast furnaces pass into an afterburner. The afterburner is located adjacent to the reverberatory furnace.

The lead tapping well on the reverberatory furnace and its associated molten lead handling troughs are hooded in a similar fashion as corresponding equipment on the blast furnaces. The

reverberatory furnace is not completely enclosed but all major ports are hooded and exhaust ventilated to the sanitary baghouse.

Kettle Refining

Ten 29.5 metric ton (65,000 lb) capacity steel kettles are utilized at this smelter. The kettles are located between the two blast furnaces and the reverberatory furnace. Molten metal flows (by gravity) into initial refining kettles from the furnaces. Kettle to kettle transfer of molten metal is accomplished with pumps. Molten lead from the reverberatory furnace is kettle refined using caustic, niter, and phosphorus to a final product of soft or pure lead. Molten lead from blast furnaces is kettle refined with antimony, arsenic, tin, copper, sulphur, and caustic to a final product of hard or antimonial lead.

Each refining kettle can be fitted with three different kinds of hood enclosures. The hoods are moved by overhead crane from kettle to kettle. Each hood is equipped with a connection and flexible duct which can be hooked up to the local exhaust system.

The most simple kettle hood is a low profile dome with an inspection and an exhaust duct port. A second hood that is similar to the first will accommodate a mechanical stirring device and also has an inspection port. A third hood is used in conjunction with the other hoods and encloses the dross or skimming pot buggy which is positioned adjacent to the kettles. This hood has an auxiliary air mover which assists air flow into the general exhaust system. The degree of kettle hooding relaxes as the molten metal cools and proceeds to the final kettles which feed the continuous casting line.

Kettles are constructed so that most of their height is below the furnace and kettle room operating level. Access to kettle firing mechanisms, etc., is accomplished by working from a basement-like level.

Furnace and Kettle Operations

Several areas within the furnace and kettle building are characterized by relatively high noise levels. Noise in these areas is primarily the result of the firing mechanisms being used. Without sound level measuring equipment it is not possible to estimate whether hearing protection devices should be worn and a hearing conservation program implemented.

During the hot summer weather, heat in this building could be a problem to the empoyees performing strenuous work. The building has several large openings which allow indraft of fresh air and two axial exhaust fans located near the ceiling significantly help removal of hot air. These fans are rated at approximately 23.6 m^3/s (50,000 cfm) each. In addition to removing heat,

these fans also provide dilution ventilation which assists contaminant control.

Ingot Casting

Ingots weighing 29.5 kg (65 lb) are cast in a continuous casting line which uses water to cool the ingot molds. Molten lead is pumped from the final two holding kettles (one for soft lead and one for hard lead) into the lead well of the casting machine. The lead pouring position on this machine is partially enclosed and connected to the furnace/kettle building's local exhaust system. This casting line is located at the firing end of the reverberating furnace and, therefore, noise levels are elevated.

One employee skims the surface of molten lead after it is poured into the molds. A team of two to three employees palletize and move the finished ingots to storage with the assistance of a small pendent operated hoist.

Product Storage

Palletized ingots are stored in covered open-air storage sheds or in open places near baghouses. Forklift trucks are used to maneuver pallets of ingots. Slag from furnaces is also stored under the open air sheds and is handled by a front-end loader.

U-Tube Cooler and Baghouse

There are two baghouses in use at this smelter. The metallurgical baghouse has a capacity of approximately 21.2 m^3/s (45,000 cfm). Flue gas passes from the waste heat afterburner to the U-tube coolers, through a large radian fan and into the baghouse. The metallurgical baghouse operates at a temperature slightly over 149°C (300°F). This baghouse is cleaned by using reverse air flow which is accomplished by dampering into a line that is connected to the suction side of the fan which feeds the baghouse.

The sanitary baghouse serving the smelter's local exhaust ventilation system has an approximate capacity of 23.5 Nm^3/s (60,000 cfm). Air passes through this baghouse to the ambient environment. Both baghouses deposit dust into screw conveyors that transfer the dust to a bucket elevator which is fed to other conveying equipment. Dust from both baghouses is transferred via these means back to the reverberatory furnace for further smelting.

Flue Gas Scrubber

After flue gases have passed through the flue gas baghouse, they continue through a venturi scrubber and then into the ambient environment. The scrubber uses a solution of soda ash and lime

slurry to remove oxides of sulfur from the effluent air stream. Soda ash is received in bags. The lime is received in bulk and is first slaked and then dumped into a tank which holds the scrubbing solution.

Projected Smelter Modifications

This smelter is currently under an abatement plan with OSHA. The final abatement date may be reached before the promulgation of a new lead standard. Smelter modification plans are somewhat dependent upon the degree of control which will be required. However, the following modifications are being considered:

1) Add a new baghouse with sufficient capacity to serve local exhaust systems for a variety of relatively small emission sources; and relieve some of the load on the existing systems.

2) Replace front-end loader materials handling with enclosed conveying systems.

PRELIMINARY SITE VISIT

SMELTER 1800

(A Secondary Aluminum Smelter)

SUMMARY

Smelter 1800 is a secondary aluminum smelter located in Illinois. Most of this plant's products are aluminum alloys. They produce ingots and molten metal for shipment to customers.

This smelter consists of five major processing areas: scrap receiving, shredding, drying, and storage; aluminum reverberatory smelting/refining/alloying; ingot casting; product storage; and pollution control. In addition, they have a hot metal operation for shipping molten aluminum. The air pollution control scheme relies primarily on furnace hooding that is ducted to a baghouse for gas and particulate control. An afterburner is used on the vent stream from the thermal dryer to eliminate combustible particulates and gases. These gases then exit through a stack. In addition, this plant uses a caustic scrubber to remove acid fumes produced in the chlorine demagging aluminum operation. These measures appear to be effective and the stacks are clear.

General ventilation for the furnace room is provided by open doors, side vents with fans, and roof vents with fans. Portable fans are used to provide local ventilation for areas where heat or gas might be a problem. General ventilation was good and no excessive exposure to heat was observed.

GENERAL

The major raw material used at this smelter is aluminum. From this, a variety of aluminum alloys are produced through the use of a reverberatory furnace, and the process is a combination of scrap blending and fluxing. Most of the scrap is brought in by rail, weighed, and separated. The larger pieces of aluminum scrap are sent to a hammermill for shredding and any iron present is magnetically removed. Boring type scrap, which is usually oily, is crushed to a uniform size and dried prior to smelting.

This plant uses the Durham process to chlorinate the aluminum and remove magnesium. Basically, the Durham process utilizes a furnace-like chamber outside the main furnace into which the molten aluminum is pumped. The chlorine gas is bubbled into the metal within this chamber and removes magnesium. The demagged aluminum then flows back into the main furnace. The gaseous effluent, if any, from the Durham chamber is scrubbed with

caustic to remove acid fumes. Once the desired metal composition has been obtained, the aluminum is either poured into ingots and allowed to harden or poured into an insulated transfer ladle for delivery to customers in the molten state.

- o Processes
  - 4 aluminum reverberatory smelting furnaces utilizing Durham process
- o Capacity
  - Approximately 900 metric tons (2,000 tons) aluminum/month
- o Employment
  - Approximately 145 production workers
- o Raw Materials
  - Aluminum scrap (all kinds)
  - Chlorine gas
  - Caustic soda
- o Products
  - Aluminum alloy ingots
  - Aluminum alloy hot metal

ENGINEERING CONTROLS

Engineering controls used to limit hazardous exposure include:

- o the reverberatory furnace charging well hood,
- o the Durham process for aluminum demagging
- o the afterburner on the thermal dryer, and
- o general plant ventilation.

The primary hooding on the charging well of the reverberatory furnaces eliminates gaseous and particulate emissions from this part of the process. The emissions collected by the hoods are sent to a baghouse which is seeded to neutralize acid fumes which may be present in the discharge. This combination of hooding followed by a baghouse appears to be effective as both the furnace room and stack were clear of any significant particulate emissions.

This plant uses the Durham process for demagging of the aluminum with chlorine gas. This process minimizes exposure to chlorine by containing it within a closed chamber into which the aluminum is pumped. The demagged aluminum is then gravity-fed back to the main furnace. The molten aluminum flows to the casting line. The gaseous discharge from this process is sent to a low energy scrubber where the acid fumes are scrubbed with caustic soda.

A thermal drum-type dryer is used to dry oily borings before they are charged to the furnace. This dryer operates at approximately 200°C (400°F). The dried borings are magnetically screened to remove any iron present and is then stored until needed. The discharge from the dryer is sent to an afterburner. The afterburner operates at approximately 870°C (1,600°F) and controls the

combustible particulates and gases. It appears to be effective for reducing particulate emissions since the stack is clear.

General ventilation for the furnace is provided by roof and side vents with fans. No excessive heat or noise levels were observed and the visibility was good.

INDUSTRIAL HYGIENE

Measurements

This smelter does not engage in routine air monitoring for the chemical agents found in the workplace. In the past, their insurance carrier has performed limited monitoring for lead in air.

Personal Protective Equipment and Hygiene

Respiratory Protection--
Respirators are worn by employees when changing bags in the baghouse dust collection system. In addition, chlorine is used in the aluminum alloy recovery process which requires the changing in and out of 900 kg (2,000 lb) chlorine cylinders. During this operation, employees wear a self-contained breathing apparatus. These self-contained units are used daily. The air tanks are refilled at the plant from cylinders of breathing air purchased from an outside vendor. The extent to which employees are trained and monitored in the use of these rather complicated breathing protection devices could not be ascertained.

Other Personal Protective Equipment--
Equipment is worn throughout the smelting operations. In general, safety glasses with side shields, safety toe shoes, and hard hats are required in most operating areas. In metal pouring areas, employees are required to wear safety toe shoes with metatarsal protectors and leggings when pouring hot metal. Employees in the hot metal areas also wear heat resistant gloves with a furnace cuff. Additional protective equipment such as aprons, face shields, heat resistant clothing, etc., is worn in various areas of the plant. The company does not provide clean work clothing to employees nor does it provide for the laundering of their work clothing.

Lockers, Showers, and Changeroom Facilities--
A clean, heated locker room facility is provided for production workers. This facility has adjacent showering, hand washing, and toilet areas. Employees are encouraged to shower before leaving the work premises.

Employee Medical Program--
Presently pre-employment physical examinations are provided by this plant. An annual physical examination program is being developed.

OBSERVATIONS

Raw Materials Receiving

- Scrap aluminum materials are received by rail and truck delivery. These materials are unloaded in the receiving warehouse where they are segregated in bins.
- An overhead crane is utilized to move quantities of scrap from bin to bin and from the receiving warehouse area to the scrap preparation processes.
- Sections of used boiler shells are used as crane gondolas to handle the various scrap materials.
- Large aluminum sow ingots weighing from 225 to 550 kg (500-1,000 lbs) are received from scrap dealers and handled either by crane or forklift.
- Metallic silicon received in bulk form is also stored in bins in the receiving warehouse.

Scrap Crushing and Cleaning

- Scrap aluminum is fed through a large hammermill which is enclosed and isolated in the center of the main production building of the plant. All types of scrap aluminum pieces are fed through the hammermill and emerge broken into small pieces that can be charged to furnaces.
- The scrap grinding or crushing process was a significant source of noise in the workplace; this has been neutralized by an enclosed structure.
- The hammermill is equipped with ventilation which is vented through a cyclone dust collector and the air stream released to the ambient environment. The cyclone dust collector is located outside the plant operating area.
- After crushing, the scrap pieces are run through a magnetic separator to remove the metallic iron. The scrap is then deposited into dumpster-like hoppers which are used to charge the furnaces.
- The scrap crushing hammermill is driven by a 373 kw (500 horsepower) electric motor.
- Aluminum borings containing approximately 20 percent moisture must be crushed and dried before they can be added to the alloy recovery process.
- This plant has two gas-fired boring drying units. Both are equipped with afterburners to complete the combustion of carbonaceous materials that are driven off the boring materials during drying. Borings are received in bulk quantity and deposited in tote boxes. The tote boxes (containing the borings) are emptied onto a conveyor. The borings are

then fed to a hammermill that crushes the borings. No dust control is necessary due to the moisture content (15-20 percent oil) of the borings.

- After crushing, the borings are deposited into tote boxes that transferr to conveyors feeding the boring dryers.
- Two rotary dryers are used to dry the crushed boring materials. One of the rotary dryers is located outside the main smelting building, while the other is located inside. These dryers operate at approximately 400°F with a minimum of excess oxygen and airflow to minimize the formation of aluminum oxide. The effluent air from the dryers passes through an afterburner which is operated at approximately 870°C (1,600°F).
- The dried boring materials are magnetically screened and again returned to tote boxes for charging into the melting furnaces.

Aluminum Alloy Recovery Furnaces

- This smelter has five aluminum recovery reverberatory furnaces ranging in capacity from 16 to 23 metric tons (35-50 tons). These furnaces have external charging wells which are hooded with effluent exhaust air processed through a baghouse before being released to the ambient environment.
- The charging well for each furnace is equipped with an overhead canopy hood. The air captured by the charging well or hearth hood is ducted through a seeded baghouse and the air is released to the ambient environment. Chlorides and grease from the charging of materials can cause significant problems in this type of baghouse operation. Seeding and coating of bags avoid these problems.
- Scrap and silicon are added to the charging well by dumping a tote box or dumpster bin into the charging well and allowing the materials to submerge in molten aluminum.
- The main effluent stream from each reverberatory furnace is also ducted away to a baghouse located outside the plant, and following baghouse treatment, effluent air is released to the ambient environment.
- This plant uses the Durham process to remove impurities (primarily magnesium) from the recovered aluminum. Each of the reverberatory furnaces has a Durham chamber at the side of the furnace where chlorine gas is injected under the melt.
- The effluent from the Durham chamber is ducted through a low energy scrubbing system which removes residual chlorine gas, if any, via use of a caustic solution scrubbing medium. Additional scrubbing capacity will be added to insure control under process upset conditions.
- The effluent water from the scrubber goes to a holding pond where the pH is adjusted and the water released to the municipal sewer system.

- Aluminum is pumped from the reverberatory furnace to the Durham chamber using a pneumatic pump. The demagged aluminum is gravity-fed back to the furnace.
- The furnaces are tapped to a continuous casting line which features externally water cooled molds.
- The portions of the casting lines where ingots are cooled by water are hooded to draw off steam.
- Ingots are hand-unloaded from the casting line and loaded onto pallets so that products can be moved to the shipping warehouse via forklift truck.
- Slag from the reverberatory recovery furnace is removed at the charging well using long, hoe-shaped tools.

Chlorine Receipt and Storage

- Chlorine gas is received in 900 kg (2,000 lb) cylinders. Six 2,000 lb cylinders are manifolded together in a small building for routine use.
- The cylinders are weighed initially and their chlorine reserve monitored through use of scales. As stated earlier, employees who hook up new tanks and unhook empty tanks utilize a self-contained breathing apparatus during these operations.
- From the cylinders, the chlorine gas passes through a vaporizing unit and then on to the Durham chambers at the side of each reverberatory furnace. Several emergency shut-off valves are available within the chlorine handling system. The chlorine can be shut off at the furnace, the manifold, and at least one location in between. Remotely located switches can close an electric solenoid valve in an emergency to stop all flow of chlorine from source station.

Baghouse Dust Collection System

- A positive pressure baghouse system for the aluminum alloy furnaces is used at this plant. The exhuast system is dampered so that it can be used with those furnaces that are in operation during a particular day.
- Bags must be pretreated to do an effective job of collecting emissions from the aluminum recovery process. The bags are shaken each day and the particulate is disposed of in a landfill.

Miscellaneous

- Fluoride fluxes are used sparingly at this smelter.
- Municipal water is used and then cleaned for discharge into the municipal sewer system.
- All refractory repairs at this smelter are performed using cements, etc., which do not contain asbestos.

PRELIMINARY SITE VISIT

SMELTER 1825

(Secondary Aluminum Smelter)

SUMMARY

This is a small secondary aluminum smelter that produces aluminum ingots with some lead ingots by using sweating sheathed cables. The smelting operation is a small part of the total plant operation which handles primarily ferrous and nonferrous scrap. This facility consists of five areas: scrap receiving, sorting, and storage; aluminum reverberatory smelting; sweating and insulated wire burning; ingot (or sow) casting; and product storage. Figure 4 shows the general layout of this smelter.

The air pollution control scheme used at this smelter relies primarily on furnace hooding that is ducted through afterburners for control of combustible gases and particulates. The effluent gas streams from these afterburners are vented to the atmosphere through stacks.

The furnace operations are not enclosed in a building. They do have a shed-type roof over them but ventilation around the furnace is excellent. No excessive exposure to noise, heat, or fugitive emissions was observed.

GENERAL

A reverberatory smelting furnace is used to melt down aluminum scrap and cast it into aluminum sows. They do no refining or alloying at this smelter. The aluminum scrap (new and old) is received primarily by truck, sorted, and stored in separate areas. The finished aluminum product from the reverberatory smelting furnace is in the form of sows.

This smelter also operates an incineration furnace. Two basic operations are carried out in this furnace: insulated wire burning and lead sweating. Insulated wire of all types is stacked on wooden pallets and charged into the furnace. The insulating material is burned off and the metal wire recovered. The gases and particulates are sent through an afterburner for control of the smoke. The second use of the incinerator involves the sweating of scrap such as lead sheathed copper cables. The lead coating is sweated off and recovered in the form of ingots. This allows the sweated lead product and the remaining wire to be sold at higher prices. Other types of scrap which are sweated

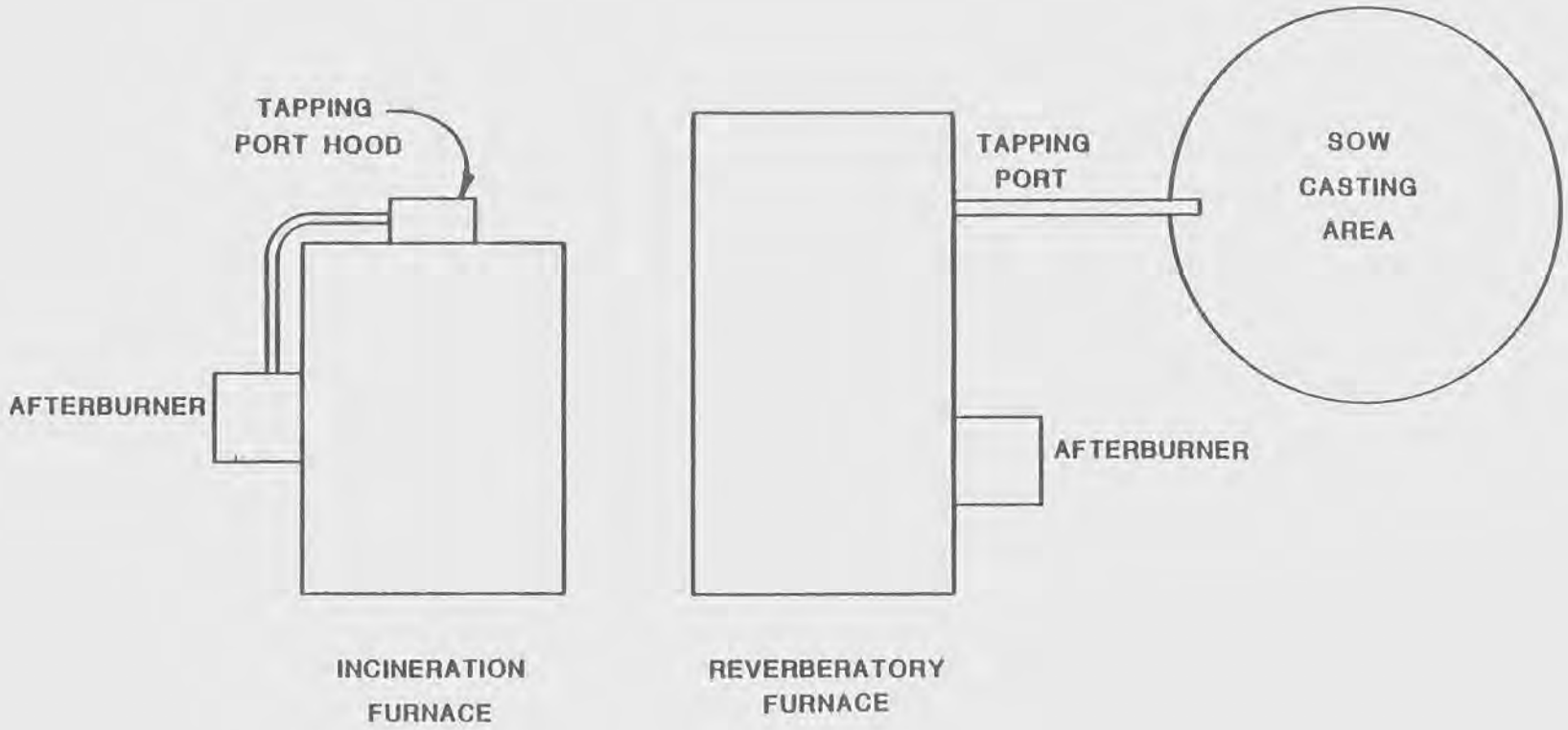

Figure 4. General layout of Smelter 1825.

include bearings, to recover the babbit alloy from the brass case, and automotive radiators to recover solder alloys.

- o Processes
  - 1 reverberatory aluminum smelting furnace
  - 1 incineration furnace for wire insulation burning and sweating
- o Capacity
  - 300 kg/hr (675 lb/hr) aluminum typically
  - 360 kg/hr (800 lb/hr) lead typically
- o Employment
  - 1 1/2 men/day for furnace operation
- o Age
  - Approximately 10 years old
- o Raw Materials
  - All types of aluminum scrap (irony aluminum)
  - All types of lead scrap (including babbit alloys)
- o Products
  - Aluminum sows
  - Lead and lead alloy ingots

ENGINEERING CONTROLS

Engineering controls used to limit hazardous exposure include:

- o the hoods and afterburners on both furnaces,
- o the hood over the tapping port of the incineration furnace, and
- o the general ventilation around the furnaces.

The hood over the charging well of the aluminum reverberatory furnace is ducted to the afterburner along with the combustion chamber flue. The afterburner controls any combustible gases and particulates present in this stream. The effluent from the afterburner is vented directly to the atmosphere.

The incineration furnace flue gas is fed directly to an afterburner, once again to control combustible gases and particulates. The primary use of the afterburner is to control smoke produced during insulation burning. The afterburner appears to be effective since no visible emissions exit the stack.

The hood over the tapping port of the incinerator is ducted to the afterburner. The primary use of this hood is to draw lead fumes away from the employees working in the lead casting area.

General ventilation around the furnaces is excellent. There is no building to allow a buildup of fumes or gases. In addition, no excessive exposure to heat or noise was observed.

INDUSTRIAL HYGIENE

Measurements

This smelter does not engage in routine air monitoring for the chemical agents found in the workplace.

Personal Protective Equipment and Hygiene

Respiratory protection is not required in any of the furnace area, although respirators are worn sometimes.

Other personal protective equipment is worn in the furnace area. In general, hard hats and safety shoes are required. In addition, protective clothing and face shields are worn by employees while pouring metal.

Employee Medical Program

There is no medical program.

OBSERVATIONS

Raw Materials Receiving

- Scrap material of all types is received by truck, sorted, and stored in separate areas.
- New aluminum scrap is generally not melted but is sold as is.
- The scrap is moved using forklifts.

Incineration Furnace

- Insulated wire, primarily copper, is charged to this furnace to burn off the incineration.
- The wire is stacked on wooden pallets and placed into the furnace by using a forklift.
- Once the insulation on the wire has started burning, the firing rate on the furnace can be cut back.
- The smoke produced by the wire burning operation is consumed in an afterburner.
- This furnace is also used to sweat scrap containing lead or lead alloys. This scrap includes lead sheathed cable and bearing. The lead is sweated and recovered in ingot form while the higher melting scrap is removed and sold.
- The tapping port on this furnace is hooded and ducted to the afterburner.
- The afterburner firing rate is maintained at 1.25 million Btu/hr rather than maintaining a certain temperature.
- The afterburner appears effective since the stack has no visible effluent from it.

- Both the incinerator and associated afterburner are natural gas fired.

Aluminum Reverberatory Furnace

- Aluminum scrap of all types is charged to the reverberatory furnace by forklift.
- The aluminum is melted down and poured into large molds to produce sows.
- The hoods over the charging well and the combustion chamber flue are ducted to an afterburner for control of combustible gases and particulates.
- The furnace and afterburner are natural gas fired.
- The firing rate rather than the temperature is controlled in the afterburner.

Casting of Sows

- The product from the aluminum reverberatory furnace is poured into large sow molds
- The molds are arranged in a circular shape and are on carts which allow them to be moved.
- The molds are allowed to air cool and the solidified sows are removed by crane.
- This operation was not observed during this visit; therefore, no comments regarding hazards can be made.

Product Storage

- The ingots produced by the lead sweating operation, the sows produced by the aluminum reverberatory furnace, and the higher melting scrap from the sweating operation are all stored outside with other scrap until sold.
- Most of the products from this smelter are shipped out by truck.

Laboratory Facilities

- This smelter has no facilities for analysis of its metal products. Samples are taken and sent out for analysis.

PRELIMINARY SITE VISIT

SMELTERS 2140 AND 2090

(Secondary Lead Smelters)

SUMMARY

Both Smelter 2140 and 2090 have the same basic control strategy for limiting worker exposure to inorganic lead compounds and other hazards. The major emphasis in each plant is to use engineering controls to control fugitive emissions at the source where possible. Local hooding/ventilation/baghouse systems are the most common types of controls used. Housekeeping is performed using both manual and mechancial sweeping. A respirator program is used to guarantee the protection of each worker in areas where engineering controls are not able to limit worker exposure. A comprehensive medical monitoring program completes the control strategy for both plants.

One interesting control observed at each smelter was the enclosure/ventilation of the blast furnaces. The blast furnace is enclosed above the first level of structural steel surrounding it. By pulling a draft at the charging floor level, most of the fugitive dust and fume escaping the furnace can be collected and sent to a baghouse before it escapes into the workroom. Essentially, the entire blast furnace is then hooded. General ventilation is good in all areas of both plants. It is used mainly to remove heat generated by the processes. Where mechanical ventilation is needed, fresh air is drawn from the outside and forced into the smelter buildings. It is the general opinion at both smelters that roof monitor fans or general exhaust ventilation are not useful controls for secondary lead smelters. Such ventilation does not effectively disperse heavy lead or lead oxide dust and fumes. As a result, these hazardous materials simply settle in the smelter yard and create a fugitive dust problem. It is felt that collecting and containing fugitive lead emissions at the source is the only effective engineering control for secondary lead smelters.

GENERAL

Smelter 2140 uses a single blast furnace with a lead production capacity of approximately 45.5 metric tons per day (50 tons/day). This smelter consists of seven areas: battery receiving/decasing/sorting; battery manufacture scrap storage; smelter building and baghouse; oxide building; solder production, casting, and product storage; battery casing storage; and office/warehouse. The major products are solder, lead oxide, and lead

pigs. This smelter produces hard (antimonial) lead, solder, and lead oxide from two major raw materials: used batteries and battery manufacturing scrap. Battery manufacture scrap is generated from four major sources: lead oxide drosses, excess dry lead oxide from battery plate coating; battery mud (excess oxide); and sweepings. This type of scrap is purchased, smelted, and resold to battery manufacturers in the form of lead pigs or ingots.

Used batteries are received by truck and unloaded manually using portable rollers. Two mechanical choppers are used to remove the battery tops. The tops then fall into a bin where a front-end loader can transport them to a crusher/separator which separates the lead from the plastic or rubber casing head.

The battery plates are dumped out of the battery casing and fall into another bin. The plates are transported by front-end loader to storage bins near the blast furnace. Discarded battery cases are washed and piled in storage areas.

Battery manufacture scrap is stored in the smelter yard in steel drums. There is also a ventilated dry dross storage bin near the blast furnace.

The smelter building houses the blast furnace, 7 kettles used for alloying and casting, and 2 casting machines. The building is open on one side and has two fans in a sidewall for general ventilation. Two other large fans are located higher in the building but have been disconnected. Several floor fans were placed around the smelter building for local cooling.

The blast furnace is charged by using a skip hoist. Battery plates, battery manufacture scrap, baghouse dust, scrap iron, coke, silica, and lime are charged in alternate loads to the top of the blast furnace. The furnace off-gases are ducted to a metallurgical baghouse. The bags are manually shaken and the dust is stored in an enclosed bin which is vented to a small baghouse.

The kettles are equipped with removable hoods and are vented to yet another baghouse. Molten lead is pumped from the blast furnace lead well to an alloying kettle, then to a casting kettle, and is finally cast into pigs or slugs. Pigs are normally sold to battery manufacturers. Slugs are not finished products and are remelted when needed.

The oxide plant uses the Barton process to produce lead oxide. This part of the plant was relatively new compared to the rest of the smelter and was exceptionally clean. It is a totally enclosed process but due to its proprietary nature, the smelter representatives declined to release any further process information.

Solder is produced in an extrusion press. Four kettles producing ingot lead and ingot solder are located in the same area of the smelter. These four kettles will be hooded and vented to a baghouse in the future under the abatement plan submitted by Smelter 2140 to OSHA.

The remainder of the smelter is used for administrative or storage purposes. Nearly the entire plant is paved and pitched for good drainage to a collection pond. Only a small storage area is not paved.

Smelter 2090 uses two blast furnaces and one reverberatory furnace with a total capacity of approximately 115 metric tons of lead per day. The smelter has many small operations in addition to the three main furnaces. In order to simplify the description of these small operations, the smelter is divided into nine areas: battery receiving/storage; battery decasing; smelter building baghouses, castings, and storage; oxide building; mixed metal and solder building; dross processing; cable sweating; shops and yard; and engineering, laboratory, and office buildings. The major products are lead pigs, solder, specification alloys, and lead oxide. This smelter has all of the processes described for Smelter 2140. A description of both the important differences and the additional processes will be presented here.

This smelter has a large battery storage yard. Batteries are transported to one of two saws where the battery tops are removed. The saws create a noise problem. A similar problem was solved by installing choppers in Smelter 2140. The remainder of the battery decasing operation is similar to Smelter 2140 but on a larger scale.

The 2 blast furnaces, 3 alloying kettles, and 2 casting kettles were operated and ventilated in nearly the same fashion as Smelter 2140. However, Smelter 2090 operates a reverberatory furnace to produce soft lead. The reverberatory furnace has a ram charging device which is fed by front-end loader. The off-gas enters a brick flue, a settling chamber, a cyclone, then a balloon flue before entering a baghouse. The blast furnaces both have afterburners unlike the furnace at Smelter 2140.

Two kettles are used along with the reverberatory furnace in the soft lead operation. These are both hooded and ventilated to a small baghouse. Yet another baghouse near the reverberatory furnace services the reverberatory furnace lead and slag taps and the ram feeder. The south blast furnace slag tap and lead well are hooded and vented to a small baghouse. The north blast furnace skip hoist enclosure and lead well are also hooded and vented to a small baghouse. The north blast furnace slag tap is vented to a separate small baghouse.

The oxide plant in Smelter 2090 also uses the Barton process. The process is totally enclosed, very modern, and quite clean. Again, process information on this part of the smelter is considered proprietary.

The mixed metal and solder building houses six small kettles. Various alloys are produced in these kettles including solder. There are also several manufacturing operations in this building. Came lead and wire solder are the major products.

The dross processing area contains two rotary dross furnaces and four kettles and a casting machine. Drosses with high tin content are processed to recover the tin for use in solder production. Two small baghouses service the four kettles and rotary furnaces.

The cable sweating area contains three sweating furnaces. Cable is chopped into strips, loaded on steel racks, and placed in the furnaces. The lead is sweated from the cable and the remaining copper is removed and sold to a secondary copper smelter. The furnace gases are ducted to a settling/cooling chamber and then to a baghouse.

The remainder of the smelter grounds is used for storage and auxiliary services, e.g., shops, laboratories, offices, etc. Most of the office workers have been moved out of the smelting area into one of two office buildings. This has eliminated many potential exposure problems.

	Smelter 2140	Smelter 2090
o Smelter startup date	1939	1933
o Capacity (m*tons/day)	45.5	115
o Employment		
- Production	78	166
- Supervisors	10	17
- Maintenance	12	25
- Office	9	26
o Raw Materials		
- Batteries (whole)		
- Battery manufacture scrap		
- Scrap iron		
- Coke		
- Limerock		
- Tin		
- Cable (2090 only)		
o Products		
- Antimonial lead for battery plates		
- Solder		
- Soft lead (2090 only)		
- Specification alloys		
- Came lead (2090 only)		

ENGINEERING CONTROLS

At both smelters general ventilation is used to dissipate process heat generated by the furnaces and kettles. Loca.. hooding, ventilation, and collection in baghouses are the most common control methods used to minimize lead exposure. Isolation processes and enclosure are also used to a limited extent to minimize exposure to inorganic lead. However, since both smelters are rather old, the smelter layouts were not designed to isolate areas of high exposure from those with low or no potential lead exposure. As a result, the isolation process which has been done has been neither complete nor totally effective.

The ventilation systems of both smelters consist of a number of local hoods, ducts, fans, and baghouses. Figures 5 and 6 are schematic diagrams of the two systems. The blast furnace and reverberatory furnace gases are treated in metallurgical baghouses.

Bases from other local collection points are cleaned in a number of small sanitary baghouses. In most cases, the sanitary baghouses were retrofitted to existing processes as the standards for lead exposure became more stringent. As a result, there are small baghouses scattered throughout the smelter.

This type of system is not as desirable as a system using only one large baghouse for a number of reasons. First, the dust collected in each baghouse must be transported back to the furnaces. Each baghouse then becomes a potential source of fugitive dust. Second, a number of small baghouses require more maintenance, i.e., more potential exposure to lead dust than a single large baghouse. Finally, the cost of installing a number of small baghouses and associated fans would be higher than that for one baghouse system.

Unfortunately, most older secondary lead smelters are similar to Smelters 2140 and 2090 in that they were not constructed with the current OSHA regulations in mind. Ventilating systems are usually retrofitted when needed. The ventilation systems are not usually designed to effectively control major process upsets and they are of little use when furnace maintenance is required. Because of these factors, local hooding and ventilation alone is not completely effective in minimizing exposure to inorganic lead. Process isolation and/or enclosure is required in addition to local ventilation to control exposure. Even then, certain jobs such as furnace tapping, furnace charging, and maintenance will always require personal protective equipment to meet the current regulations.

Process isolation or enclosure may not always be feasible, especially for smelters with layouts similar to those of Smelters 2140 and 2090. Manufacturing operations, shops, offices,

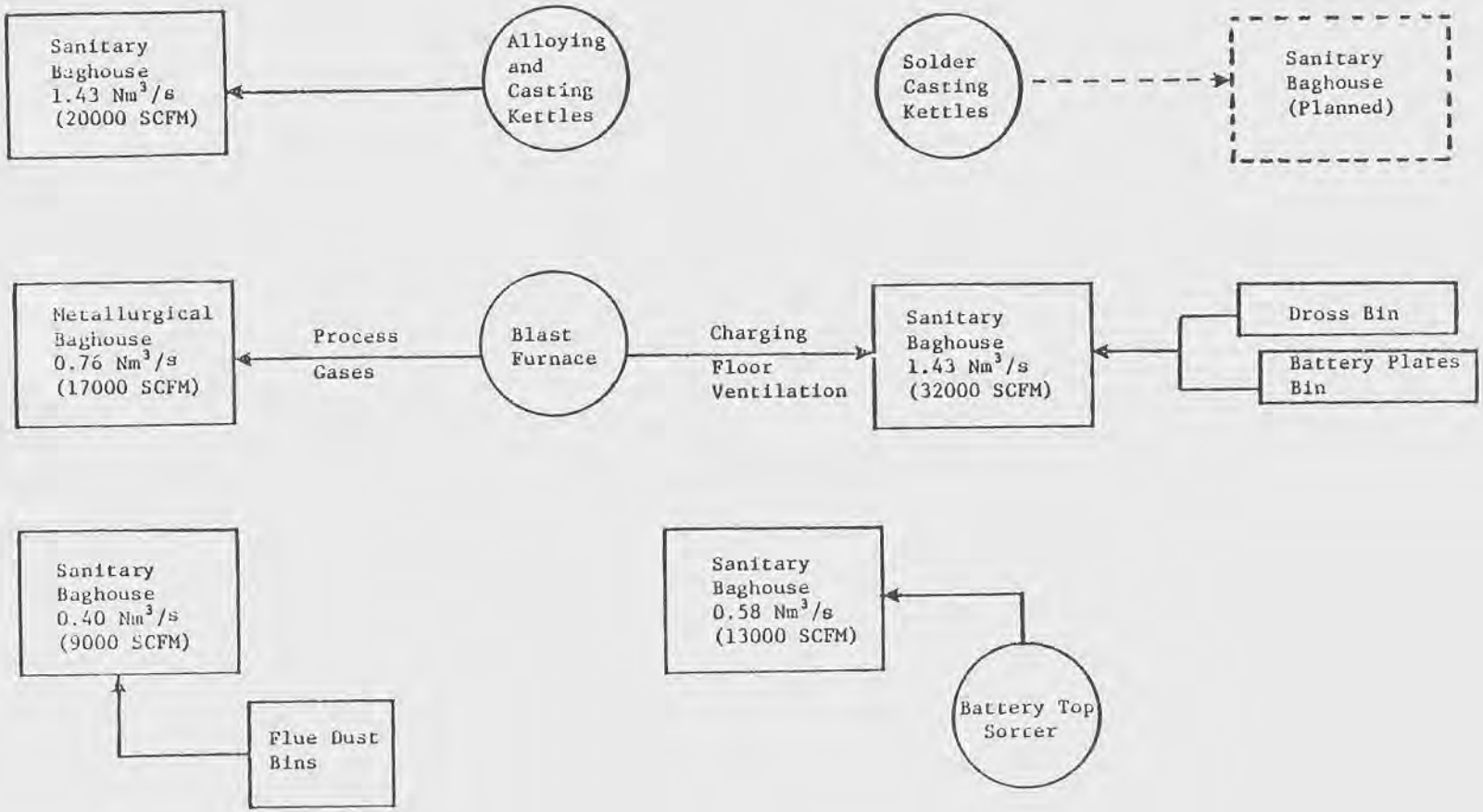

Figure 5. Ventilation system for Smelter 2140.

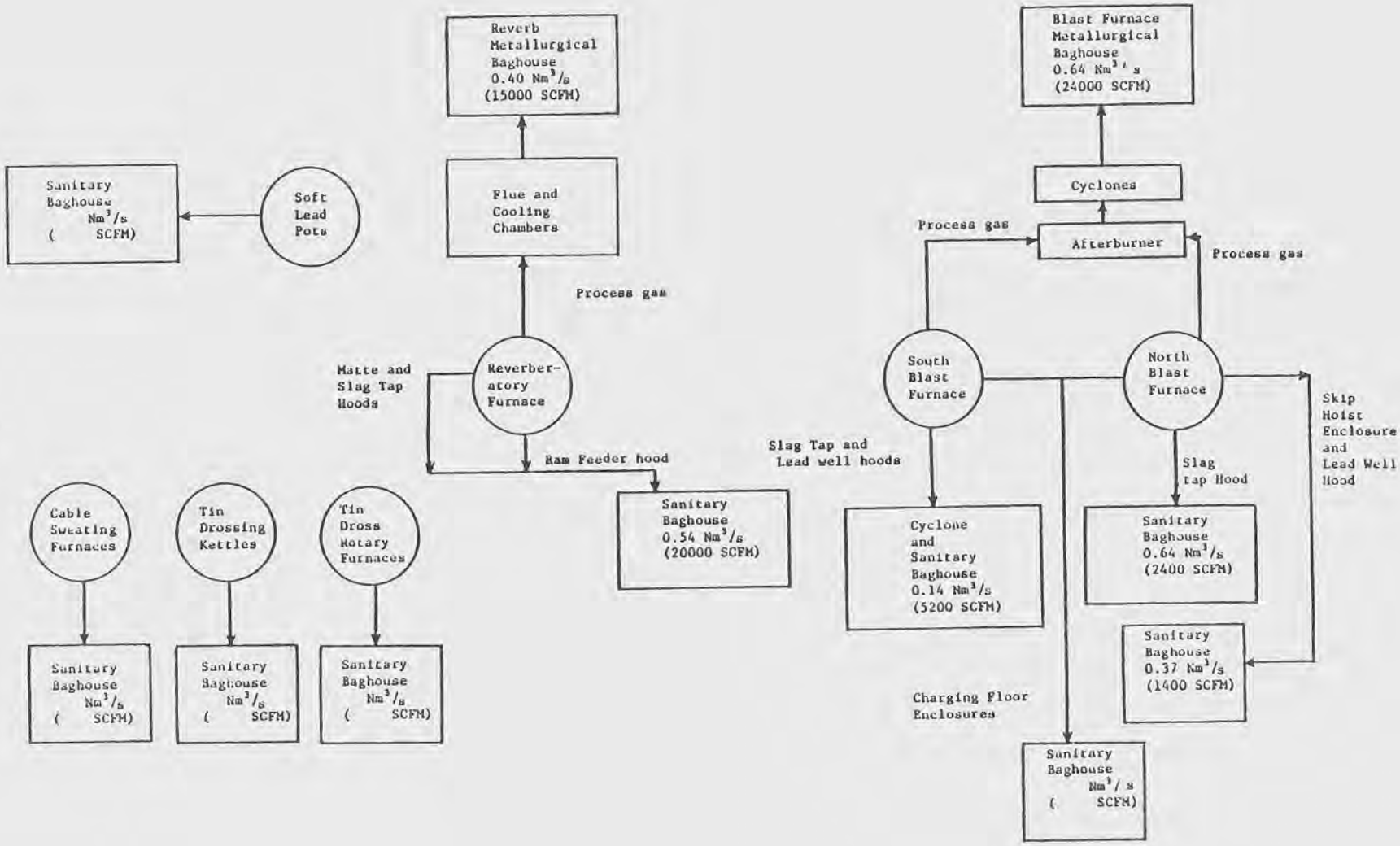

Figure 6. Ventilation system for Smelter 2090.

warehouses, etc., should not be located near the smelting operations. Obviously, it is not possible to reconstruct all of the older smelters. As a result, respirators will continue to be needed in areas of some smelters where exposure to lead is caused by nearby smelting operations. For lead smelters constructed in the future, however, process isolation is a feasible engineering control.

Most of the engineerig controls observed at both Smelters 2140 and 2090 were applications of basic industrial ventilation principles: local hooding, fans, ductwork, baghouse, and stack. One particularly interesting application was the enclosure and ventilation of the entire blast furnace. Figure 7 shows this system schematically. If the sheet metal enclosure is tightly constructed and the sanitary ventilation is adequate, workroom lead concentrations due to leaks and fumes from the blast furnace can be greatly reduced. The cost of such a control, however, may be excessive.

INDUSTRIAL HYGIENE AND MEDICAL MONITORING

The representative of Smelters 2140 and 2090 provided a copy of both the Smelter 2140 "Plant Respirator Program" and "Health Maintenance of Workers Exposed to Inorganic Lead." The latter was prepared by Sidney Lerner, M.D., and copies have been given to the physicians responsible for monitoring both smelters. Both documents are self-explanatory. Copies are included in Appendix A.

All workers and visitors at both smelters are required to carry respirators. In certain designated areas, all personnel are required to wear respirators. Furnace maintenance workers always wear respirators. Some are supplied with fresh air, some are full-face respirators, some are the standard filter cartridge type. The job requirements dictate the respirator required.

Safety glasses with side shields and safety shoes are required for production and maintenance workers. Shoes are purchased by the workmen but the smelters subsidize the shoe program. Work shoes cannot be worn outside the smelter.

Clean work uniforms are provided and laundered by the smelters. Workers are required to change clothes and shower before leaving either smelter.

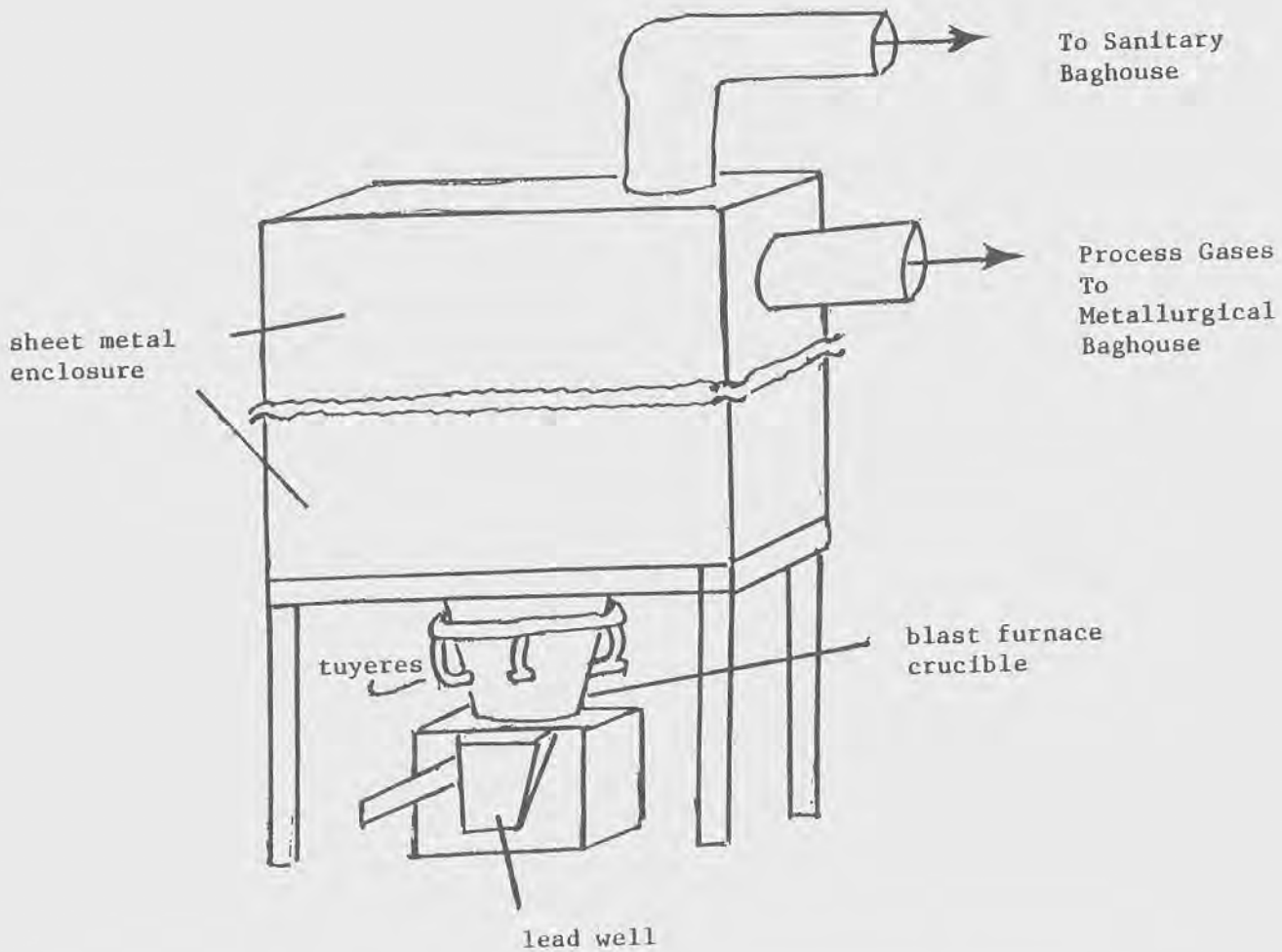

Figure 7. Enclosure of secondary lead blast furnace.

OBSERVATIONS

Smelter 2140

Raw Materials Handling--

- o Battery Receiving/Decasing/Sorting
  - Scrap batteries are unloaded from trucks using portable rollers onto the decasing building loading dock.
  - Two mechanical choppers are used to remove the battery case tops. The plates are dumped out and the cases discarded as described earlier.
  - Workers in this area wear acid resistant shoes and carry respirators.
  - Battery acid is washed from the floor continually with water.
  - Workers operating the choppers wear aprons and face shields.
  - Exposure to H_2SO_4 in this area is possible, but proper use of personal protective equipment should minimize the potential hazard.
  - Adequate safety shower/eyewash facilities were not observed in this area.
  - Lead exposure was not observed to be a problem in this area.
  - The battery choppers have successfully eliminated the noise violation which the battery saws caused.

- o Battery Manufacture Scrap Storage
  - Smelter 2140 had an excess of battery manufacture scrap. However, since the scrap was stored in steel drums outside in the yard, it did not create a hazard. This inventory problem was being corrected.
  - No workers were stationed regularly in this area.

Smelter Building--

- o Most of the potential lead exposure problems are in the smelter building. Smelter 2140 is not currently in compliance with the OSHA lead standard. The engineering controls used at this smelter will probably never reduce all employees' exposure below the 200 ug/m^3 PEL level without supplementary respiratory protection. Certainly, furnace maintenance men will always have to use respirators.
- o The hoods used over the blast furnace slag tap and lead well did not seem to have a large enough capacity to effectively control dust and fume. The hood design was good but additional fan and baghouse capacity was needed.
- o The blast furnace is not equipped with an afterburner. As a result, the dust collected in the metallurgical baghouse is somewhat sticky due to the unburnt organics in it. This makes screw conveying of the dust impossible. Front-end loaders are used to move the dust from the metallurgical

baghouse to a storage bin and then to the blast furnace skip hoist.

- The dust from the small sanitary baghouses is moved in the same way. This constant movement of lead dust creates a general fugitive dust problem.
- It does not appear feasible for Smelter 2140 to install an afterburner, an enclosed dust conveying system, or to consolidate their baghouses into one unit. As a result, respirators will continue to be needed to minimize exposure to lead in nearly all smelter areas.
- Hoods for the casting and holding kettles were constructed in sections and were removable. They were not as effective as the shell type hoods which fit tightly over the kettle and are equipped with tight-fitting charging doors. The shell type kettle hoods require a large hoist or crane to remove them and would require a large capital investment if installed at this smelter.
- Fans for local cooling were placed around the smelter building. Most jobs near the furnaces are intermittent. No excessive heat exposures were observed.
- Ventilation of the blast furnace enclosure seemed effective for normal operation. It was not possible to determine visually whether pulling a greater draft on the charging floor would significantly decrease workroom lead levels. Most of the normal fugitive emissions seemed to be collected by the blast furnace enclosure.
- Workmen in the smelter building wore respirators, helmets, safety glasses, and safety shoes at all times.

Oxide Building--

- This area seemed clean and adequately ventilated.
- Workmen wore respirators, hard hats, and safety glasses and shoes.
- The violations cited by OSHA in this area were probably partially caused by the other smelter operations.
- The totally enclosed Barton processes seemed to effectively minimize exposure to inorganic lead. Respirators would probably not be necessary in this area were it not so close to the smelter building.

Solder Production, Casting, and Storage--

- The kettles in this area were not hooded at present.
- Under the current OSHA abatement plan, these kettles will be hooded and ventilated to a baghouse.
- Workers were equipped with respirators in this area but did not wear them at all times.
- The new hooding should effectively eliminate any potentially hazardous exposures in this area.

General--

- The operators of this smelter will have a difficult time complying with current TLV using engineering controls. Contamination of "clean" areas by baghouse dust movement and smelter upsets will always be a problem. Better management of baghouse dust processing would help minimize the dust problem.
- Tenant® sweepers are used to clean paved areas. These help, but are not the complete solution to dust control.
- The smelter building would have to be completely enclosed and ventilated to avoid contamination of other work areas. This does not seem feasible at this time.

Smelter 2090

Battery Receiving/Decasing/Sorting--

- Scrap batteries and excess battery manufacture scrap are stored in a large unpaved yard along with discarded battery cases. Bulldozers and front-end loaders are used to move material to the decasing area.
- Two saws are used to remove battery case tops.
- The saw operator is potentially exposed to excessive noise levels. He was not observed to be wearing hearing protection but both ear plugs and muffs were available.
- Sorted decased batteries were stored in concrete bins and transported to the smelter using front-end loaders.
- The saw operator may be exposed to excessive levels of H_2SO_4 because the saw generates heat and a spray when the batteries are cut. He was not observed to be wearing a respirator.
- Replacement of the saws with either mechanical or hydraulic choppers could reduce both noise and H_2SO_4 exposure.

Smelter/Baghouses/Casting--

- These operations are located in the same general area within the smelter. The two blast furnaces and associated kettles, baghouses, and casting machines comprise the hard lead production department. The single reverberatory furnace and associated equipment comprise the soft lead plant.
- All workers in these areas wear respirators, safety shoes, and glasses.
- Both blast furnaces and the reverberatory furnace were shut down for maintenance during this visit. Maintenance workers rebuilding the furnaces operated air hammers and were obviously exposed to high lead-in-air levels. However, no engineering controls seemed applicable to lower these exposures.
- Furnace repairmen wore complete helmet type respirators or supplied air breathing apparatus if they were exposed to extremely high lead levels.

- Kettles were equipped with hoods similar to those at Smelter 2140.
- There were separate ventilation systems and baghouses for the reverberatory furnace, blast furnaces, and sanitary hoods. Figure 6 illustrates the ventilation system.
- The hooding and blast furnace enclosures were not observed in operation. However, the smelter building appeared much cleaner than did Smelter 2140, probably due to the recent shutdown/cleanup.

Oxide Building--

- This area seemed clean and adequately ventilated.
- Workmen wore respirators, hard hats, and safety glasses and shoes.
- The violations cited by OSHA in this area were probably partially caused by the other smelter operations.
- The totally enclosed Barton processes seemed to effectively minimize exposure to inorganic lead. Respirators would probably not be necessary in this area were it not so close to the smelter building.

Mixed Metal and Solder Building--

- The workmen in this area wore respirators although it is unlikely that exposure to high lead levels was due to the mixed metal or solder operations.
- Most of the lead-in-air certainly originated in the smelter building located nearby.
- Hooding of the kettles in this area will be completed under the smelter's abatement program.

Dross Processing--

- Workmen in this area wore respirators, safety glasses, helmets, and shoes.
- Hooding and baghouse collection systems controlled emissions from the kettles and rotary dross processing furnaces.
- The area inside the dross processing building was reasonably clean, but even a small breeze would generate enough dust to put the smelter out of compliance.
- Tenant® sweepers were used to help minimize the fugitive dust problem in this and nearly all other smelter areas.
- The tinny drosses are then fed to the rotary furnaces using a vibratory feeder. The rotary furnaces did not seem to be a significant source of lead emissions.

Cable Sweating--

- Three small sweating furnaces were located in the yard under a shed roof. All were ventilated to a single gas cooler and then a baghouse.
- These furnaces were not operating during this visit.

General--

- As in Smelter 2140, it is unlikely that engineering controls alone will bring this smelter into compliance with OSHA regulations. Respiratory protection will be needed in most areas.
- Mechanical dust handling systems in the smelter building make an obvious improvement in the general work area dust levels. Smelter 2090 had less of a fugitive dust problem than did Smelter 2140. Much of this could be attributed to the enclosed, mechanical dust handling system.
- The smelter has a central vacuum cleaning system to facilitate dust collection in areas where the large sweepers cannot be operated.

PRELIMINARY SITE VISIT

SMELTER 2091

(Secondary Lead Smelter)

SUMMARY

Smelter 2091 is a large secondary lead smelter. All of this plant's products are lead-based alloys. The final products are in ingot, pit, or sow form. No fabrication is done at this site. This facility consists of five areas: scrap receiving, crushing, and separating; rotary kiln/blast furnace smelting; pot furnace refining/alloying; product storage; and air, water, and solid pollution control.

The air pollution control scheme used at this plant relies primarily on furnace hooding ducted to baghouses for gas and particulate control. The baghouse dusts collected are recycled to the smelting operation to recover the metal value and minimize the solid waste handling problem. The battery acid is collected, neutralized, and stored until it can be shipped out. The solid waste produced during the separation of battery cases from the plates is disposed of on-site in a landfill. The rotary kiln is located outside and general ventilation is very good. Ventilation of other processes enclosed in buildings was not as good.

GENERAL

For lead-based alloy production, a rotary kiln and a blast furnace are used for smelting to produce antimonial lead. The major raw material for the smelter is scrap automobile batteries. These are processed through a shredder and aqueous separation process which remove the case materials from the metal scrap. This metal scrap is combined with recycled flue dust, coke, and fluxes which are fed by a conveyor belt to the rotary kiln or by skip hoist to the blast furnace.

The actual smelting operation is a combination of scrap blending and fluxing. Fluxes used include soda ash and iron. Once the desired metal composition has been obtained, the lead is poured into ingot molds. These ingots may be sold as is or transported to the kettle furnaces for further refining/alloying. The slag is low in metal content and is disposed in the on-site landfill.

The refining/alloying operation takes place in kettle type furnaces. This operation includes fluxing to remove certain contaminants and adding alloying agents to meet product specifications. These alloys are then cast into ingots and stored until delivery.

- o Processes
  - 1 rotary kiln smelting furnace
  - 1 blast furnace
  - 12 refining kettle furnaces
- o Capacity
- o Employment
  - Approximately 90 production workers
- o Age
  - This plant was started in 1972.
- o Raw Materials
  - Scrap batteries
  - Fluxing agents including caustic soda, soda ash, iron, sulfur, niter, and sawdust.
  - Coke
  - Battery plant scrap
- o Products (in ingot form)
  - Soft lead

ENGINEERING CONTROLS

Engineering controls used to limit hazardous exposure include:

- o the battery crushing/materials separation system,
- o the hoods over the slagging and tapping areas of the rotary kiln furnace,
- o the hoods over the refining/alloying kettles, and
- o the baghouse dust recycling system.

The rotary kiln furnace is provided with hoods and ventilation at the slag and bullion tapping areas. The slag is tapped into kettles and these remain under the hooding system until they have cooled sufficiently to minimize fuming. The lead bullion is tapped using a launder to feed a carousel arrangement (the carousel is partly covered) for large ingot molds. This part of the smelter was not in operation during this visit so no statement concerning effectiveness can be made.

The refining kettle furnaces are equipped with close fitting, removable dome hoods which tap into the sanitary ventilation system. These hoods provide access for the use of agitators where necessary. Since these hoods totally enclose the molten metal, they should adequately control the fumes assuming sufficient draft is maintained. No visible emissions were observed emanating from the covered furnaces.

The baghouse dust recycling system is designed to minimize fugitive emissions by eliminating manual handling of the dust. This system consists of screw conveyors installed in the baghouses and the rotary furnace balloon flue. These screw conveyors transport the collected dusts to the feed house. The dusts are then automatically fed to the rotary kiln along with scrap, coke, and fluxes. In addition to eliminating the problems associated with

dust handling, this system allows maximum recovery of the metal coming into the smelter.

The battery crushing/materials separation system is designed to eliminate manual handling of scrap batteries and components. The mechanized dumping of trailers loaded with scrap, use of front-end loaders to handle whole batteries, charging of whole batteries to the shredder, and automatic conveying of shredded scrap to the materials separation process minimize employee exposure in this section of the smelter.

The basic concept behind the wet battery separation process and kiln with automatic feed system employed at this smelter is to minimize employee exposure by automating and enclosing those operations which handle hazardous materials. The process appears to be capable of meeting this goal. However, at this time, the process is still undergoing start-up problems and construction is still continuing. After the process is running continuously and the backlog of stored scrap and flue dust has been reduced, this smelter may significantly reduce employee exposure.

INDUSTRIAL HYGIENE

Measurements

This smelter is equipped to monitor the workroom and the ambient environment by the use of personal monitors and Hivol samplers. In addition, blood lead measurements are taken at least on a quarterly basis, with the actual frequency being determined by the plant doctor.

Personal Protective Equipment and Hygiene

Respiratory protection is required in most areas of the smelter. In general, half-mask respirators are used. Full-face masks are used in areas of elevated exposure or when a particular employee develops a high blood lead level. Respirators are coded to employees to insure proper face fit. 3-M disposable respirators are used for visitor protection.

A variety of other personal protective equipment is worn in this smelter including safety glasses, safety shoes, hard hats, and protective clothing (all company supplied). In metal pouring areas, employees were also wearing face shields and metallized fabric spats.

Lockers, showers, and changeroom facilities are provided.

Employee Medical Program

Pre-employment physical examinations are required by this smelter. Additional physicals are performed upon the advice of the plant doctor.

OBSERVATIONS

Raw Materials Receiving

Raw materials at this plant are received by truck. The scrap, consisting almost exclusively of batteries, is dumped into an asphalted open yard. A shed is currently being constructed over the storage area.

The truck trailers bearing scrap are emptied using a hydraulic lift which dumps the entire trailer at one time. The scrap is then moved around using articulated front-end loaders.

Battery Crushing/Materials Separation

- Front-end loaders are used to dump whole batteries into the crushing/shredding machine.
- The operators of these front-end loaders are provided with enclosed air-conditioned cabs.
- This machine utilizes hydraulically operated stainless steel knives to cut through the battery cases and reduce the size of the scrap.
- One person works in this area. This employee tends the crushing/shredding machine. This involves manually unplugging the machine at times using a prybar. During this period the employee is exposed to splashed acid and lead dust from the broken batteries.
- The battery acid is collected, neutralized, and stored until it can be trucked out.
- The shredded batteries then travel up an inclined conveyor belt to the top of the materials separation building.
- The materials separation operation consists of a series of rotary washings and specific gravity separation to remove the plastic and rubber battery case material from the metal.
- The battery case material is conveyed outside and piled until it is disposed of in a landfill.
- The metal is fed to a sweating furnace.
- The off-gases from the sweating furnace are sent to a 14.2 m^3/sec (30,000 cfm) baghouse for control of fume and particulates. The dust from this baghouse is sent to the rotary kiln furnace area for recovery of the metal value.
- The active oxides which are removed during the washing operation are recovered by pumping the wash water to a thickener. The sludge effluent from the thickener is then sent to a rotary vacuum filter.

- The filter cake is then sent to a dryer to adjust the moisture content.
- The effluent gases from this dryer are sent to a wet scrubber for control of emissions, both gaseous and particulate.
- This building is not provided with any ventilation other than open doors.

Rotary Kiln Smelting

- The rotary kiln smelting furnace is fed by conveyor belts.
- Sweated scrap from the separation operation is combined with recycle flue dust, coke, and fluxes, such as soda ash and iron, and fed to the top of the furnace.
- The slag produced in this furnace is high in sulfur and is tapped continuously.
- This slag is poured into small ladles, cooled, and disposed of in a landfill.
- The lead product from this furnace is tapped intermittently and poured into molds located on a carousel. The lead bullion is fed to the molds through a launder.
- Maintenance men were changing launders at the time of our visits. These men did not wear respirators.
- The flue gases produced by this furnace are first passed through a balloon flue which serves to cool the gas and allow condensation of the lead oxide. This flue is provided with a screw conveyor to remove the dusts collected.
- The gases from the balloon flue are sent to a 14.2 m^3/sec (30,000 cfm) baghouse. This baghouse is also equipped with a screw conveyor to remove baghouse dust.
- The dusts from both the balloon flue and the baghouse are recycled to the rotary kiln to recover the metal value. This also minimizes handling of the dust.
- The hoods over the slag tapping area and the lead bullion launder are ducted to a 20.8 m^3/sec (44,000 cfm) sanitary baghouse.
- These hoods are designed to have a face velocity of approximately 1 meter/second (200 feet/minute).
- The rotary kiln was not operating during our visit.

Blast Furnace Smelting

- The blast furnace is located adjacent to the refining area. This furnace is presently being refurbished and was not in operation during this visit.
- This furnace has a capacity of 72.7 metric ton (80 ton) of lead bullion per day.
- Enclosed skip hoists are used to charge the furnace.
- The flue gas handling system for this furnace consists of a spark arresting chamber, a cyclone, and a baghouse.
- The baghouse is rated at 14.2 ^{3}/sec (30,000 cfm).

- Engineering controls for the slagging and tapping areas of this furnace were not in place; therefore, no description will be given.

Refining/Alloying

- Refining and alloying of lead bullion produced in the blast furnace and rotary kiln takes place in large kettle furnaces.
- There are twelve 81.8 - 90.9 metric ton (90-100 ton) capacity kettle furnaces in the refining building.
- Six of these are used to produce soft pure lead while six are used to produce hard antimonial lead.
- These furnaces are oil-fired.
- During the refining operation, different agents are added to remove impurities. These agents include sulfur, caustic soda, niter, and sawdust.
- These kettles feed a continuous casting line which is not provided with any hooding.
- The cooled ingots are stacked on pallets and stored until delivery.
- One employee was observed skimming the molds. This worker wore a Whitecap air supplied hard hat in addition to the standard protective equipment such as gloves, aprons, spats, etc.

PRELIMINARY SITE VISIT

SMELTER 2275

(Secondary Zinc Smelter)

SUMMARY

Smelter 2275 is a small secondary zinc alloy plant that produces only zinc alloys, both die-cast and hand-cast alloys. The facility consists of three areas: raw materials receiving and storage; zinc alloying/casting; and product storage. Figure 8 shows the general layout of this smelter.

Due to the low toxicity of the materials handled and the low temperature of the operation, no engineering controls are employed at this smelter. The furnaces are open pot type with no hooding provided. The furnace operation is enclosed in a large building, but overhead garage type doors can be opened to provide added general ventilation, if necessary. No excessive exposure to noise, heat, or fume was observed.

GENERAL

This smelter uses pot furnaces to melt down primary zinc ingots and produce alloys containing aluminum, copper and/or magnesium. The only type of scrap used as a raw material is new scrap which is defined as scrap produced during the manufacture of a finished product. The primary zinc ingots and the alloying agents are melted down and when the desired metal composition has been reached, the alloy ingots are cast using a pump to feed water cooled molds. All the products of this smelter are in ingot form.

- o Processes
  - 4 pot type alloying furnaces
- o Capacity
  - 3630 kg (8,000 lb) per pot
- o Employment
  - 4 production workers/shift
- o Raw Materials
  - Primary zinc ingots
  - New aluminum, copper, and magnesium scrap
- o Products (in ingot form)
  - Die-cast alloys
  - Hand-cast alloys

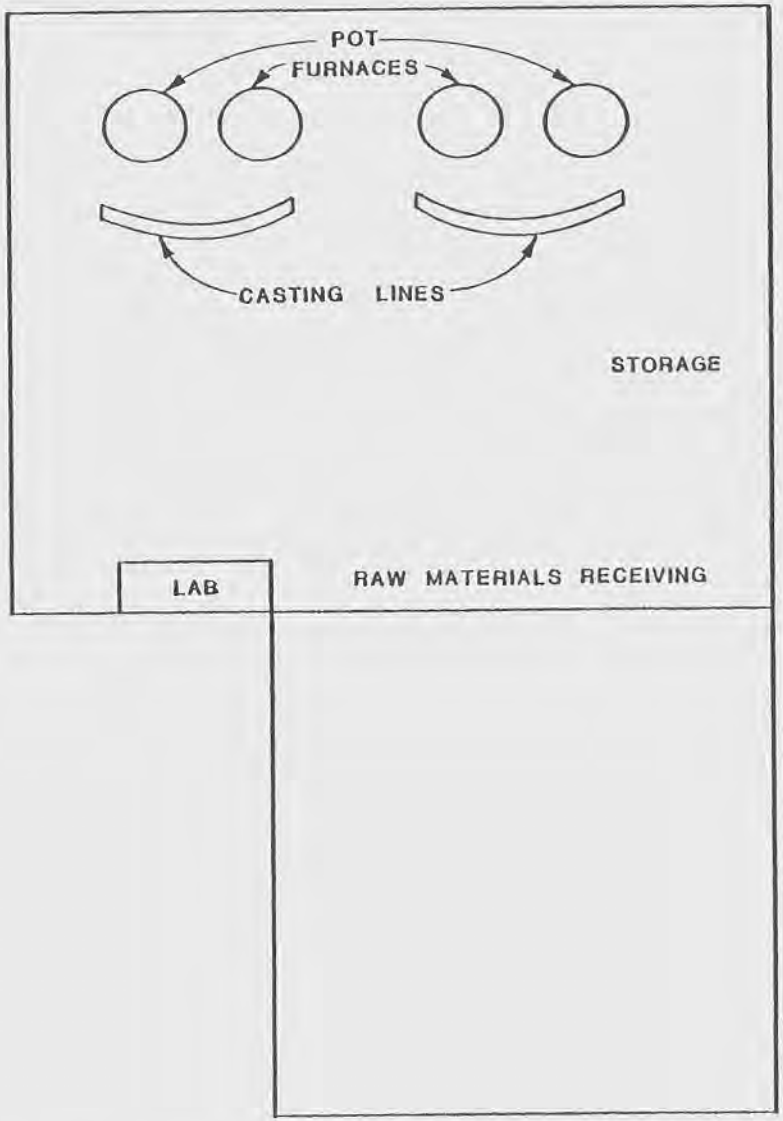

Figure 8. Layout of Smelter 2275.

ENGINEERING CONTROLS

The only engineering control used to protect workers from hazardous agents is general ventilation. This ventilation is provided by large doors which can be opened. OSHA and state inspections have reportedly found this smelter in compliance with applicable regulations. No excessive exposure to heat or noise was observed and there were no visible fumes being emitted from the furnaces.

INDUSTRIAL HYGIENE

Measurements

This smelter does not engage in routine air monitoring for the chemical agents found in the workplace.

Personal Protective Equipment and Hygiene

Respiratory protection is not required anywhere in the smelter.

In general, other personal protective equipment such as safety shoes are required by all employees, while face shields, leggings, and aprons are required when pouring metal.

Employee Medical Program

Currently there is no employee medical program.

OBSERVATIONS

Raw Materials Receiving

- All raw materials, primary zinc ingots, new copper, aluminum, and magnesium scrap, and some fluxing agents, are received by truck.
- Lift trucks are used to unload the trucks.
- Raw materials are stored in separate areas in the warehouse portion of the smelting building.

Furnace Area

- The furnace area contains four pot type open furnaces.
- Each furnace has a capacity of approximately 3,630 kg (8,000 lb).
- The furnaces are fired using #2 fuel oil.
- The combustion gases exit the smelter building and then are directly vented to the ambient atmosphere.
- No hoods are provided for the furnaces.
- The furnaces operate for approximately three hours from beginning heat to pouring.

- Once the desired metal composition has been obtained, the alloy is poured into stationary water cooled ingot molds using pumps.
- The water used for ingot cooling is pumped through a cooling tower like assembly on the roof of the building and is then recycled to the molds.
- The cooled ingots are removed from the molds and stacked by hand onto pallets.
- The pallets are moved by lift trucks and stored until delivered.

Laboratory Facilities

Spark sources mass spectrometry is used to analyze the incoming metal and product metal composition.

PRELIMINARY SITE VISIT

SMELTER 2295

(Secondary Copper Smelter)

SUMMARY

Smelter 2295 is a secondary copper smelter. Most of this plant's products are copper-based alloys. The final products are in ingot form. This facility consists of five areas: scrap receiving, sorting, drying, and storage; copper reverberatory and rotary furnace smelting/refining/alloying; ingot casting; product storage; and pollution control, both air and water. In addition, a small amount of zinc alloys and a lesser amount of lead alloys are produced.

The air pollution control scheme used at this plant relies primarily on furnace hooding ducted to baghouses for gas and particulate control. This plant uses top charged reverberatory furnaces with automated charging doors and a damper system which opens the ducts to the baghouse when the charging doors are open. The rotary furnaces are extensively hooded over both tapping and charging ports and there is a hooding system designed to capture fugitive emissions. Afterburners are used on the vent stream from the thermal dryers to eliminate combustible particulates and gases. These gases then exit through a stack. These measures appear to be effective and the stacks are clear.

General ventilation for the furnace room is provided by open doors, side and roof vents with fans. In addition, portable fans are used to provide local ventilation for areas where heat or gas might be a problem. General ventilation was good and no excessive exposure to heat was observed.

GENERAL

For copper-based alloy production, a reverberatory and a rotary furnace are used. The major raw materials for the smelter are scrap copper, brass, and bronze. These are both new and old scrap. New scrap is defined as scrap produced during the manufacture of a finished product while old scrap is comprised of worn out, damaged, or obsolete articles. The scrap is received by truck or rail, sorted, and stored in separate bins. If necessary, the scrap is crushed and dried prior to charging into the furnace.

The actual smelting process is a combination of scrap blending and fluxing. Caustic soda is sometimes used as a flux in the

furnaces. In addition, air may be blown into the melt to oxidize impurities. Once the desired metal composition has been obtained, the copper-based alloy is poured into ingot molds and water cooled. The hardened ingots are then loaded onto pallets and stored until delivery. The primary customers for the ingots are brass foundries.

In addition to the copper-based alloys, this plant has one small lead kettle, a small zinc alloying furnace, and a small Cupola furnace which is charged with large pieces of scrap.

- o Processes
  - 3 copper reverberatory smelting furnaces
  - 5 copper rotary smelting furnaces
  - 1 lead smelting kettle
  - 1 zinc alloying kettle
  - 1 Cupola furnace
- o Capacity
  - 1,100-1,400 metric tons (2,500-3,000 tons)/month copper alloys
- o Employment
  - Approximately 150 production workers
- o Age
  - Originally built in approximately 1920
- o Raw Materials
  - Foundry drosses and skimmings
  - Copper, brass, and bronze scrap (all kinds)
  - Caustic soda
  - Granulated charcoal
- o Products (all in ingot form)
  - Copper-based alloys
  - Lead alloys
  - Zinc die-cast alloys

ENGINEERING CONTROLS

Engineering controls used to limit hazardous exposure include:

- o the hoods and damper system over the charging ports on the reverberatory, rotary, and Cupola furnaces
- o the hooding on the furnace tapping ports,
- o the fugitive gas hooding system,
- o the hooding and afterburner on the thermal dryer, and
- o general ventilation throughout the plant.

The hoods over the top charged reverberatory furnaces are provided with an automatic damper opening system. When the charge doors are opened, the damper opens to draw the gases and dusts away. A similar system is used for the charging ports of the rotary and Cupola furnaces. It appears that a system such as this allows more efficient and effective use of tha available ventilation system capacity. The gases and fumes collected are

cooled by either water sprays or by U-tube coolers and are then sent to a baghouse for control of particulates. The hot fume baghouses are automatically shaken.

The tapping ports of the reverberatory and rotary furnaces are also hooded to collect fumes and gases. These gases are also directed to a baghouse for control.

The fugitive fume collecting system involves extensive hooding over the rotary furnaces and the reverberatory casting operation. The gases and fumes collected in this ventilation system are close to ambient temperature and require no further cooling before being sent to the fugitive fume baghouse. This baghouse is manually shaken. The ampere loading of the fan motors is monitored to determine the shaking intervals. The particulates collected in these baghouses have the following approximate composition by weight: Zn, 65 percent; Pb, 5 percent; and Cu, 1-2 percent. This material, approximately 1.5 metric tons (3 tons/day), is transported by screw conveyors to covered hoppers where it is stored until shipped out by rail. It is sold for either reclamation of the metal values or for fertilizer production. The income produced by this by-product covers the cost of power and part of the maintenance for the ventilation system. The baghouses appear to be effective for reducing particulate emissions since the stack is clear.

The volatiles and particulates produced in the thermal dryer are fed to a gas-fired afterburner for control of the combustibles. The gas is then sent to a stack. The dryer was not in operation during our visit so no statement concerning effectiveness can be made.

General ventilation for the furnace room is provided by a combination of roof and side vents with fans and open doors. In addition, portable fans are used to provide local ventilation. The general ventilation was sufficient to prevent any significant heat exposure.

INDUSTRIAL HYGIENE

Measurements

This smelter does not engage in routine air monitoring for the chemical agents found in the workplace. In the past, their insurance carrier has performed limited monitoring for lead in air and the company has also participated with the Environmental Protection Agency (EPA) in determining the effectiveness of air pollution control equipment. One employee is biologically monitored every six months to determine absorption of lead.

Personal Protective Equipment and Hygiene

Respiratory protection is required when bags are changed in baghouse dust collectors. Details concerning the maintenance, sanitation, and training program associated with these respirators were not obtained. 3-M disposable dust respirators are generally available for all production employees on a request basis.

A variety of other personal protective equipment is worn throughout these smelting operations. In general, safety glasses with side shields, safety toe shoes, and hard hats are required in most operating areas. In metal pouring areas, employees are required to wear safety toe shoes with metatarsal protectors and to wear leggings when pouring hot metal. Employees in the hot metal areas also wear heat-resistant gloves with a furnace cuff. Additional protective equipment such as aprons, face shields, heat-resistant clothing, etc., is worn in various areas of the plant. The company does not provide clean work clothing to employees nor does it provide for the laundering of their work clothing.

Lockers, showers, and changeroom facilities are provided. A clean heated locker-room facility is provided for production workers. This facility has adjacent showering, hand washing, and toilet areas. Employees are encouraged to shower before leaving the work premises.

Employee Medical Program

Currently this plant provides pre-employment physical examinations. An annual physical examination program is in the development stages. Biologic monitoring is provided for only one employee who operates the lead-base alloy melting facility.

OBSERVATIONS

Raw Materials Receiving

- Raw materials at this plant are received by truck and rail.
- The company has recently constructed a receiving warehouse which is utilized to store various raw materials in segregated bins until they are needed in the production process.
- The receiving warehouse is organized in aisles with bins along the aisles. The bins hold loose scrap, etc., of a particular composition.
- Scrap is received loose (e.g., radiator tubes from radiator plant), bailed (e.g., used radiators), and in compressed blocks.
- Shipping and receiving is conducted on a two-shift basis. Approximately 20 employees work in these areas.

- Several of the raw materials received in small quantities are placed in 0.2 cubic meter (55 gallon) drums or in small dumpster-like bins. The drums and bins may be handled with a forklift.
- Borings and drillings are usually stored in bins in the warehouse and handled with payloader-type material handling equipment.
- Raw materials received by this smelter come basically from scrap dealers in carload quantities. This smelter does not perform insulation removal from copper wire or other similar scrap treatment processes.

Scrap Compression

- Radiators are received at this smelter in bales which are held together with metal straps. Bales of radiators are moved to an area in the rear of the receiving warehouse. At this location, the bales are opened and the radiators are sorted. Individual radiators are fed into a ram compactor which compresses the radiators into solid blocks of approximately 0.03 cubic meter (one cubic foot) volume. These blocks are handled by hoists and are piled onto skids which can be moved by forklift truck. The ram compactor is local exhaust ventilated to a cyclone dust collector located outside the work area and the effluent air stream released to the ambient environment. The compactor did not appear to be excessively noisy nor did there appear to be significant emissions of dust or other contaminants from this operation.
- This ram compactor is also used to reduce the volume of other types of loose scrap, for example, the scrap materials generated at a radiator assembly plant.

Crushing and Drying of Borings and Drillings

- Bulk quantities of borings and drillings are received at this smelter. These materials contain cutting oils and other carbonaceous substances which must be removed before these materials can be charged to the smelting furnaces. Also, the relative size or configurations of these materials may be such that they are difficult to handle. Therefore, it is necessary to process the boring and drilling scrap through a crusher and then a dryer to remove unwanted contaminants.
- Borings and drillings are moved from the receiving warehouse via dumpster-like bins to an adjacent building housing a hammermill and rotary dryer with afterburner. The borings and drillings are emptied into a hopper which feeds the hammermill. After milling, the material is conveyor fed to a rotary gas-fired dryer. The dryer is maintained at a temperature of approximately 260°C (500°F) which drives off cutting oils and other materials to the

afterburner which completes the combustion of these materials at a temperature of approximately 870°C (1,600°F). The effluent stream from the afterburner is released to the ambient air.

- Following crushing and drying, the borings and drillings are passed through a magnetic separator to remove ferrous metals.
- Noise is a recognized problem in the crushing and drying area. The hammermill, as well as the firing mechanisms for the afterburner, all create substantial noise levels. Fortunately, employees are not required to spend long periods of time in this building as this equipment will operate unattended.

Furnace Building--Copper-Base Alloy Recovery

- The furnace building for copper-base alloy recovery contains 2 reverberatory furnaces and 5 rotary furnaces. The reverberatory furnaces are of equal size with capacities of 68,100 kg (150,000 lb) each. The five rotary furnaces vary in size from 20,000 to 32,000 kg (45,000 to 70,000 lb) capacity. These furnaces are primarily natural gas fired; however, they can be converted to operate on fuel oil.

Reverberatory Furnaces

- The reverberatory furnaces are of top-feed design. Scrap is brought into the furnace building in dumpster-like containers which are moved by forklift trucks. These containers are elevated to the top of the reverberatory furnaces by a raising mechanism and dropped into the charging port mechanically.
- The charging port is operated remotely with the operator several feet from the furnace opening. A horizontal sliding door opens to allow the charge to be poured into the furnace. As the charging door slides open, a damper in the exhaust ventilation system for the charging port opens, and fugitive emissions from the charging process are exhausted to a baghouse dust collection system.
- Observation of the charging port ventilation system which was demonstrated during our visit, indicated that the system effectively captured fugitive emissions emanating from the furnace while the charging port was open. The charging operating station was sufficiently removed from the hood area so that the charging operator would not be expected to be exposed to emissions from the furnace during charging.
- The firing mechanisms for the furnaces are a recognized source of excessive noise. These firing mechanisms contribute to the overall background noise in the furnace building, and control of these noise sources would be difficult.

- Air lancing is used to facilitate removal of impurities from the alloy melt. The metal oxides formed by air lancing are exhausted to the baghouse, and the analysis of baghouse dust from reverberatory furnaces indicates that it contains approximately 65 percent zinc and 5 percent lead. The lancing operation is performed from an area at the side of the reverberatory furnace. Employees performing this operation wear a variety of personal protective gear including face shields, leggings, furnace cuffs, etc.
- The reverberatory furnaces are tapped into a holding ladle which then empties into the ingot molds. The holding ladle and the pouring operation are hooded and vented to the hot emission baghouse. The ladle hoods in the pouring area were designed to provide a 1 meter/second (200 ft/min) control velocity. The man performing the pouring operation can manipulate the ladle from a remote location approximately 2.5 to 3 meters (8-10 ft) away. Three men work in the pouring area and rotate job activities approximately every 10 to 20 minutes to reduce exposure to the heat generated by the hot metal which has a temperature in excess of 1,370°C (2,500°F).
- The emissions collected by ladle hoods and the emissions from oven firing are taken through refractory lined ductwork to a spray cooling section and then through a baghouse.
- The metal is poured into ingot molds which are hooked together in a conveyor line. Graphite is added to the ingot molds before metal is poured to produce a finished ingot with a smooth top.
- The company's insurance carrier has performed lead monitoring at the pouring station and reported that concentrations were below 50 ug/m^3. It is not known what alloy was being poured at the time these measurements were made.
- From the pouring area, the casting conveyor line passes into a section where the molds are water cooled and then to an area where the ingots are dumped out of the molds. The ingots fall into tote boxes which are then taken to the shipping waterhouse for loading onto pallets for shipment.
- The process of dumping ingots out of the casting line into tote boxes creates a significant amount of noise which adds to the noise from the firing mechanisms of the reverberatory furnaces in this area.
- Although the pouring operation is well hooded, it lacks protective barriers which would shield employees from contact with splashes of metal. Also, employees were not observed to be consistently wearing protective equipment items such as leggings, spats, or face shields. These practices could result in serious injury.

Rotary Furnaces

- The five rotary furnaces are located in the same building with the two reverberatory furnaces. The rotary furnaces are also exhausted to a baghouse through a refractory-lined flue. These rotary furnaces are gas or oil fired and are charged from the side. The rotary furnaces appear to be well controlled to capture emissions from the firing process.
- The charging port for each rotary furnace is hooded. Also the pouring operation for each furnace is hooded with handling or poured ingot molds similar to the operations associated with the reverberatory furnace.
- Again, the distinct possibility for employee contact with molten metal was observed primarily due to lack of shielding and inconsistent use of personal protective equipment.
- As with the hoods for the reverberatory furnaces, the hooding for the rotary furnaces was designed to provide a control velocity of 1 meter/second (200 ft/min).

Baghouse Building

- As mentioned earlier, the emissions from the recovery furnaces are drawn off through refractory-lined ducts, cooled with water spray, and processed through baghouses. The water spray cooling system reduces the airstream temperature from 980° to 1,100°C (1,800°-2,000°F) down to approximately 120° to 150°C (250°-300°F). The baghouse serving the recovery furnaces in the first building collects approximately 1.5 metric tons (3 tons) of zinc oxide fume each day. The baghouse dust assays approximately 65 percent zinc, 5 percent lead, and 1-2 percent copper. This baghouse dust is sold to zinc refiners or fertilizer manufacturers. In approximate terms, the sale of baghouse dust may compensate the smelter for the power and maintenance costs associated with baghouse operations.
- Sufficient baghouse capacity has been constructed so that one of the three bags can be shut down for cleaning without adversely affecting contaminant control in the furnace building. The baghouse was initially designed to provide approximately 1.75 square feet of bag surface area per cubic feet/minute of air to be filtered. The bags in these units are mechanically shaken. The particulate collected is screw conveyed to a hopper and then to a silo where it is stored until sale and shipment.
- Also contained in the baghouse building is a Cupola furnace used to recover material from residues generated at this smelter. It is used to reclaim "coarse" residues. The waste from the furnace is removed and deposited in a landfill. Some slag is utilized as a backfill material in sewer systems.

- It is charged by remotely operated skip hoists and the charging point is hooded with charging emissions being sent to a baghouse.
- The main effluent gas stream from the furnace is captured and processed through a baghouse.
- The furnace is tapped into a sand molding pit. Again, the employees performing the tapping operation are subject to contact with hot metal. Somewhat improved shielding, as well as more comprehensive personal protective equipment, would reduce this hazard.
- Although there is a significant possibility that carbon monoxide may be present in appreciable concentration in the baghouse area, tests have proven that little, if any, CO is present. The gases collected from the recovery furnaces and the operation of the Cupola furnace could potentially contribute to CO build-up in the baghouse building; however this build-up is apparently avoided through the use of roof ventilation.
- The company requires that a dust respirator be used when changing bags in the baghouse units. Again, there is an unknown possibility of exposure to carbon monoxide during these work operations.

Zinc Building

- The zinc recovery operation is a simple melting and casting process where zinc is melted and some aluminum is added.
- There are three gas-fired, open-topped furnaces for zinc melting.
- No fluxing is performed in this operation.
- Metal temperatures are approximately 430°C (800°F) (below fuming temperature) and ingots are cast by the dye-casting method.
- No comprehensive ventilation is provided for the zinc melting and casting area.
- The zinc alloy recovery operation was not in production at the time of this visit.
- Lead and tin relaying kettles are also located in the zinc building. One man operates these kettles on a part-time basis. The kettles are hooded to a baghouse and the particulate which is captured is sold to a lead smelter. The hood enclosure of the lead and tin kettles is not particularly good. Reportedly, the man operating these kettles is checked for lead absorption every six months through a biological monitoring program.

Concentrations of Fine Residues

- The residues from the recovery processes at this smelter are segregated into "coarse" and "fine" materials. The coarse materials are recycled through the Cupola furnace located in the baghouse building. The fine residue

materials are processed through a specific gravity separation and cleaning process. Metal recovered in this manner is then charged to the furnaces in the furnace building. The remaining residue which is of no commercial value is sent to a landfill for disposal.

Chemical and Physical Laboratory Testing

- This smelter has its own chemical and physical testing facilities. Small furnaces are used to melt samples of prepared alloy, and specific chemical tests are run to ensure composition, quality control, etc. Also certain physical tests are performed on alloys to ensure they meet customer specification. The laboratory facilities were not in active use at the time of the visit.

Shipping Area

- Ingots are moved to the shipping warehouse in tote bins. They are then manually stacked onto pallets bound with steel strapping and covered with a plastic material. The ingots weigh approximately 9 kg (20 lb) each.
- Propane or LP fueled lift trucks are used to move products in the shipping area. Similarly fueled materials handling equipment is used throughout this smelter.

Process Water Treatment

- This plant utilizes a closed loop process water system. Process water passes through a settling pond and filtration unit before being recycled.
- Sediment from the settling pond is disposed in a landfill.

Miscellaneous

- No asbestos containing refractory cements or similar products are utilized at this smelter.
- There have been no recent cases of metal fume fever at this smelter.

PRELIMINARY SITE VISIT

SMELTER 2520

(Secondary Lead Smelter)

SUMMARY

Smelter 2520 is a small secondary lead alloy smelter. Most of this smelter's products are lead-based alloy ingots. The facility consists of three areas: raw materials receiving and storage; lead alloying/casting; and product storage. Figure 9 shows the general layout of this smelter.

All of the pot furnaces are provided with hoods to remove fumes and gases. These hoods are ducted directly to the ambient atmosphere without any control. The furnace operation is enclosed in a large building with windows located around the parameter. In addition, there are roof vents in the building for general ventilation. No excessive exposure to noise or heat was observed.

GENERAL

Smelter 2520 uses port furnaces to melt down primary and secondary lead ingots and produce alloys containing tin, zinc, and antimony. A small amount of scrap lead material is also handled. The lead ingots and the alloy agents are melted down and when the desired metal composition has been reached, the alloy is cast into ingots. All the products of this smelter are in ingot form.

- o Processes
  - 6 pot type alloying furnaces
  - 1 reverberatory sweating furnace
- o Capacity
  - pot sizes range from 12,730 kg (28,000 lb) to 910 kg (2,000 lb)
- o Employment
  - 9 production workers/shift
- o Age
  - Approximately 100 years old
- o Raw Materials
  - Primary and secondary lead ingots
  - Scrap including type metal, solders, and babbits
  - Fluxing materials including ammonium chloride, sulfur, and pine tar resins
- o Products (in ingot form)
  - All types of lead-based alloys

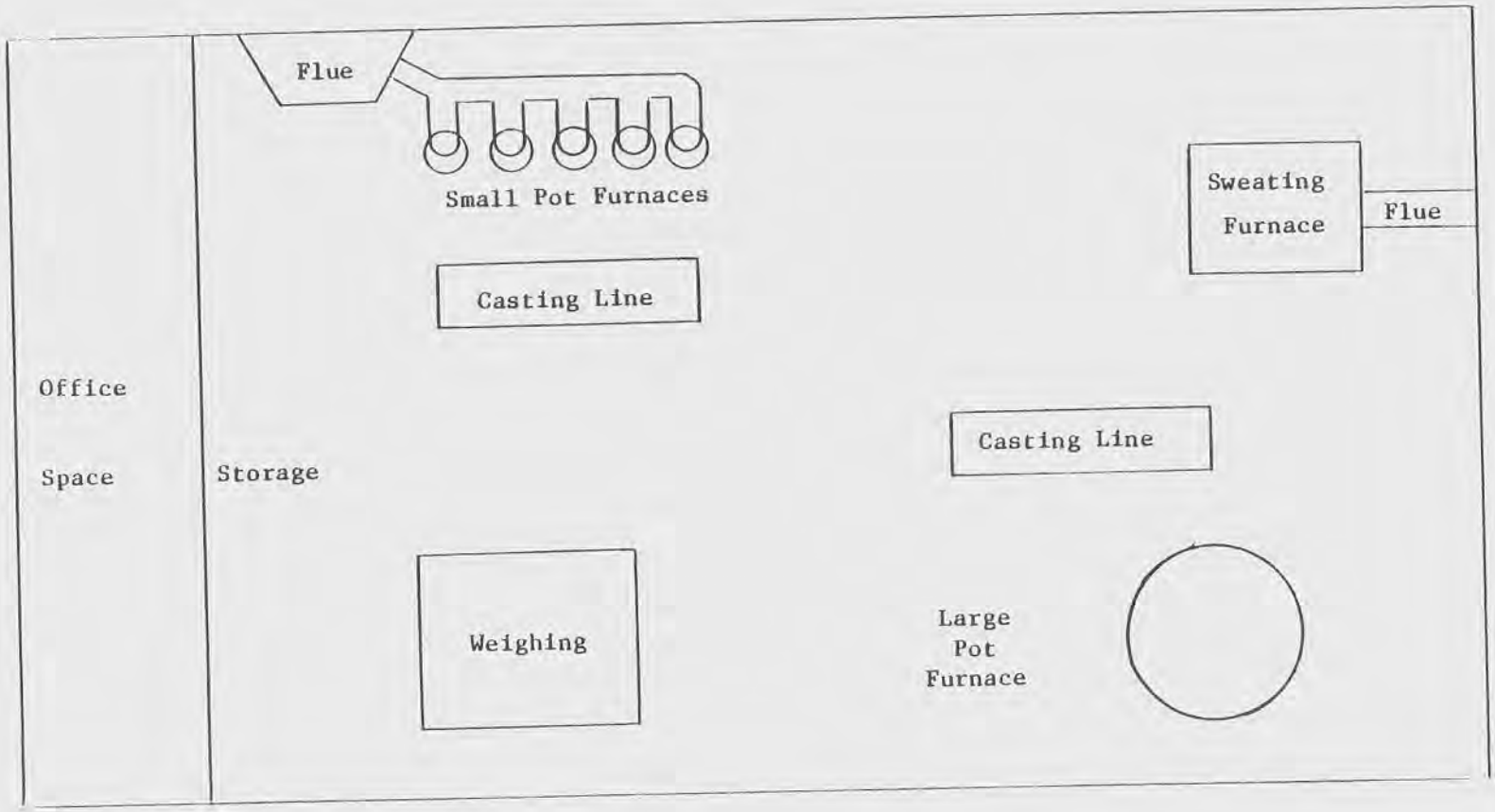

Figure 9. General layout of Smelter 2520.

ENGINEERING CONTROLS

The engineering controls used to protect workers from hazardous agents are the hoods over the pot furnaces and general ventilation. Since most of the alloying operations take place at relatively low temperatures, little fuming occurs during these operations and there are no visible emissions from the metal bath surface. Therefore, no statement concerning effectiveness can be made based upon visual observations. No excessive exposure to heat or noise was observed.

INDUSTRIAL HYGIENE

Measurements

This smelter does not engage in routine air monitoring for the chemical agents found in the workplace. Their insurance carrier has taken air samples and indicates that there is no excessive exposure to metal fumes.

Personal Protective Equipment and Hygiene

Respiratory Protection--
Respirators are supplied but their use is not required in the smelter.

Other Personal Protective Equipment--
In general, safety shoes, face and eye shields, and other suitable clothing to protect against hot metal are worn.

Employee Medical Program--
This smelter is in the process of instituting a program to monitor blood lead levels on a regular basis.

OBSERVATIONS

Raw Materials Receiving

- Most of the raw materials are received by truck.
- These raw materials include primary and secondary lead ingots, antimony, and tin.
- Small amounts of scrap are also received, sorted, and samples taken for analysis.
- The metal samples are sent out for analysis.
- Lift trucks are used to unload the trucks and to move materials around.

Furnace Area

- The furnace area contains six pot type furnaces.
- Five of the furnaces have a capacity of 910 kg (2,000 lb); the sixth has a capacity of 21,730 kg (28,000 lb).

- The furnaces are fired by using fuel oil.
- The furnaces are provided with hoods which are vented directly to the atmosphere.
- Once the desired metal composition has been obtained, the alloy is poured into ingot molds.
- Two conveyor type casting lines are used to cast ingots, one for the large pot and one for the other five pots.
- There are also hand-casting benches used for the five smaller pots.
- The molds in both the casting machine and the hand-casting bench are water cooled.
- The five small pots utilize a common ventilation system.
- The large pot furnace has a separate duct system.
- The cooled ingots are stacked on pallets by hand.
- The pallets are moved using lift trucks and are stored until delivery.
- Drosses produced during the alloying process are sold to other smelters for recovery of their metal value.
- In addition to the pot furnaces, this smelter has a small reverberatory sweating furnace. This furnace is seldom used and has no engineering controls associated with it.

PRELIMINARY SITE VISIT

SMELTER 2640

(Secondary Copper, Brass, and Bronze Smelter)

SUMMARY

Smelter 2640 is a small secondary copper, brass, and bronze smelter. Most of this smelter's products are copper-based alloys in ingot form. In addition, this smelter produces some lead and zinc alloy ingots. This facility consists of five areas: scrap receiving, sorting, and storage; rotary and pot furnace smelting/refining/alloying; ingot casting; product storage; and pollution control.

The air pollution control scheme used at Smelter 2640 relies on a venturi scrubber for particulate control. The rotary and pot furnaces are hooded and ducted to the wet scrubber. Hydraulic dampers are used to add dilution air to the gas streams when necessary to maintain an inlet gas temperature to the scrubber of less than 450°F. The sludge produced by the wet scrubber which is primarily zinc oxide is either sold as fertilizer or sent to a landfill.

Little general ventilation is supplied to the furnace room. There are no open doors or side vents. Some ventilation is provided by roof monitors with fans. Visibility was good and no excessive exposure to heat or noise was observed.

GENERAL

For copper-based alloy production a rotary furnace is used. The major raw materials for the smelter are scrap copper, brass, and bronze. Smaller amounts of lead and zinc alloys are produced in pot furnaces. All types of copper, brass, bronze, lead, and zinc scrap are received primarily by truck, sorted, and stored in boxes or drums in a warehouse. Borings and turnings are processed through a briquetting machine to produce a more suitable feed to the furnace.

The actual smelting process is a combination of scrap blending and fluxing. Glass, sodium nitrate, and borax are used as fluxes in the furnaces. Once the desired metal composition has been obtained, the copper-based alloy is poured into ingot molds. The ingots are loaded onto pallets and stored until delivery. Slag produced is crushed in a ball mill and the brass present is recovered using vibrating screens with a water wash.

Lead- and zinc-based alloys are produced in steel pot furnaces. These processes are also a combination of scrap blending and fluxing. In addition to the port furnaces, there is also a sweating furnace for recovering babbitt from bearing journals.

- o Processes
  - 2 rotary smelting/alloying/refining furnaces for copper-based alloys
  - 4 pot smelting/alloying/refining furnaces for lead- and zinc-based alloys
- o Capacity
  - 2 rotary furnaces @ 14,500 kg (32,000 lb)
  - 2 pot furnaces @ 900 kg (2,000 lb)
  - 1 pot furnace @ 4,540 kg (10,000 lb)
  - 1 pot furnace @ 9,080 kg (20,000 lb)
- o Employment
  - Approximately 60 production workers
- o Raw Materials
  - Copper, brass, bronze, lead, and zinc scrap (all kinds)
  - Fluxes such as glass, sodium nitrate, and borax
- o Products (in ingot form)
  - Copper-based alloys
  - Lead and lead-based alloys
  - Zinc and zinc-based alloys

ENGINEERING CONTROLS

Engineering controls used to limit hazardous exposure include:

- o hoods over the pot furnaces,
- o hoods over the rotary furnace casting operation, and
- o remote pouring station booths for rotary furnace tapping.

The pot furnaces are provided with hoods which have doors to allow total enclosure of the furnaces. The doors are opened during charging and tapping of the furnaces. These hoods are ducted into the furnace ventilation system which utilizes a venturi scrubber for control of fume and particulates. This system appears to be effective since there were no visible smoke or fumes emitted from the furnace hoods.

The hoods over the rotary furnace casting operation are designed to reduce exposure to fumes and also steam produced when water sprays are used to cool the ingot molds. The casting operation was not observed so no statement concerning the effectiveness of these controls can be made.

The remote pouring station booth reduces worker exposure to fumes produced at the point of pouring to hot molten metal. The automated operation requires fewer workers and affords them protection from a potentially hazardous situation.

INDUSTRIAL HYGIENE

Measurements

Blood lead measurements are taken for furnace and white metal operation workers. The most recent survey indicated no blood lead level higher than 30 mg/100 mL.

No air monitoring is performed at this time. However, equipment is on order which will allow monitoring of air contaminants in the work atmosphere.

Personal Protective Equipment and Hygiene

Respiratory Protection::
Respirators are required during the furnace pouring operations.

Other Personal Protective Equipment::
A variety of personal protective gear is worn throughout the smelter. Hard hats, safety shoes, glasses, face shields, and gloves are required, depending upon the employee's job.

Locker room/change room facilities with showers and a lunchroom are provided.

OBSERVATIONS

Raw Materials Receiving

- Scrap material of all types is received primarily by truck, sorted, and stored in drums.
- The scrap is moved around using lift trucks.
- A briquetting machine is used to compress scrap such as turnings and borings into a suitable charge for the furnaces.

White Metal Operation

- The white metal smelting, alloying, and refining operations are carried out in pot furnaces.
- Zinc and zinc-based alloys are melted in 900 kg (2,000 lb) pots.
- The pots are hooded and ducted to the furnace ventilation system.
- The zinc product is hand-poured into stationary, water-cooled molds. An automated casting system is presently being designed.
- Lead-based alloys are sweated and recovered from scrap such as bearing journals in a 4,540 kg (10,000 lb) pot furnace. This furnace is also provided with a hood which has a door to allow for complete enclosure of the molten metal.
- It is charged using a lift truck.

- Lead and lead-based alloys are also produced in a 9,080 kg (20,000 lb) pot furnace.
- It is hooded in a manner similar to the 4,540 kg pot.
- Both the 4,540 kg and 9,080 kg pot furnaces are poured using a pump which feeds an automated casting machine.
- The casting machine is not provided with any type of hooding.
- The product ingots are stacked onto pallets and stored in a warehouse until shipped.

Rotary Furnace Operation

- Two rotary furnaces are used to produce copper-based alloys.
- These furnaces are equipped with swing-away burners to facilitate charging.
- The furnaces are charged by shoveling.
- These furnaces, as well as the pot furnaces, are equipped to burn either natural gas or fuel oil. Fuel oil is presently being used exclusively.
- Hoods were provided over the tapping ports of the furnaces.
- The casting lines served by the rotary furnaces are provided with remote pouring station booths. These booths are shielded and provide automatic control of the casting operation.
- The casting machines consist of a continuous belt type arrangement of molds.
- The machines are hooded to capture any fumes or steam produced when water sprays are used to cool the molds.
- Tapping and casting were not observed so no statement can be made concerning the effectiveness of these controls.
- The slag from the rotary furnaces is pulverized using a ball mill. It is then sent to a vibrating screen washer to recover the metal value in the slag. The recovered metal pieces are recycled to the furnaces.
- A rotary dryer is used to lower the moisture content of turnings and borings prior to briquetting. The effluent gases are ducted into the furnace ventilation system.
- A rotary crusher is used to reduce the size of scrap when it is too large to be charged directly to the furnace.
- A magnetic separator is used in conjunction with the rotary crusher to remove ferrous impurities in the scrap.

Wet Scrubber System

- A venturi scrubber is used to remove fumes and particulates from the ventilation gas stream.
- The scrubber is designed to handle 64,000 scfm.
- The effluent gas from the scrubber is sent to a cyclone before being discharged out a stack.
- The sludge produced which consists primarily of zinc oxide is either sold for fertilizer or disposed of in a landfill.

- Temperatures are monitored to maintain an inlet gas temperature of less than 230°C (450°F) and outlet gas temperature of less than 95°C (200°F).
- Manometers are provided to monitor inlet pressure to the venturi, pressure drop across the scrubber, and presure at the far inlet. The pressure drop across the scrubber is maintained at 40 inches of mercury.
- All water used in the plant is recycled.

Laboratory Facilities

- This smelter operates its own laboratory using wet chemical and atomic absorption analysis.

PRELIMINARY SITE VISIT

SMELTER 2780

(Secondary Lead Smelter)

SUMMARY

Smelter 2780 is a large secondary lead smelter. Most of this smelter's production is lead alloy ingots. This facility consists of six areas: scrap receiving, sorting, storage; blast and reverberatory furnace smelting; kettle furnace refining; ingot casting; product storage; and pollution control.

The air pollution control scheme at Smelter 2780 relies on local process hooding ducted to baghouses for particulate control. General ventilation of the workplace is provided by openings in the side of the smelter building.

GENERAL

Smelter 2780 is about 30 years old and employs 250 workers. These workers are represented by the steelworkers union. The raw material for the plant is mostly obtained from scrap batteries which are broken and shredded at another facility and brought in by rail. The plant is composed of one blast furnace and four reverberatory furnaces. The function of the reverberatory furnaces is to melt the scrap and produce a slag which when cooled and broken into chunks can be charged directly to the blast furnace. A small computer controls the blast furnace feed rate, charge mixture, and blast air rate. The blast furnace produces lead bullion which is pumped to kettles for further refining. The blast furnace slag is dumped and allowed to cool.

Most of the processes are now hooded. The air from the hoods goes to one of two baghouses. A third baghouse is being constructed. The gases from the processes are sent to the smaller of the two baghouses for cleaning. The larger volume ventilation gases are sent to the other baghouse. The dust from both baghouses is reprocessed through the reverberatory furnace.

ENGINEERING CONTROLS

The major source of contamination (lead) is dust from the raw material storage area rather than from the smelting operations. This plant has spent 4.5 million dollars in the last two years for worker health, safety, and control equipment. Air samples taken in the plant now average between 1.5 ug/m^3 and 3.55 ug/m^3 compared with an OSHA inspection in July, 1973, which

averaged between 12.5 ug/m^3 and 25 ug/m^3 of lead. Four important engineering controls are being used: hooding, reverberatory encasement, blacktop and concrete ground coverage with washdown, and the blast furnace feed control. Of these, only the ground coverage is not effective.

Hooding and ventilation are very extensive and most effective. The reverberatory furnace, blast furnace, and refining kettles, etc., are equipped with hoods which direct the process gases to a baghouse. As a result, a minimum of gases, vapors, and particulates (dust, fume, etc.) is emitted directly from each process. In addition, the reverberatory furnaces were encased in a steel shell to minimize fugitive emissions from cracks in the refractory walls. The entire operation is under a roof but the sides of the smelter are open providing good general ventilation. There are also several large fans in place to provide spot cooling for workers.

This combination of hooding, process enclosure, and general ventilation is very effective in minimizing worker exposure to chemical agents emitted directly from the processes. A more complete process and control description is being provided.

The automated process control of the blast furnace also helps reduce worker exposure by minimizing the need for workers near the top of the blast furnace. The charging door at the top of the blast furnace shaft is automatically controlled and the feed rates of scrap and coke are monitored and controlled by a minicomputer. This virtually eliminates worker exposure to a potentially hazardous area of the smelter.

Unfortunately, the handling of baghouse dust and shredded scrap creates a fugitive dust problem which partially negates the effectiveness of all of the other administrative and engineering controls.

Baghouse dust is stored in open heaps covered by polyethylene sheets. The wind can easily create an airborne dust problem which can cause the RLV for lead dust to be exceeded. This problem exists for three basic reasons: poor design of storage facilities; poor design of blacktop/concrete ground cover and drainage facilities; and lack of an adequate dust transporting mechanism.

Both scrap and baghouse dust are stored outdoors in piles on either unpaved dirt or paved areas. These piles are covered with polyethylene sheets, but still are a major source of dust. In addition, rainwater and general handling of the dust cause it to be tracked and spread over the entire smelter grounds.

The extensive blacktopping and concrete ground cover could have been an effective control technique. However, because of

inadequate pitch and drainage, runoff water forms puddles which, after drying, become sources of dust. As a result, the frequent washdowns of the work area are not as effective as they could be. Proper storage and ground cover could serve as an effective dust control technique, especially when combined with the wet sweepers which are currently being tested.

The problem of dust handling has not been dealt with effectively. Front-end loaders are used to remove the dust which contributes to the dust spreading problem. It was indicated that pneumatic conveying systems do not work well because of the density of lead dust and the tendency of the dust to cake when it gets wet. Certainly cost is the major factor for not using enclosed, mechanized dust handling systems. At this point in time, a complete revamping of the dust handling system would be a several million dollar project. However, this would be the only hope for meeting the TLV's for lead in an otherwise well controlled smelter.

PERSONAL PROTECTIVE EQUIMENT/WORK REGIMEN/HEALTH PROGRAM

Dr. Norman listed the following worker health programs at Schuylkill:

- new dining room with filtered air supply;
- new restrooms and shower facilities;
- new change house and lockers
- clothing change program (Smelter 2780 has its own laundry);
- mandatory respirator program; and
- mandatory blood lead level monitoring.

A mandatory respirator program is already in effect. All personnel working or entering the plant must wear respirators. The only time a worker is allowed out of the respirator is when he is in a contamination-free area in the break-room (lunchroom) which has its own filtered air supply and in the change room prior to working in the plant or when leaving. All workers turn in respirators and work clothes at the end of the shift. The respirator is cleaned, sanitized, and a new filter installed. The clothes are washed, dried, and put in the "clean" lockers. The worker is required to shower prior to going to the lockers that hold his street clothes. Workers going on shift are issued a clean respirator and clean work uniform; then they change, putting their street clothes in one locker and go into another room to change and pick up articles that were contaminated (hard hat, gloves, shoes, etc.) from their "dirty locker." By this method they have been able to get their blood level below 50 ug Pb/100 cc. Periodic blood testing is done by Lee Norman Associates. If the blood lead level goes above 70 ug/100 cc, the employee is put in a "clean" job for 30 days or until his blood level drops below 60 ug/100 cc. Due to difficulty in fitting respirators to women's faces there are no women working in the plant.

OBSERVATIONS

The only major problem is the fugitive dust which exists because of the poor baghouse dust handling facilities. It is not possible to determine whether elimination of this problem would put the smelter operations in compliance with OSHA standards. However, the airborne lead dust problem would be reduced if enclosed, mechanized dust conveyors were used to transport the baghouse dust to and from storage; dust storage facilities were enclosed to prevent the wind from re-entraining lead dust; and drainage was improved to make washdowns effective.

Three points should be emphasized: the respirator program will have to continue; improvements in dust handling may not put the smelter in compliance with OSHA standards; and the cost of improving the dust handling facilities will be high. NIOSH has an excellent opportunity to demonstrate a combination of engineering controls which could be very effective in minimizing lead dust problems at this plant. The existing controls combined with an improved dust handling system is a control scheme which certainly could be applied to other secondary lead smelters as well as all smelters in the other industry segments.

PRELIMINARY SITE VISIT

SMELTER 2830

(Secondary Aluminum Smelter)

SUMMARY

Smelter 2830 is a medium size secondary aluminum smelter which also produces copper, brass, bronze, lead, and zinc in ingot form. Most of the major processes are equipped with hoods to limit worker exposure to gas and fume. The aluminum smelting area is currently in compliance with OSHA regulations. Future plans are to recover the aluminum from drosses and slags with a process currently under development.

GENERAL

The major raw material for the smelter is scrap aluminum of all kinds. The scrap is brought in by rail or truck, weighed, and separated. The larger pieces of aluminum scrap are sent to a hammermill for shredding, and any iron present is magnetically removed. Boring type scrap, which is usually oily, is crushed to a uniform size and dried prior to smelting. This scrap is also magnetically treated to remove iron. In addition, some scrap is processed through a reverberatory sweating furnace to remove higher melting impurities.

The smelting process takes place in a reverberatory furnace and is a combination of scrap blending and fluxing. This plant uses the Durham process to chlorinate the aluminum and remove magnesium. Basically, the Durham process utilizes a furnace-like chamber outside the main furnace into which the molten aluminum is pumped. Liquid chlorine is injected under pressure into the metal within this chamber and reacts with magnesium. The demagged aluminum then gravity-flows back into the main furnace. The gaseous effluent, if any, from the Durham chamber is sent to the main furnace stack. Once the desired metal composition has been obtained, the aluminum is poured into ingots and allowed to harden.

This smelter also produces a significant amount of brass and bronze alloys using rotary reverberatory furnaces. A small amount of zinc and lead alloys is produced in melting pots.

- o Processes
  - 1 aluminum reverberatory sweating furnace
  - 3 aluminum reverberatory smelting furnaces utilizing the Durham process for chlorine demagging

- 2 brass rotary reverberatory smelting furnaces
- 3 miscellaneous melting pots
- 1 lead alloying pot
- 1 dross processing system (under development)

o Capacity
- Approximately 450 metric (1,000 short) tons aluminum/month
- Up to 450 metric (1,000 short) tons brass/month

o Employment
- Approximately 60 production workers and 5 maintenance workers

o Age
- Aluminum plant started in 1941

o Raw Materials
- Aluminum, brass, zinc, lead scrap (all kinds except batteries)
- Liquid chlorine (rail car)
- Caustic soda
- Soda ash
- White silica sand
- Granular charcoal
- Zinc ammonium chloride
- Sulfur
- Anhydrous borax
- Ammonium chloride

o Products
- Aluminum alloy ingots
- Brass and bronze alloy ingots
- Zinc alloy ingots
- Copper alloy ingots (98 percent copper)
- Lead alloy ingots

ENGINEERING CONTROLS

Engineering controls used to limit hazardous exposure include:

o the Wabash hooding on the reverberatory furnace charging well,
o the Durham process for aluminum demagging,
o the afterburner on the thermal dryer,
o the portable pouring booth in the brass plant,
o the local hooding on the rotary and melting pot furnaces, and
o general plant ventilation.

The Wabash hooding on the charging well of the reverberatory furnaces eliminates gaseous and particulate emissions from this part of the process. Part of the gas and fume collected by the hoods is fed to the combustion air fan and combusted in the furnace burner. The remaining gas and fume are fed directly into the furnace. This system allows the furnace to serve as an afterburner for the combustible particulates. The gases from the

reverberatory furnace are then sent directly to individual stacks. This hooding system appears to be effective. The furnace area and stacks were clear of any signficant particulate emissions.

The Durham process is used for demagging aluminum. This process minimizes exposure to chlorine by enclosing the chamber into which the aluminum and chlorine are pumped. The demagged aluminum flows back to the main furnace (by gravity) onto the casting line. The gaseous effluent from each Durham chamber is sent to the local reverberatory furnace stack.

A thermal drum dryer is used to dry oily borings before they are charged to the furnace. This dryer operates at approximately 200°C (400°F). The dried borings are magnetically screened to remove any iron present and are then stored until needed. The dryer off-gas is sent to an afterburner. The afterburner operates at approximately 870°C (1,600°F) and controls the combustible particulates and gases. It appears to be effective for reducing particulate emissions since the stack and workroom are clear.

In the brass plant, a portable pouring booth is provided for worker protection. The booth consists of a heavy safety glass and metal shield behind which the furnace tapper sits while operating the pouring system.

Local hooding is provided over the brass rotary furnace tapping ports and the melting pots. Furnace tapping was observed and a significant portion of the fumes released during tapping was not captured by the hood. However, the general ventilation provided by roof and side vents appeared to remove these fumes and prevent any build up. The melting pots were not in operation during the walk-through. No report on the effectiveness of the hoods can be made.

General ventilation for the furnace areas is provided by roof and side vents and local fans. However, the visibility in these buildings was poor in some areas and there was significant build-up of gases and fume. In addition, heat and noise levels in some areas could be a problem, depending upon the time workers spend in these areas.

INDUSTRIAL HYGIENE

Measurements

This smelter does not engage in routine air monitoring for the chemical agents found in the workplace.

Personal Protective Equipment and Hygiene

Respiratory Protection--
Respirators are not required but are available upon request by any employee. A self-contained breathing apparatus is available for use in the chlorine storage area. This unit is stored in a heated compartment to prevent freeze up.

Other Personal Protective Equipment--
A variety of personal protective gear is worn throughout these smelting operations. In general, safety glasses with side shields, safety toe shoes, and hard hats are required in most operating areas. In metal pouring areas, employees are required to wear safety toe shoes with metatarsal protectors and leggings when pouring hot metal. Employees in the hot metal areas also wear heat-resistant gloves with a furnace cuff. Additional protective equipment such as aprons, face shields, heat resistant clothing, etc., are worn in various areas of the plant. The company does not provide work clothing to employees.

Lockers, Showers, and Change Room Facilities--
A clean, heated locker-room facility is provided for production workers. This facility has adjacent showering, hand washing, and toilet areas.

Employee Medical Program

Currently, this plant has no medical program.

OBSERVATIONS

Raw Materials Handling

Scrap Receiving--
- Scrap materials of all kinds are received by truck and rail. The scrap is weighed, segregated, and stored in separate bins.
- Front-end loaders are used to move scrap around and to charge some of the furnaces.
- Some of the fluxing agents are delivered in bags, some in bulk.

Scrap Crushing and Cleaning--
- Scrap aluminum is fed through a large hammermill which is enclosed and isolated in one area of the aluminum production plant. All types of scrap aluminum pieces are fed through the hammermill and emerge broken into small pieces which can be charged to furnaces.
- The scrap grinding or crushing process was a significant source of noise in the workplace but has been controlled with an enclosing structure that directs the noise away from the workers.

- After crushing, the scrap pieces are run through a magnetic separator to remove metallic iron. The scrap is then deposited into dumpster-like hoppers which are used to charge the furnaces.
- Aluminum borings containing moisture must be crushed and dried before they can be added to the alloy recovery process.
- This plant has two gas-fired boring drying units which are both equipped with afterburners to complete the combustion of carbonacous materials driven off the boring materials during drying. Borings are received in bulk quantity and deposited in tote boxes. The tote boxes are emptied and the borings fed to a hammermill which crushes them. The crushed borings are then conveyed to two rotary dryers. These dryers operate at approximately 200°C (392°F). The effluent air from the dryers passes through an afterburner which is operated at approximately 870°C (1,600°F).

Aluminum Furnace Building

A general layout of the aluminum furnace building is shown in Figure 10.

Aluminum Sweating Furnace--

- This smelter has one reverberatory sweating furnace into which aluminum scrap, containing higher melting components, is charged. The aluminum is melted and the other components raked out of the furnace. The charging well for this furnace is hooded and the charging door automated.
- The effluent from this hood is sent directly to the furnace stack.
- The worker raking the scrap could be exposed to fairly high heat levels (protective clothing is worn). In addition, local fans are provided for ventilation purposes.
- The molten aluminum is poured into ingots for charging into the smelting furnaces.

Aluminum Alloy Recovery Furnaces--

- This smelter has three reverberatory furnaces used for aluminum smelting. All of these furnaces are equipped with Wabash hooded external charging wells.
- Slag was manually removed from the charging well.
- The gases and fumes captured by the Wabash hood are recycled both directly to the furnace and through the furnace burner in the form of combustion air. This allows the furnace to act as an afterburner.
- The effluent gases from the reverberatory furnaces are sent untreated to the stack.
- This smelter uses the Durham process to remove magnesium from the aluminum with liquid chlorine. Each of the reverberatory smelting furnaces has a Durham chamber at the side of the furnace.

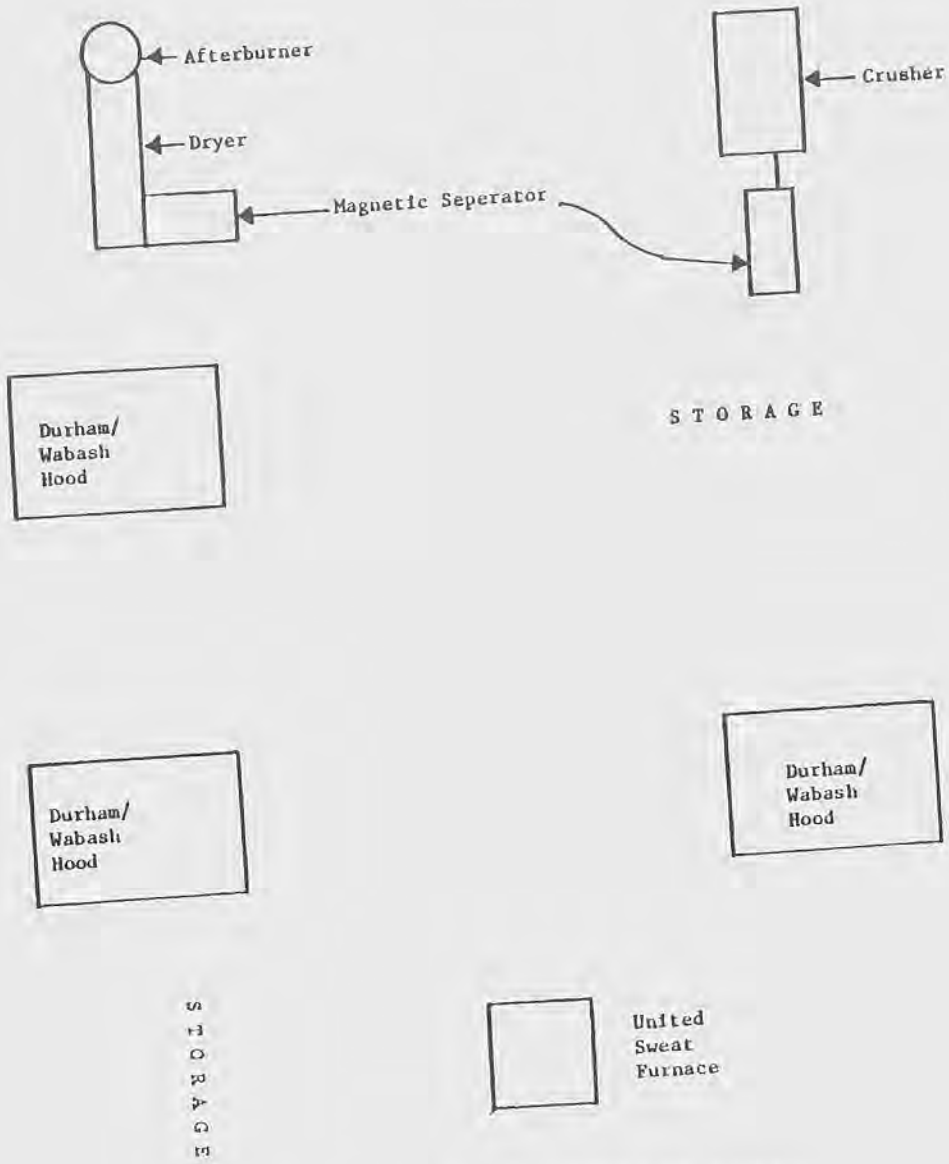

Figure 10. Layout of aluminum plant.

- Aluminum is pumped from the furnace to the Durham chamber. The demagged aluminum is gravity fed back into the furnace.
- The furnaces are tapped to a continuous casting line which features externally water cooled ingot molds.
- The gaseous effluent from the Durham chamber is vented to the main furnace stack.

Chlorine Receipt and Storage--

- Liquid chlorine is received in a rail car which remains on site until empty. When the tank car is empty, chlorine is supplied using 900 kg (2,000 lb) cylinders stored in an adjacent block house.
- Chlorine is presently sent to the furnace in liquid form although a vaporizing unit has been used in the past.
- A manual alarm is provided for the chlorine area. In addition, an emergency self-contained air pack is available.

Brass and Miscellaneous Furnace Building

A general layout for the brass and miscellaneous furnace building is shown in Figure 11.

Brass Recovery Furnaces--

- This smelter used two rotary reverberatory furnaces for brass smelting. These furnaces are charged using a portable, hydraulic ram equipped machine.
- The tapping ports on the furnaces are provided with local hooding. However, during tapping a significant amount of fume was not captured by the hood. The fume was dispersed by a combination of local fans and roof vents.
- The workers tapping the furnace were observed to be wearing face shields, metallized suits and gloves, and leggings with metatarsal guards.
- The molten metal from the brass furnaces is tapped to a continuous casting line with externally water cooled molds. This portion of the casting line is hooded to collect steam.
- Three miscellaneous melting pots, a zinc and a lead alloying pot were located adjacent to the brass furnaces. All of these furnaces were hooded. None were in operation so no statement concerning effectiveness can be made.
- All of the hooding for the rotary furnaces and melting pots are vented to a dry electrostatic precipitator for particulate control. This operation has been a source of trouble and extensive efforts have been made to redesign portions of the electrostatic precipitator to minimize fouling and improve zinc fume recovery.

Dross Processing Area

A general layout of the dross process is shown in Figure 12.

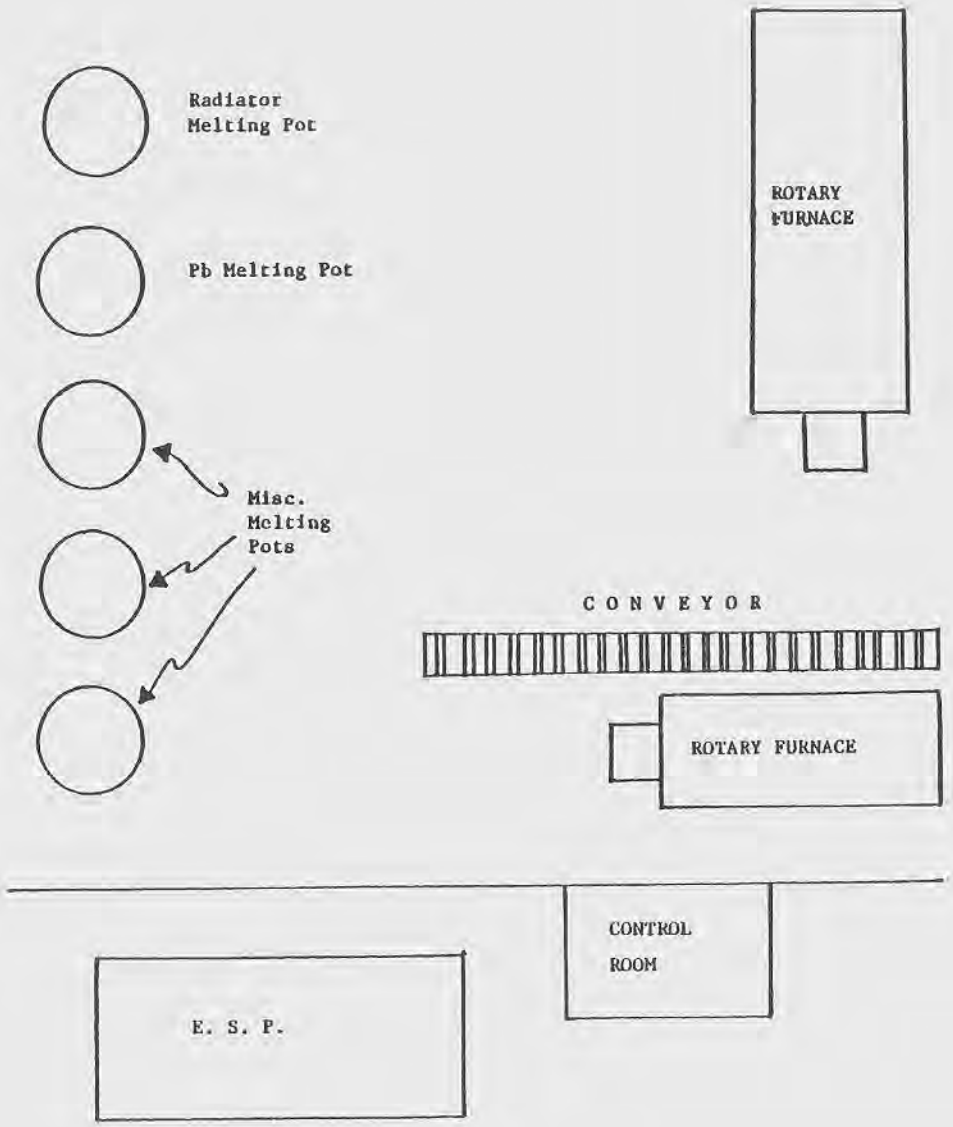

Figure 11. Layout for miscellaneous metal smelting/melting.

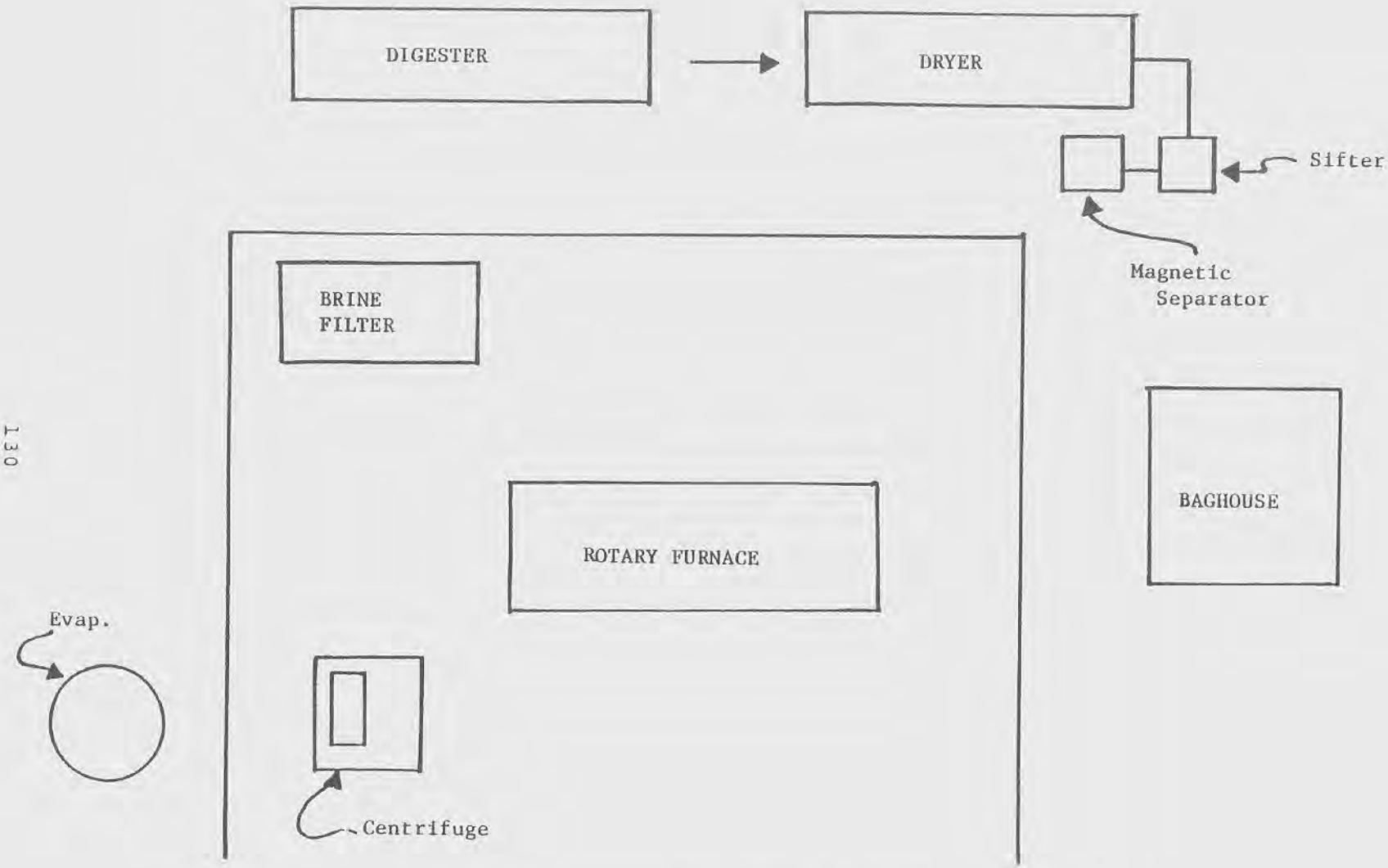

Figure 12. Layout for dross plant.

- This smelter is currently developing this process to recover the 10-25 percent aluminum which remains in the slags and drosses.
- The drosses are first fed to a digester where the fluxing salts are leached out. This brine is then treated to recover the salt.
- The dross sludge from the digester is sent to a dryer. The dryer is vented to the rotary furnace baghouse for fume control. The dried sludge is sifted and passed through a magnetic separation.
- The cleaned, dried dross material is then charged to a rotary reverberatory furnace. This furnace is vented to a baghouse for particulate control.
- The aluminum recovered in this process is approximately 98 percent pure and is fed to the smelting furnaces for purifying and alloying.
- The baghouse dusts are sold as a by-product.

PRELIMINARY SITE VISIT

SMELTER 2895

(Secondary Copper Smelter)

SUMMARY

The processes used at Smelter 2895 are most nearly like those used in the primary copper industry. This is due (partly) to the fact that it produces only wirebar grade copper and no brass and bronze alloys. The other secondary copper smelters produce mainly brass and bronze alloys and a little electrolytically refined copper. Rotary furnaces are widely used for alloy production. The processes used at this smelter are described later in this report.

A second factor which distinguishes this smelter from the rest of the copper smelting industry is that the site receives sulfur-containing cement copper as part of its feed materials. This makes a converter furnace necessary for sulfur removal and makes SO_2 a significant contaminant in both workroom and stack emission areas. This smelter uses practically no engineering controls. Workroom air contamination with organic particulate and metal fumes was heavy and posed a serious potential health hazard to the workers in the smelter. This smelter should be considered as a site for testing engineering controls identified as being effective in other similar applications.

OBSERVATIONS

Engineering Controls

Engineering controls inside the Southwire smelter for the purpose of controlling workroom emissions were practically non-existent. This situation is unusual, especially considering the contaminants such as lead, zinc, antimony, bismuth, nickel, and chlorine which are certainly present in the scrap materials processed.

The hydrocarbons, general nuisance dust, and metal fumes emitted from leaks around the blast furnace charging hood alone constitute a serious potential health hazard to the workers in the smelter. In order to reduce the level of contamination in the workroom air, local exhaust ventilation appeared necessary over the blast furnace charging door, the blast furnace tap, the converter mouth, and the anode furnace tap charging doors. General dilution ventilation for the entire building might also be considered as a means of supplying clean air to the workroom.

No significant workroom or environment problems were observed in the electrolytic refinery (tankhouse). The nickel sulfate plant also appeared to be insignificant with respect to workroom or atmospheric emissions. However, disposal of the liquid effluent from the second stage liberator cells may present an intermittent wastewater disposal problem. Arsene (AsH_3) and phosphene (PH_3) are potential contaminants in this area of the smelter.

Emission Controls

The stack emission control equipment operated by this smelter appeared to be adequate for the gas volumes treated. Baghouses are the major particulate removal devices used. Baghouses are standard equipment for most secondary nonferrous smelters. Stack emissions appeared to be minimal during this inspection. The converter furnace, however, was not in operation and as a result no evaluation of the need for an SO_2 scrubber could be made.

One deficiency noted in the air pollution control system was the bypass on the anode refining (Maerz) furnace flue. The bypass allows the furnace to continue operating during waste heat boiler outages. However, the bypass also elminates the baghouse during these periods and allows the furnace gases to exit the building uncontrolled.

GENERAL PROCESS INFORMATION

- o Processes
  - 1 scrap baling/compacting machine
  - a blast furnace
  - 1 rotary holding furnace
  - 1 converter furnace
  - 1 tilting reverberatory (Maerz) fire refining furnace
  - 1 anode casting wheel
  - 1 electrolytic refinery
  - 1 nickel sulfate plant
- o Capacity
  - Approximately 75 - 85 metric tons copper anodes per day
- o Raw Materials
  - Cement copper pellets
  - Copper scrap (all types)
  - Coke
  - Lime
- o Products
  - Copper cathodes

Most scrap pretreatment is not performed at this smelter. Only a compactor is used to compress clean scrap into a form suitable for charging to the anode furnace.

The processes used at the smelter are similar to a primary copper smelter in many ways. The smelting (blast) furnace, converter,

anode furnace, and tankhouse combination is used by every primary smelter producing wire grade copper. The actual equipment used varies widely between primary smelters, and many smelters ship anodes to electrolytical refineries in other locations. In contrast, most of the other secondary copper smelters use rotary, pot, reverberatory and electric furnaces to melt, refine and alloy copper, brass, and bronze material.

Scrap Compacting

A baling press is used to compact Number 1 copper wire into 2 1/2 foot cubes prior to charging to the anode refining furnace. No other treatment of this clean scrap is required. Other Number 1 copper scrap such as thin plate, wire screen, borings, turnings, and chips may also be compacted with the wire.

Since the scrap is clean, the compaction process is not expected to present a serious air contamination problem. If dusty, highly oxidized scrap were being compacted, there would be some potential for workroom contamination and fugitive emissions as the air was squeezed out of the void space in the scrap.

Blast Furnace

Function--
This process uses equipment and techniques similar to primary copper ore smelting to produce black copper containing 70 - 80 percent copper for further refining. The feed is scrap of lower grade than that input to other secondary refining processes. The overall chemical process in the blast furnace is based on the reduction of copper by the coke fuel and the carbon monoxide formed from it. Impurities such as iron combine to form a slag which separates from the molten copper. The slag and metal mixture is tapped to a rotary or reverberatory furnace for separation.

The scrap is charged at the top of the blast furnace and proceeds downward, meeting reducing gases from the fuel and blast air at the bottom. The scrap types normally charged to a blast furnace include: high iron content copper and brasses; motor armatures; car radiators; foundry sweepings; slags; drosses; and skimmings. The oxides of the base metals either dissolve in the slag, fume off, or are reduced and dissolve in the copper. The black copper product may contain zinc, lead, tin, bismuth, antimony, iron, silver, nickel, or other metals contained in the scrap. Sulfur in the coke or other feed materials reacts with the copper to form copper sulfide. This reaction is important at Smelter 2895 because of the sulfur-containing precipitates present in the scrap. The molten product is tapped into a rotary settling furnace. The slag is skimmed and sent to a granulation process. The black copper is transferred in the molten state to the converter for further purification.

The charge to the blast furnace varies considerably. Table 5 lists different components which were present in charges during 1975 and 1976. The coke used as a fuel and reducing agent comprises about 10 percent of the charge. Limestone and millscale (FeO) are added to form an iron silicate slag for fluxing purposes. The copper is maintained somewhat above its melting point of 1,082°C (1,981°F), usually in the range of 2,000° to 2,100°F. The blast furnace has a rectangular cross-section. The nominal capacity of the furnace is in the range of 80 to 90 tons of copper per day. Approximately 260 to 310 tons of slag material per day are generated in addition to the black copper produced.

Emission Controls--
The blast furnace is a proprietary design purchased from a British company. No data on blast air rates or temperatures were available at the time of our visit. The nature of the pollutants emitted can be estimated based on the type of scrap treated. Pollutants in blast furnace gases may include carbon monoxide, sulfur oxides, nitrogen oxides, halogens, and hydrocarbons. These components are either combustion products or are present as contaminants in the scrap listed in Table 5. No quantitative information on these emissions is available.

The particulate emissions consist of fly ash, soot, metal, and metal oxide fumes. Metals likely to be present in the particulate are copper, lead, zinc, manganese, iron, bismuth, cadmium, tin, and nickel. Total uncontrolled blast furnace particulate emissions have been estimated to be 25 kg/metric ton (50 lb/short ton) of copper produced (Reference 1). One set of analytical data for collected baghouse dust has been cited (Reference 2).

Constituent	Percent
Zinc	58-61
Lead	2-8
Tin	5-15
Copper	0.5
Antimony	0.1
Chlorine	0.1-0.5

Blast air entering the bottom (smelting zone) of the blast furnace shaft reacts with the coke in the charge to form CO. The CO reacts with metal oxides in the charge, reducing them to the elemental state while combining with oxygen to form CO_2. Another portion of the air and coke reacts to form CO_2 and the heat required to maintain the furnace temperature.

The gases rise out of the furnace smelting zone and heat the charge material descending in the furnace shaft. At the top of the shaft, the gases make a 90 degree turn and pass through a brick flue which acts as a settling chamber for the heavy particulate matter.

Table 5. Typical Blast Furnace Charge

Material	Weight Percent in Charge		
	May 1975	July 1975	December 1976
Cement Cu Pellets	24.78	36.05	24.39
Return Slag	14.94	21.42	15.91
Maerz Slag	14.48	15.00	13.47
Anaconda Fines	7.82	7.47	--
Miscellaneous Cu/ Electrical Scrap	7.82	4.67	12.90
Irony Scrap	0.41	3.34	--
Limestone	9.18	1.93	--
Silica	3.54	0.90	--
Millscale (FeO)	1.81	--	--
Dust Pellets	3.53	--	--
Purchased Slag	0.67	--	--
Clay	0.18	--	--
Coke	10.84	9.22	11.40
Copperweld	--	--	2.49
Welding Cable	--	--	9.12
Brittle Copper	--	--	10.32
	100.00	100.00	100.00

The gases next enter U-tube coolers which also have provisions for removing particulate matter which settles as the gas cools. The gases enter an air-cooled heat exchanger and then cyclones before being sent to one or two baghouses for final particulate removal. The gases then exit the baghouses and are discharged through one of two induced draft fans to a single stack.

Engineering Controls--
Stack emissions appeared to be minimal at the time of the inspections. The combination of controls just mentioned is typical of many blast furnace operations in the secondary nonferrous metals industry. Controls for the fugitive emissions from the blast furnace, however, were virtually nonexistent. Hooding of the blast furnace tap was limited to a small hood located about five feet over the launder which fed the small rotary holding furnace. The tapping operation was not observed during this visit but the hood was not designed to provide control of gases and particulates generated by the tapping operation. Rather, it was designed for continual use in supplying part of the combustion air to the blast furnace. Capture of fugitive emissions during tapping was only incidental to the normal operation.

The charging door is located at the top of the furnace shaft. This door leaked furnace gases while closed during normal operation. When the door was opened for charging, heavy fugitive emissions escaped into the workplace. No engineering controls were provided to control fugitive emissions from the charging door.

Rotary Holding Furnace

Function--
The rotary holding furnace is used as an external settler for the blast furnace. Molten copper and slag are tapped from the blast furnace and fed by gravity down a brick launder into the rotary furnace. The metal and slag separate into two layers in the holding furnace. The slag floats on the metal surface and is tapped from an opening in the side of the furnace on a nearly continuous basis. Black copper metal is tapped intermittently into ladles which are transported to either the converter or anode furnace for further processing. Slag tapping is interrupted during the metal taps.

The holding furnace is oil fired. No smelting is performed in this furnace. Heat is required only to keep the charge molten.

Slag skimmed from the holding furnace is fed by gravity into a sluice where it cools and is then pumped to the slag granulation process. It was not made clear whether the water used in this process is in a closed loop, or whether there was a discharge stream.

Emission/Engineering Controls--
At present, the only control device on the rotary holding furnace is the small hood over the feed launder from the blast furnace. As mentioned earlier, this hood captures some of the gases exiting from the rotary furnace and some emissions from the launder during the tapping operation. The hood was not intended as a control device; rather it collects combustion air for the blast furnace. Most of the holding furnace gases are discharged directly into the workroom.

Rotary furnaces in other applications may or may not be controlled depending on the materials processed. Normally, the process gases are ducted to a stack outside of the workroom. Afterburners and/or baghouses are the most common control devices used.

Converter

Function--
In the converter, the black copper from the blast furnace is further refined to increase the copper content from 70 - 80 percent to 90 - 99 percent. The product, called blister copper, is transferred molten to the anode refining (Maerz) furnace. The process steps involved in converter smelting are charging with molten black copper, blowing with air to oxidize copper sulfides and other metals, slagging, secondary blowing, and final slag skimming. Most of the reactions are exothermic; thus, little external heat is required. In fact, if the iron and sulfur content of the black copper feed is too high, pure copper scrap may have to be added to the charge to help keep the temperature under control. A flux containing silica (e.g., sand or glass) is usually added to react with iron oxides. This forms an iron silicate phase which is removed as slag.

The converter used at Smelter 2895 is a cylindrical steel shell lined with ceramic bricks (usually calcined magnesite). Openings (tuyeres) are provided for blowing air into the molten charge when the converter is tilted to the blow position. The particular converter used at Smelter 2985 is a European design and is known as a siphon converter.

Black copper of 70 - 80 percent purity, air, and silica flux are the feed materials. The impurities in the black copper may be iron or copper sulfides, and various other metals and metals oxides such as tin, lead, antimony, and zinc. When the converter furnace is operated without the blast furnace to feed it, solid scrap is charged to the furnace and fuel oil is burnt to melt the charge and maintain furnace temperatures. The temperature is probably maintained a few hundred degrees above the melting point of copper. Little energy is required except incidental equipment motor power when the copper is supplied in the molten state. Fuel oil is burnt to supply whatever additional energy is required.

The converter furnace can be rotated to pour (skim) out slag or blister copper. A large cast iron or steel crucible or ladle carried by an overhead crane is used to transport the molten blister copper to the anode refining furnace. The product can also be allowed to cool and then be stored if the anode furnace is not operating.

The converter furnace removes sulfur and metal impurities from the copper. Black copper fed to the furnace contains approximately 1-2 percent sulfur. After the blowing cycle, the blister copper contains less than 0.01 percent sulfur. Metals such as arsenic, tin, lead, and zinc can be partially volatized and removed from the copper. However, as the copper becomes more pure, these metals exhibit a strong affinity for the copper and do not volatize as readily.

As a result, these metals must be removed by oxidation. A silica flux is added to the molten copper and any iron or other metal oxides present in the copper will form a slag which floats on the surface of the metal bath. The converter is then rotated (rolled) so that only the slag layer pours out of the converter mouth. This slag contains too much copper to discard. It is normally recycled to the blast furnace. Any metal present as an impurity exits the smelter either in the blast furnace slag, the converter baghouse dust, the stack gases, or in the product copper.

Emission Control--
The major sources of converter particulate emissions are the charging and blowing steps which are estimated to each have emission factors on the order of 50 lb/short ton of copper charged (Reference 3). Although the composition of these particulates is not known, these solids are expected to contain significant quantities of volatile metals such as zinc, tin, and lead. The usual form of control device is a baghouse. The gases are first cooled in U-tube coolers and then enter a baghouse.

The baghouse dust constitutes a potential solid waste stream which may have sufficient metal value to warrant further processing. The collected dust is shipped to England where the tin content is recovered. The slag is recycled to the blast furnace for recovery of the copper content and is not a waste stream.

Sulfur dioxide is the major gaseous contaminant emitted from the converter furnace. Data available in the State Environmental Protection Division files indicate that approximately 1,065 pounds SO_2 are emitted per blow. At an average of 36 blows per month, approximately 203 tons of SO_2 are emitted per year.

No SO_2 control is used. No comparable converter operation is known at this time. However, lime scrubbers are used to remove SO_2 from lead blast and reverberatory furnaces. These two

furnace types have a much more constant gas flow than does the converter that is used. It is not known what effect the variable converter gas flow would have on the scrubber operation. The converter was not in operation during this visit. As a result, no qualitative estimate can be made at this time of the potential need for a scrubber or possible problems related to the unsteady converter gas flow.

Engineering Controls--
No engineering controls are used at present to capture gases and particulates emitted into the workplace from the converter. The siphon converter is designed with an integral process gas flue and a small mouth which has a cover. These features are intended to minimize the amount of fugitive gases and particulates emitted. However, some fugitive emissions do escape from the converter.

Since the converter was not operating during the inspection, no estimate of the severity of the fugitives or the need for engineering controls can be made.

Fire Refining

Function--
In this process, the blister copper from the converter is further refined to the 99.9 percent purity level. Clean, high grade copper scrap can also be charged directly to this process which is very similar to the refining process used in the primary copper refining industry. In the fire refining process, copper may be either partially refined to a grade suitable for electrolytic purification or further refined to a commercially salable product grade. All of the fire refined copper is cast into anodes for electrolytic purification.

Fire refining can be accomplished in either a reverberatory or a cylindrical tilting reverberatory furnace. The latter type is generally used with molten copper feed to cast anodes for electrolytic refining. The tilting reverberatory furnace is called a Maerz furnace by plant personnel.

Both oxidation and reduction of impurities are done in this process. The process steps are charging the furnace; melting (or blowing) in an oxidizing atmosphere; skimming the slag; blowing with air or oxygen until the melt is about 10 percent CU_2O (1 percent total oxygen) for final sulfur removal; adding a reducing agent such as reformed gas and surface cover of charcoal or coke; reducing the oxygen content to 0.03 - 0.05 percent by forcing green maple or birch logs beneath the surface of the melt, agitating the melt with reducing gases such as hydrogen, hydrocarbons, and carbon monoxide formed during the "poling" process; reskimming the slag; and casting the melt into anodes. Fluxes may be added to extract impurities, e.g., sodium carbonate for arsenic

and antimony. A variety of specialized reagents and procedures are available for copper material of special composition (Reference 4). The control, sampling, and entire course of the process is still very much an art based on operating experience.

The blister copper from the converter, which is the main feed material, has a copper content in the range of 90 - 99 percent. Other scrap charged to the anode furnace must be clean and relatively impurity-free. A green pole requirement of 50 kg/metric ton of copper processed has been cited (Reference 2). The capacities of furnaces used for this operation usually range from 90 to 360 metric tons. The capacity of the furnace is approximately 360 metric tons per day. Heat necessary to keep the charge molten is supplied by oil-fired burners.

Emission Control--
Gaseous emissions from the Maerz furnace include only a small quantity of sulfur oxides during the oxidation phase of the refining process and hydrocarbons in the reducing phase. Particulates should include carbon from the flux cover and metal oxides. No data on the quantity of emissions generated are available. The processed gases from the Maerz furnace enter a brick flue in which some of the heavy particulate matter settles. The gases next enter a waste heat boiler where the gases are cooled to approximately 427°C (800°F). The boiler is supplementary fired with fuel oil. The steam generated is used to heat the electrolyte in the tankhouse (electrolytic refinery).

The gases exit the boiler and are sent to radian coolers via an induced draft fan. The coolers lower the gas temperature before the gases enter the baghouse for particulate removal. The gases exit the baghouse and are propelled out of the stack via an induced draft fan.

The off-gas system is also equipped with a bypass which diverts the furnace gases directly out of the building during the boiler outages. This bypass is necessary if the anode furnace is to be kept in operation during boiler outages. It if desirable to keep this type of furnace operating continuously; first, because it supplies the rod and wire mills operated by this smelter, and second, because frequent shutdowns will damage the furnace refractory.

An alternative to the existing bypass system would be to install U-tube coolers similar to those used to cool the converter gases. Provisions for dust removal from the bottom of the coolers could be made. The anode furnace gas could then bypass the waste heat boiler and enter the U-tube coolers prior to being cleaned in the baghouse. This control alternative could be used during boiler outages without upsetting the anode furnace operation.

Particulate matter collected in the system is recycled to the blast furnace. Other solid waste streams including the slag and skimmings are also recycled to the blast furnace.

Engineering Controls--
No engineering controls are in use at present to capture fugitive emissions from the anode refining furnace. It is expected that the poling step generates the heaviest levels of fugitive emissions. During the poling step, the charging doors are open. Carbon monoxide, unreacted hydrocarbons, and metal fumes will be emitted into the workroom during these periods. No estimates of the quantity or relative toxicity of these fugitive emissions generated from this operation are available.

Electrolytic Refining

Function--
Copper cathodes of 99.95 percent purity may be produced as the output of the anode refining furnace. Oxygen is the major impurity in the product, usually at the 0.03 - 0.05 percent level. As the anodes dissolve in the electrolysis process, impurities either dissolve in the electrolyte or fall to the bottom of the containing cell to be collected as slime. The cathodes produced in the refinery are melted and cast in subsequent processes in the nearby rod mill.

The electrolyte accumulates both soluble anode impurities (antimony, bismuth, lead, nickel, iron, and zinc) and copper. A replacement rate of up to 75 percent a month of the electrolyte is circulated to liberator cells with insoluble lead anodes and copper starter sheets as cathodes. The copper content is reduced in two stages to 0.1 - 0.2 g/L. Other metals collect on the cathode as scale or fall to the bottom as sludge. The copper produced is recycled to the appropriate process, depending on its purity. The effluent liquid is concentrated and processed for further metal recovery.

The slime from both the primary electrolysis and the electrolyte purification step is filtered or centrifuged. This material may either be processed further for precious metal recovery or discarded. Much or all of the wastewater may be treated and recirculated.

Feed materials other than copper anodes which are required are sulfuric acid and copper sulfate for electrolyte solution makeup. Various additives, mainly glue (0.02-0.06 kg/metric tons to cathodes), are used to suppress coarse crystal growth and entrapment of impurities in the cathode material.

Emission Control--
No significant atmospheric emissions are generated by this process. Any potential liquid effluents may be treated and recycled.

As mentioned earlier, solid wastes are normally processed for precious metals recovery. Typically, any waste materials are generated at the nickel sulfate plant in the electrolyte purification process.

Engineering Controls--
Workroom emissions reported are arsine gas (AsH_3) which results from reduction of arsenic at the cathode. Arsine can also be formed in electrolyte regeneration (nickel sulfate plant), but in neither case are any quantitative data reported. The usual control practice involves the use of exhaust hoods over the electrolysis cells which vent to the outside of the building. If the copper feed contains phosphorus, there is also the possibility of the formation of phosphene (PH_3).

Sample Furnaces (Electric)

Function--
A sample of relatively clean scrap is selected by hand for assaying to determine the purchase price. This scrap is charged to one of two small electric induction furnaces and is melted. A sample is drawn and sent to the laboratory for assay. The remainder of the melt is returned to the scrap inventory.

Emission/Engineering Controls--
Atmospheric emissions from this type of furnace are minimal when clean scrap is being melted. No fuel combustion products are present. The only emissions would be volatile metals or hydrocarbon materials present as contaminants in the scrap. Typically, no controls are used for this type of application. If dirty scrap is being processed, local exhaust ventilation is usually provided and sometimes a baghouse for particulate removal.

Matting Furnaces

Function--
The two small gas-fired crucible furnaces are used for preparing samples of dirty scrap for assay. Because of the high iron content of the dirty scrap, a copper matte (CuFeS) rather than a metal is produced. This allows a more homogeneous sample to be prepared because the iron will tend to be reduced by the sulfur and remain in the matte phase rather than form an oxide slag or dross on the molten copper bath. The reactions which occur are:

$$Cu + S \rightarrow CuS$$
$$Fe + S \rightarrow FeS$$

A mixture of the copper and iron sulfides in approximately stoichiometric proportion is called matte.

In the matting process, it is inevitable that small quantities of SO_2 will be generated in the furnace gas space. The quantity of SO_2 generated depends on how closely the furnace operator can match the weight of sulfur charged for iron and copper. It did not appear that these furnaces are a significant source of SO_2 emissions.

Emission/Engineering Controls--

Atmospheric emissions from this type of furnace are minimal when clean scrap is being melted. No fuel combustion products are present. The only emissions would be volatile metals or hydrocarbon materials present as contaminants in the scrap. Typically, no controls are used for this type of application. If dirty scrap is being processed, local exhaust ventilation is usually provided and sometimes a baghouse for particulate removal.

REFERENCES

1. Shannon, L.J., et al. Particulate Pollutant System Study. Volume 2, Fine Particulate Emissions. Contract PB 203 521. Midwest Research Institute, Kansas City, Missouri. 1971.

2. Nack, H., et al. Development of an Approach to Identification of Emerging Technology and Demonstration Opportunities. EPA 650/2-74-048. Battelle-Columbus Laboratories, Columbus, Ohio. 1974.

3. Vandergrift, A.E., et al. Particulate Pollutant System Study. Volume 1, Mass Emissions. Contract PB 203 128, APTD-0743, Contract No. CPA 22-69-104. Midwest Research Institute, Kansas City, Missouri. 1971.

4. Spendlove, Max. J. Methods for Producing Secondary Copper. I.C. 8002. Bureau of Mines, 1961.

PRELIMINARY SITE VISIT

SMELTER 2920

(Secondary Zinc/Lead Smelter)

SUMMARY

Smelter 2920 is a producer of zinc and lead alloys (approximately 95 percent zinc alloys and 5 percent lead alloys). This facility consists of four areas: raw materials receiving; zinc/lead alloying; zinc ingot casting; and product storage. Figure 13 shows the general layout of the smelter.

Engineering controls used include hoods over the lead alloying pots. No controls are used for the zinc alloying or the solder melting pots. General ventilation is provided by roof fans and large doors in both ends of the building. No excessive exposure to noise, heat, or fume was observed.

GENERAL

Pot furnaces are used to melt down primary zinc and lead ingots and produce alloys containing primarily aluminum and tin. The only type of scrap used is new scrap which is defined as scrap produced during the manufacture of a finished product. This includes such items as aluminum turnings and choppings. The zinc and lead ingots and the alloying agents are melted down and once the desired metal composition has been reached, the metal is poured into ingot molds which are water cooled. This facility has both hand casting benches and continuous casting machines. All the products are in ingot form.

- o Processes
  - 6 zinc alloying pot furnaces
  - 1 type metal melting pot furnace
  - 3 solder alloy pot furnaces
- o Capacity
  - zinc alloy pots, 5,000 kg (11,000 lb each)
  - type metal pot, 9,090 kg (20,000 lb each)
  - solder alloy pots, 360 kg/day (800 lb/day)
- o Employment
  - Approximately 14 production workers/shift
- o Age
  - 2 1/2 years at present facility (operated continuously since 1912)
- o Raw Materials
  - Primary zinc, lead, and tin ingot
  - New aluminum scrap

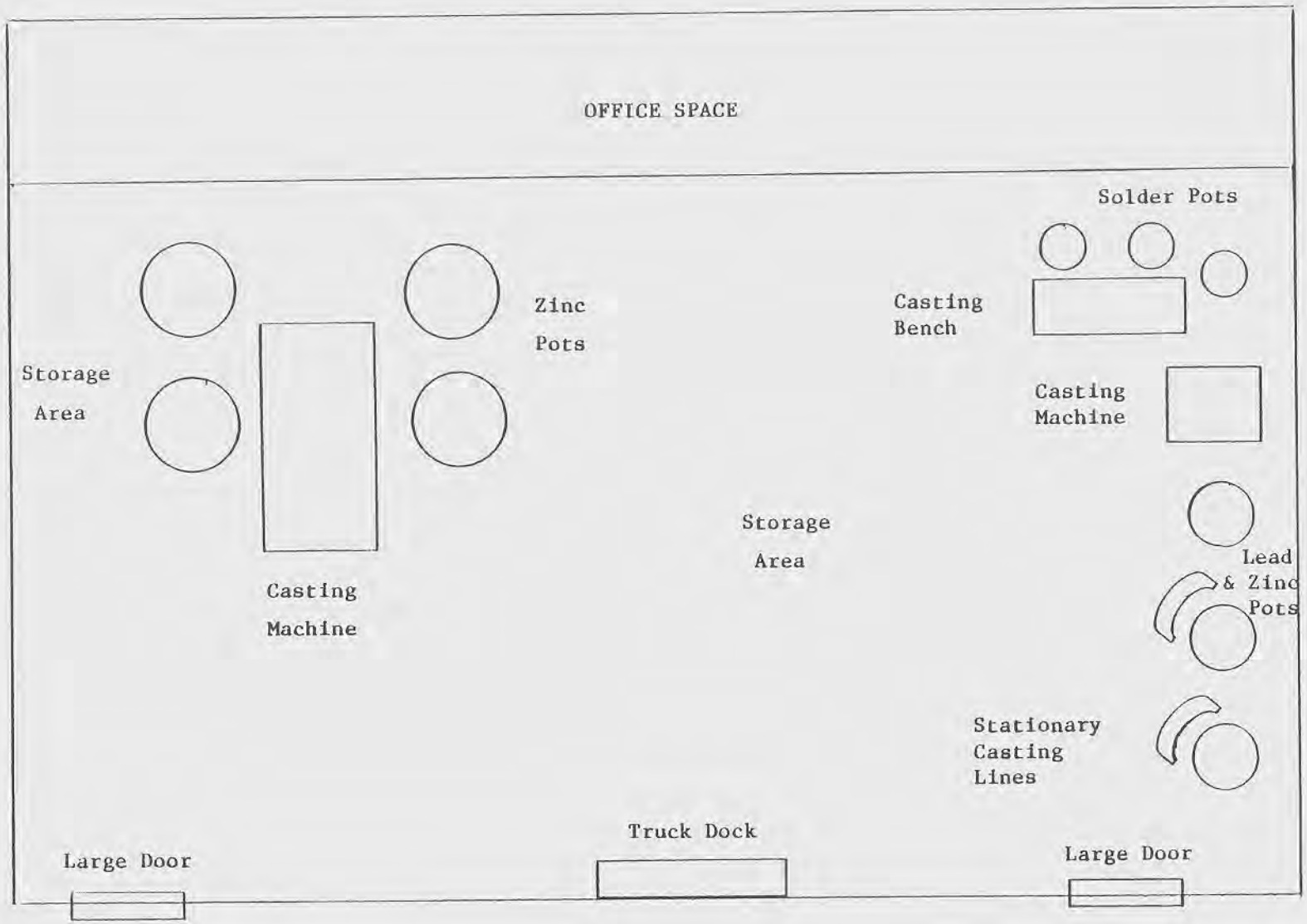

Figure 13. General layout of Smelter 2920.

- o Products (in ingot form)
  - Zinc die cast alloys
  - Hand cast alloys
  - Solder alloys
  - Type metal

ENGINEERING CONTROLS

Engineering controls used to protect workers from hazardous agents are hooding over the lead alloying pots and general ventilation. The workroom atmosphere monitoring data which have been taken indicate that these controls are effective since the exposure to metal fumes is below the permissible exposure limit. Since no emission causing fluxing agents are used at this smelter and the melting operations are performed at temperatures low enough to prevent fuming, no visual observation of control effectiveness can be made. No excessive exposure to heat or noise was observed.

INDUSTRIAL HYGIENE

Measurements

Personal monitors are used to measure potential hazards in the workroom atmosphere. These measurements are taken every 6 to 9 months. The analysis of the samples is performed by an independent laboratory.

Medical monitoring is no longer performed at this smelter.

Personal Protective Equipment and Hygiene

Respiratory Protection--
Respiratory protection is not required.

Other Personal Protective Equipment--
Hard hats, safety gloves, and safety shoes are required and are provided by the company. Work clothing is also supplied by the company.

Lockers and washroom facilities are provided and washing is required before eating. Eating and smoking are not allowed in the workplace.

OBSERVATIONS

Raw Materials Receiving

- o All raw materials, including primary zinc, ingots, and new aluminum scrap, are received by truck.
- o Metal is usually in the form of metric ton bundles or jumbo ingots of approximately a metric ton.

- Propane powered lift trucks are used to unload raw materials.
- The raw materials are stored within the smelter building until needed.

Furnace Area

- The furnace area contains 10 pot type furnaces.
- Three small, 360 kg/day (800 lb/day) pot furnaces are used to melt down solder alloys.
- These furnaces are natural gas-fired and have no temperature control.
- One large pot furnace is used to alloy type metals (9,090 kg) and zinc (5,000 kg).
- The six main zinc pot furnaces have a capacity of 5,000 kg (11,000 lb).
- All of these furnaces are fired using #2 low sulfur fuel oil.
- The pots used for lead alloy production are provided with hoods. These hoods are ducted to the ambient atmosphere. The solder alloy and zinc pots are not provided with hoods.
- An overhead crane is used to charge the four main zinc pots.
- Oxide drosses are sold for reclamation of their metal content.
- Once the desired metal composition has been reached, the alloys are poured into ingot molds.
- The solder alloys are ladled into water cooled molds contained in a stationary casting bench.
- The type metal alloys are electrically pumped into water cooled molds which are contained in stationary semicircles around the pots.
- Zinc alloy ingots are cast using a continuous casting machine which features water cooled molds.
- City water is used on a once-through basis to cool the molds.
- Cooled ingots are removed from the molds and hand stacked onto specially cast ingots with legs, forming pallets.
- Pallets of ingots are moved by lift truck and stored until delivery. Product shipping is done using outside carriers.
- General ventilation for the workroom is provided by open doors in the building and roof vents with fans. In addition, fans are available for localized cooling/ventilation.
- The roof fans are venturi type, 48 inch diameter, operating at 1,140 rpm and are driven by a 3 hp motor. They are rated at 28,600 cfm each.

Housekeeping

- An industrial vacuum machine is used for most cleanup.

- Dry sweeping (using a sweeping compound) is also used.

Laboratory Facilities

- Spark source mass spectrometry is used to analyze the raw material and product metal composition.
- No on-site analysis of the personal monitoring samples is done.

PRELIMINARY SITE VISIT

SMELTER 3027

(Secondary Aluminum Smelter)

SUMMARY

Smelter 3027 is a secondary aluminum smelter which produces aluminum based alloys. The final products are in ingot form. This facility consists of five areas: scrap receiving, sorting, and storage; aluminum cylindrical furnace sweating-reverberatory furnace smelting/refining/alloying; ingot casting; product storage; and air pollution control. Figure 14 shows the general layout of this smelter. The air pollution control scheme used relies primarily on furnace hooding ducted through afterburners and then to baghouses for particulate control. This smelter uses front charged sweating and reverberatory furnaces with hoods over the reverberatory charging wells. The cylindrical sweating furnaces use afterburners on the exit gases to control combustible gases and particulates. These gas streams are then combined with the effluents from the reverberatory furnaces before being sent to the two baghouses.

The furnace operations are not enclosed in any type of building so general ventilation is excellent. No excessive exposure to heat, noise, or fugitive emissions was observed.

GENERAL

For aluminum alloy production, Smelter 3027 uses a cylindrical furnace and a reverberatory furnace. The major raw materials are both new and old aluminum scrap. New scrap is defined as scrap produced during the manufacture of a finished product, i.e., borings, burnings, etc., while old scrap is comprised of worn out, damaged, or obsolete articles. The scrap is received by truck, sorted, and stored in separate areas. Future plans include operation of a rotary dryer with a magnetic separator. This equipment is on-site but is not presently operating.

The sweating operation takes place in cylindrical furnaces. These furnces are gas fired and the burners situated for tangential firing. They are open at the charging end and utilize afterburners to control any combustible gases or particulates in the effluent gas stream. The sweating furnaces are arranged such that the sweated aluminum pours directly into the charging well of the reverberatory smelting furnaces.

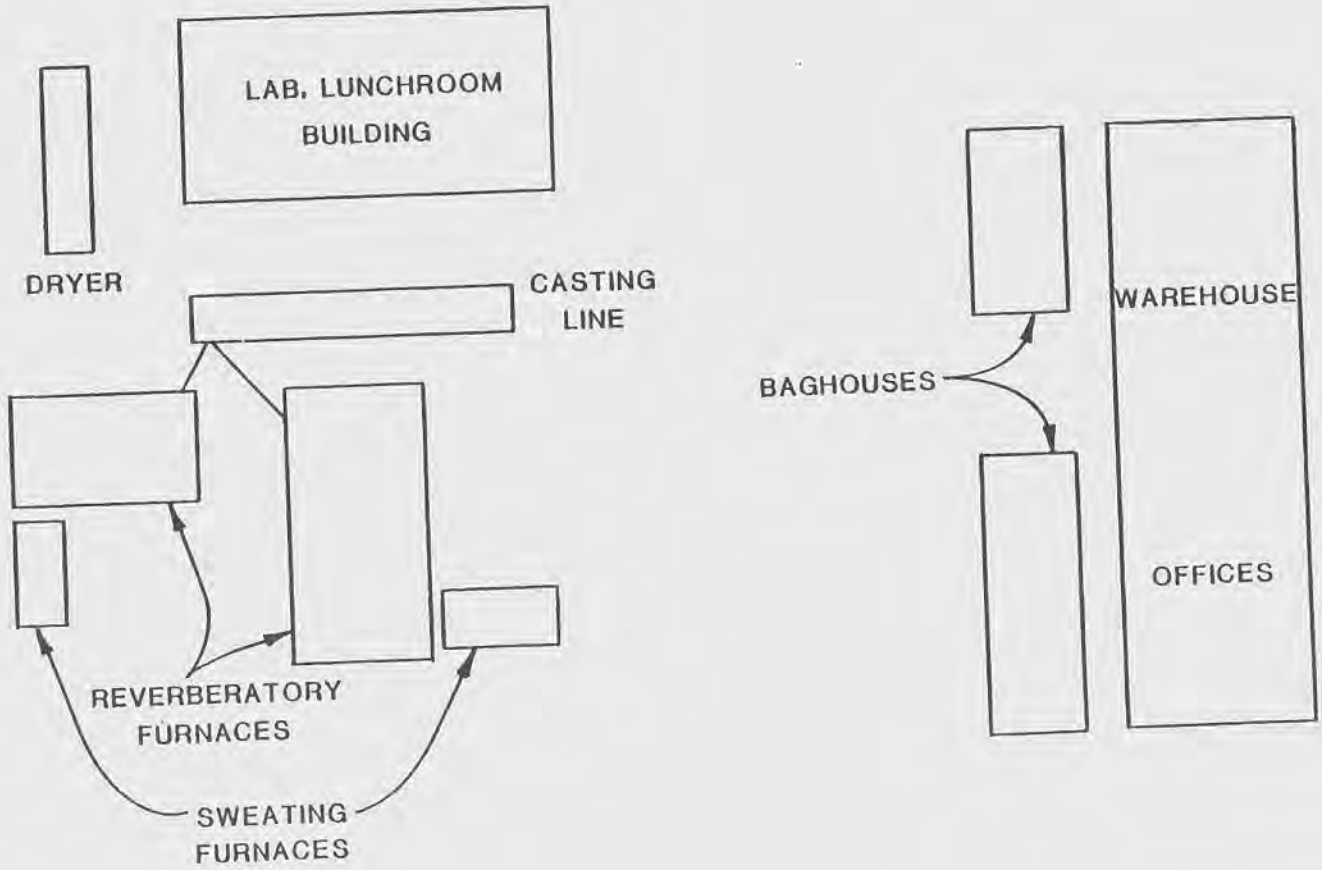

Figure 14. General plant layout.

The smelting operation takes place in a reverberatory furnace. The actual smelting process is a combination of scrap blending and fluxing. The flux used is composed of potash, salt, and cryolite. Once the desired metal composition has been obtained, the aluminum alloy is poured into ingot molds and water or air cooled. The hardened ingots are then loaded onto pallets and stored until delivery.

- o Processes
  - 2 cylindrical aluminum sweating furnaces
  - 2 reverberatory aluminum smelting furnaces
- o Capacity
  - 14 metric ton (30,000 lb) reverberatory furnace
  - 28 metric ton (60,000 lb) reverberatory furnace
- o Employment
  - 24 production workers
- o Age
  - Furnaces are less than 2 years old
- o Raw Materials
  - All types of aluminum scrap
  - Alloying agents, primarily silicon, copper, and zinc
  - Flux, composed of 49 percent salt, 49 percent potash, 2 percent cryolite
- o Products (all in ingot form)
  - Aluminum foundry alloys
  - Aluminum die cast alloys

ENGINEERING CONTROLS

Engineering controls used to limit hazardous exposure include:

- o the hoods and damper system over the charging well of the reverberatory furnaces,
- o the hooding and afterburners on the cylindrical sweating furnaces, and
- o general ventilation around the furnaces.

The hoods over the reverberatory charging wells are ducted into the reverberatory furnace flue. The gas drawn from the charging wells serves to cool down the gases and fumes from the furnace as well as collect any gases and fumes from the charging well. These gases and fumes are then sent to baghouses for control of particulates. The baghouse dusts are disposed of in a landfill.

The hoods over the open front of the cylindrical sweating furnaces are also ducted directly into the reverberatory furnace flue. The gases and fumes from the combustion chamber are sent through an afterburner to control combustible gases and particulates. These gases and particulates are then ducted into the reverberatory furnace flue.

General ventilation around the furnaes is excellent since the furnaces are not located in a building. The open layout of the smelter provides good ventilation and no excessive exposure to heat or noise was observed.

INDUSTRIAL HYGIENE

Measurements

This smelter does not engage in routine air monitoring for the chemical agents found in the workplace.

Personal Protective Equipment and Hygiene

Respiratory Protection::
Respiratory protection is not required in any areas of the smelter. Dust masks are used when cleaning the baghouses.

Other Personal Protection Equipment::
A variety of personal protective equipment is worn throughout the smelter. In general, safety glasses, safety toe shoes, and hard hats are required in most operating areas. In metal pouring areas most employees also wear face shields and spats.

Employee Medical Program

There is no medical program.

OBSERVATIONS

Raw Materials Receiving

- Raw materials are received by truck, separated, and stored outside in separate piles.
- Fork lifts are used to move scrap around and to charge the furnaces.
- A combination of new and old scrap is utilized by the smelter. Borings and turnings are presently used as received although future plans are to use a rotary dryer and magnetic separator to remove oils and also ferrous materials present in this scrap.
- No crushing of material is performed at this smelter.

Furnace Area

- The furnace area consists of two reverberatory smelting furnaces and two cylindrical sweating furnaces. The reverberatory furnaces are of 14 metric ton (30,000 lb) and 28 metric ton (60,000 lb) capacity. These furnaces operate on natural gas. One of the cylindrical sweating furnaces operates on natural gas; the other which is currently under construction will have natural gas or fuel oil capabilities.

Cylindrical Sweating Furnaces

- The cylindrical sweating furnaces are of an open front design. They are charged from the front using forklifts. The front opening is hooded to collect fumes and gases.
- The combustion chamber used two tangential firing burners.
- The gases and fumes from the combustion chamber are sent through an afterburner to control combustible gases and particulates. The gases are then combined with the reverberatory furnace flue gas.
- The sweating furnaces are situated so that the sweated aluminum pours directly from the sweating furnace into the charging wells of the reverberatory furnaces. Figure 15 shows the layout of the sweating furnace.
- A significant amount of noise is produced by the firing mechanism due primarily to the open front of the furnace. However, this noise appears to be excessive only directly in front of the open mouth of the furnace.

Reverberatory Smelting Furnaces

- The reverberatory furnaces are of front feed design. The charging wells are hooded and the gases and fumes are ducted into the combustion chamber flue.
- The reverberatory furnaces are charged using forklifts.
- Charging of the furnaces was not observed so no statements concerning effectiveness can be made.
- The combustion chamber contains roof top burners which are natural gas fired. The fumes and gases are ducted to a baghouse for control of particulates.
- The sweated aluminum from the cylindrical sweating furnaces runs directly into the reverberatory charging wells.
- The actual smelting operation is a combination of scrap blending and fluxing. The flux is bought, premixed, and is composed of 49 percent salt, 49 percent potash, and 2 percent cryolite. Fluorine fluxes are no longer used at this smelter.
- Samples of the melt are taken two to three times per shift and analyzed on site. Standard alloy compositions are produced and cast into ingots.
- Both reverberatory furnaces feed the same casting line. This equipment consists of ingot molds on a continuous chain type arrangement. The ingots are then air cooled with water sprays. The cool ingots which weigh approximately 9 kg (20 lb) are removed at the end of the line and stacked.
- There are no hoods over any of the casting operation. The open layout of the smelter provides for excellent ventilation around the furnaces and casting line.

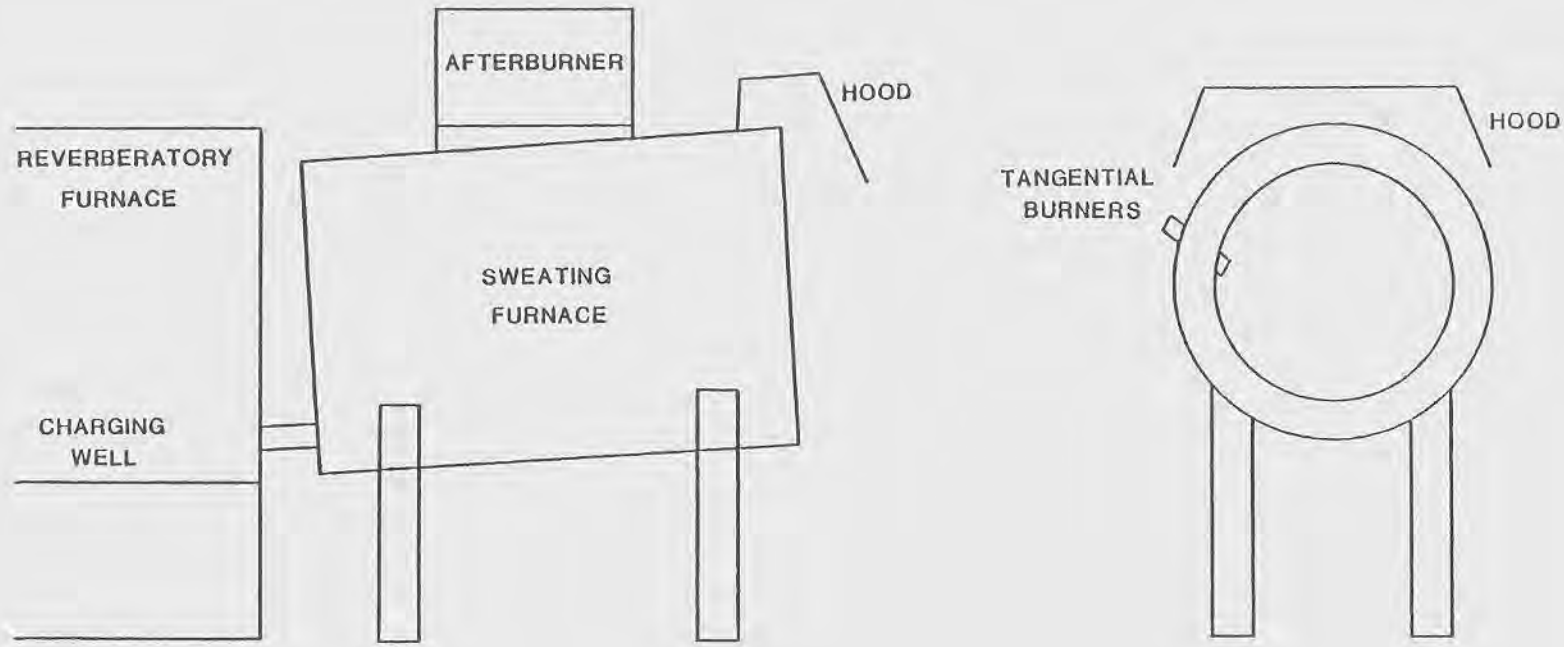

Figure 15. Layout of sweating furnace.

Baghouses and Gas Collection System

- Two baghouses are used for control of particulates from the furnace operations. (See Figure 16 for a general layout of the gas collection system.)
- The baghouse system was down at the time of this visit. Therefore, no statement concerning effectiveness can be made.

Laboratory

- This smelter performs its own analysis of its ingots to determine the composition of the alloys.
- The laboratory facilities were not in use at the time of the visit.

Shipping Area

- Ingots are moved to the warehouse area using forklifts. They are stacked on pallets and shipped out by truck.

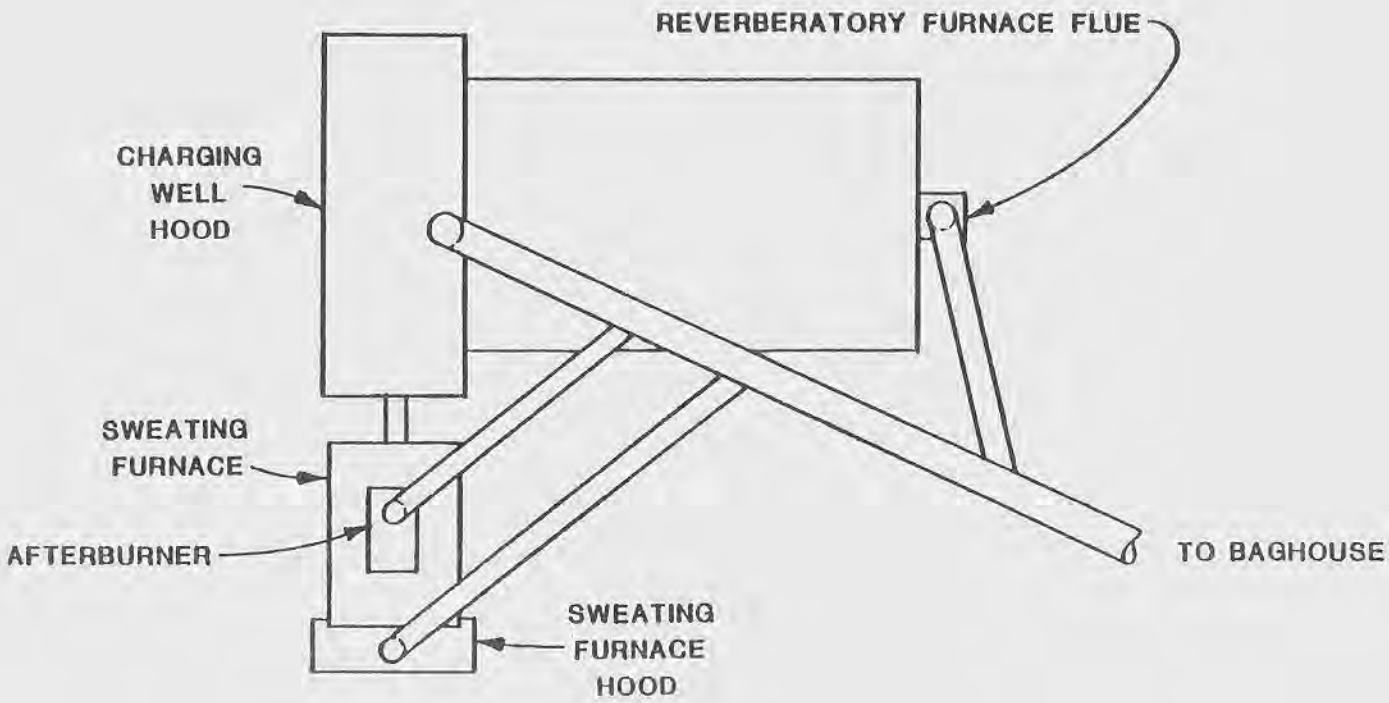

Figure 16. General layout of gas collection system.

PRELIMINARY SITE VISIT

SMELTER 3290

(Secondary Lead Smelter)

SUMMARY

Smelter 3290 is a small secondary lead smelter which produces a variety of finished products in its machine shop and rolling mill and also cast ingots directly from the pot furnaces. The smelter consists primarily of three buildings: the blast furnace/pot furnace rooms; a machine shop; and a rolling mill room. In addition there is an administrative building and a small warehouse.

The primary process ventilation gases were directed to a baghouse. The baghouse system which is the largest single piece of equipment at the plant is very effective and the stack is clear. General ventilation keeps the smelter workroom free from any significant gas or fume concentrations.

Major observations made during the tour of the smelter were: the smelter was very clean and there were no areas where either fume or dust was a significant problem; there were no areas where noise posed a significant hazard; the baghouse dust handling system was effective.

GENERAL

This smelter uses blast furnace smelting and pot furnace refining/alloying to produce a variety of products. The basic raw material used is battery plates. The plates are bought from scrap dealers and have been separated from most of the other battery components. There are no battery breaking facilitiss at the smelter. The blast furnace is charged with battery plates, coke, scrap iron, and baghouse dust. Each of these raw materials is weighed and loaded into a clamshell bucket. The clamshell bucket cannot open to dump the load until it is setting on the top of the blast furnace. Air is blown through tuyeres located at the bottom of the furnace, and the molten hard (antimonial) lead product is continuously drawn off and cast into ingots.

The ingots produced in the blast furnace process can be either sold as product, refined, or alloyed for use in other products. The refining or alloying takes place in three natural gas-fired pot furnaces. In these furnaces the hard lead is melted, alloying and/or refining agents added, and the product cast into ingots. These ingots can be sold directly or used to produce

final products in the machine shop/rolling mill which are located on site.

- o Processes
  - Blast furnace
  - 3 refining/alloying pot furnaces
- o Capacity
  - 32-36 metric tons (35-40 tons) lead/day
- o Employment
  - Approximately 30 production workers
- o Age
  - Built approximately 1932
- o Raw Materials
  - Battery plates bought from scrap dealers, precrushed
  - Scrap iron bought from scrap dealers, precrushed
  - Coke
  - Tin, for solder production
- o Products
  - Grid metal for battery plates
  - Solder
  - Sheet lead
  - Ingot lead
  - Assorted lead building products, e.g., flashings, sewer connections
  - Specialty products such as nuclear reactor control rods

ENGINEERING CONTROLS

Several engineering controls used to limit hazardous exposure are the blast furnace hooding at the furnace top and tapping ports, the baghouse dust handling system, the blast furnace charging system, and the general building ventilation and housekeeping. These controls are effective and the plant is currently in compliance with OSHA regulations. The baghouse dusts are recycled to the blast furnace using a screw conveyor to transport the dust to covered pans. These pans are transported using an overhead conveyor which allows the pans to be dumped into a storage hopper. From this hopper, the dust is metered into the blast furnace charge buckets and recycled. The use of these automated charge buckets eliminates the need for workers at the top of the blast furnace. The enclosed dust conveying system minimizes the fugitive dust problem by virtually eliminating exposure of the dust to the workroom air. Storage of the dust in closed hoppers also reduces the fugitive dust problems.

Three Tenant® sweepers are used to clean most areas of the smelter, including the rolling mill and warehouse. These sweepers combined with general ventilation effectively minimize fugitive dust problems. Several large doors allow fresh air to circulate freely. Visibility in all areas was excellent and no excessive exposure to heat, gas, or particulate matter was

observed. This combination of housekeeping and general ventilation seems necessary at all smelters to maintain a clean work environment.

INDUSTRIAL HYGIENE

Measurements and Monitoring

Similar to the program used by Smelter 2780.

Personal Protective Equipment and Safety

- Safety helmets: worn in all parts of the smelter and fabrication areas.
- Face shields: worn in hot metal areas.
- Respirators: worn in scrap lead handling and smelter areas; worn by some workers in fabrication shop and rolling mill.
- Written safety and work rules.

OBSERVATIONS

Raw Materials Handling

- Battery plates, coke, and scrap iron were stored in open piles.
- Battery plates were moved around the smelter using a front-end loader.

Blast Furnace

- Primary hooding located above the top opening and hooding over the tapping ports were effective in limiting fume and particulate emissions.
- Blast furnace was small, occupying a space approximately 3m x 3m and about 5m in height (10'x10'x16').
- Clamshell bucket charging system reduced worker exposure at the top of the blast furnace.
- Screw conveying of baghouse dusts to covered pans and subsequent storage in closed hoppers (before use) limited the amounts of dust open to the atmosphere.
- Respirators were worn by personnel loading the charging bucket and tapping the slag.
- Hard lead product was poured into ingots continuously.
- Heat and noise levels were not excessive.

Pot Furnaces

- Three pot furnaces were used for alloying and refining the hard lead ingots from the blast furnace.
- Adequate ventilation was provided by open doors on both sides of the building.

- The floor was kept essentially dust free by the use of Tenant® sweepers.
- Wet sweeping also helped minimize dust levels.

Mill and Fabrication Shop

- Noise levels were not excessive and visibility was excellent.
- Safety helmets were worn in these areas.
- Sweeping minimized dust problems.
- Many building products such as flashings as well as sheet and solder were produced.
- In the rolling mill, lead was cast into 0.15m (6" thick), 6,800 kg (15,000 lb) slabs.
- The 0.15m slabs were first rolled to a 13 mm (1/2" thickness) and then to the final product thickness desired.
- In the fabrication shop, machines were used to draw solder, stamp flashings, and produce other specialty products.
- Specialty products included control rods for nuclear reactors.

Housekeeping

- Tenant® sweepers were used throughout the plant and appeared to be effective in minimizing dust levels.
- Wetting of parts of the smelter also reduced dust levels.

PRELIMINARY SITE VISIT

SMELTER 5000

(Secondary Lead Smelter)

SUMMARY

Smelter 5000 is a secondary lead and aluminum smelter in Canada. It produces a variety of aluminum, lead, and lead alloy ingots, but has no fabricating facilities. The aluminum smelting operation runs intermittently and constitutes a small part of the smelter's business. For this reason no emphasis was placed on the secondary aluminum portion of the plant. The lead smelter consists of four areas: spent battery crushing and storage; refining, alloying, and casting which take place in rotary, kettle, and reverberatory furnaces; product storage; and pollution control, both air and water. The aluminum production area is housed in the same building as the lead furnaces. In addition, there is an administrative building which also houses the lunchroom, changerooms, and showers.

The process ventilation gases from the rotary furnaces, kettles, and reverberatory furnaces are treated in one baghouse. The baghouse appears to be effective and the stack is clear. The gases from the battery breaking operation are sent to a scrubber before exiting via the stack. General ventilation for the furnace room is provided by large open doors and roof monitors with fans. Future plans are to duct these roof monitors and fans to a separate baghouse.

Smelter 5000 is in compliance with the regulations set forth by the Ontario Provincial Ministry of Health except for the battery breaker area and the rotary furnace area during tapping.

GENERAL

For lead production, Smelter 5000 uses rotary and reverberatory furnace smelting and kettle refining/alloying to produce a variety of lead ingots. The basic raw material for the smelter is battery plates. Smelter 5000 buys both precrushed battery scrap and whole spent batteries from scrap dealers. The scrap is brought in by truck (rail facilities are available also) and dumped in an open storage area. The batteries are then crushed in the open by a bulldozer and the acid drained off. The crushed batteries are then sent to the battery breaker where the lead scrap is removed from the plastic or bakelite cases. Future plans are to enclose the unloading, battery crushing, and storage areas in one building.

The cleaned led scrap is combined with fine anthracite coal, caustic soda or sodium carbonate, and cast iron borings for feed to the rotary furnace. The furnace charge is stored in buckets until needed. The charging machine for the rotary furnace has a trough into which the charge is poured. The trough is then pushed into the furnace by a hydraulic ram. When the trough is all the way in the furnace, the trough is turned over and the charge dumped into the furnace. The rotary furnaces are tapped intermittently. The lead product is allowed to cool in hemispherical molds and is stored until needed for the kettles.

The kettles are charged by using overhead cranes with umbilical controls. The product from the rotary furnace is fed cold to the kettle along with the necessary alloying agents. To produce hard lead, antimony is added as the alloying agent. The refined/alloyed hard lead is then pumped to a hard lead kettle which feeds the ingot casting system. For soft lead production, oxygen is used in the kettles to remove antimony. This lead is then fed to a reverberatory furnace for further refining. The soft or pure lead is then pumped to a soft lead kettle which also feeds the ingot casting system. This system casts 27 kg (60 lb) ingots. In addition to the soft and hard lead production, a small kettle furnace is used to produce alloying agents used for master alloying.

Solder is produced in separate kettles by alloying lead and tin and is automatically cast into 45 kg (10 lb) ingots. The casting machine is an endless belt system with water cooled molds. The molds are filled with solder and travel down the line. By the time they reach the end of the line, the ingots have solidified and are removed from the molds and stacked by hand. The molds then continue around the end of the line to be refilled. In all cases, the final product of Smelter 5000 is in ingot form.

- o Processes
  - 3 rotary furnaces
  - 6 refining alloying kettles
  - 2 reverberatory furnaces
  - 1 small alloying furnace
- o Capacity
  - Proprietary
- o Employment
  - Approximately 35 production workers
- o Age
  - Built approximately 1947
- o Raw Materials
  - Batteries (whole)
  - Batteries (precrushed)
  - Scrap iron
  - Anthracite coal
  - Caustic soda/sodium carbonate
  - Tin

- Arsenic
- Cadmium
- Scrap aluminum

o Products (all in ingot form)
- Grid metal for battery plates
- Soft lead
- Hard lead
- Solder
- Various master alloys
- Aluminum

ENGINEERING CONTROLS

Engineering controls used to limit hazardous exposure include:

o automated charging of the rotary furnaces
o general hooding and ventilation used throughout the plant.

The charging machine for the rotary furnaces consists of a track-mounted, trough-shaped hopper and hydraulic ram which can be moved to facilitate charging all the furnaces with the one machine. This charging machine is hooded and as the machine is positioned in front of a furnace, the machine's hood taps into the furnace exhaust ventilation system. This system eliminates the need for an operator to manually charge the furnaces, minimizing worker exposure to fumes and gases.

The hooding and general ventilation were the major engineering controls for both gaseous and particulate material. The primary hooding and associated dry gas cleaning equipment remove gaseous and particulate emissions from the rotary, reverberatory, and kettle furnace area. All furnaces are hooded with the exception of the holding kettles for the casting operations. The emissions from the battery breaker are processed through a scrubber before exiting via the stack.

Smelter 5000 uses one Tenant® sweeper to clean most open areas of the smelter around the buildings. This sweeping, combined with general ventilation and elimination of truck traffic in the general yard area, attempts to minimize fugitive dust problems. Several large doors in the furnace building allow fresh air to circulate freely. Visibility in all areas was good and no excessive exposure to heat was observed. However, exposure to gas and particulate matter is a recognized problem, and efforts are underway to minimize this exposure. Control measures to be implemented are noted in the Observations section of this report.

INDUSTRIAL HYGIENE

Measurements and Monitoring

Blood Lead Monitoring--
As required by the Ministry of Health of the provincial government, each month samples of employees' blood are drawn and analyzed for lead. Sixty ug Pb/100 g whole blood is used as an indicator which may precipitate rotation of an employee to a less contaminated work area or closer medical supervision. A physician is at the plant four hours each week.

Lead-in-Air Monitoring--
The company does not perform any lead-in-air monitoring. The Ministry of Health of the provincial government performs air monitoring at the plant twice each year. To date, air samples have bene collected using high volume impinger samplers. Approximately 40 locations within the plant are sampled during each inspection wtih sampling times ranging from 3 to 20 minutes. Frequently, sampling times are selected to depict worst case situations. The data which have been gathered to date are not expected to be useful in characterizing control effectiveness or employee exposures. Reportedly, the Ministry of Health is starting to use personal monitoring equipment; however, the equipment is carried by the inspector and not worn by the employee.

Other Air Contaminant Monitoring--
The Ministry of Health has also made measurements for arsenic and cadmium.

Availability of Industrial Hygiene Data--
Lead-in-blood and air contaminant concentration data have been requested from the Ontario Ministry of Health.

Personal Protective Equipment and Safety

Respiratory Protection--
Three respirators are issued to each employee. Respirator use is required in the dusty areas of the plant. Employees are rotated in and out of dusty areas on a weekly basis. Respirators are turned in each night and a clean one (identified with the employee's name) picked up each morning. Dirty respirators are washed, inspected, repaired, fitted with new cartridges, and sealed in plastic bags until their next use. The Welsh Model 7500 dual cartridge half-face piece respirator is being used with cartridges for use against acid mist and particulates.

Other Personal Protective Equipment--
- The company provides safety toe shoes to all employees.
- Hardhats are required in all areas.
- Safety glasses are required in some areas.
- Clean work clothing is provided to workers every other day.

Lockers, Showers, and Changeroom Facilities--

- o Separate rooms and lockers are provided for changing and storing work clothing and street clothing.
- o Employees change out of work clothing, shower, and put on street clothing before going home.
- o Shower and changerooms were clean and provided with heated and filtered air.

Lunchroom--

- o A lunchroom with adjacent handwashing facilities is provided for plant employees.
- o Employees wash their hands and leave their respirators in the washroom before eating.
- o Ventilation air for the lunchroom and washroom is heated and filtered.
- o Smoking and eating in the workplace is prohibited; however, the company commented that this was difficult to enforce.

OBSERVATIONS

Raw Materials Handling

Scrap Receiving--

- o Scrap batteries are trucked in, weighed, and dumped into an open yard area. The yard area is fenced and paved. The paving is sloped so that rainwater runoff and electyrolyte from the batteries collect in one stream which is processed through the wastewater treatment plant. The yard fence is formed by a solid concrete wall on top of which is a sheet metal fence. The total height of the fence is approximately 3.5 - 4.5 meters (12-15 feet).
- o Scrap batteries are crushed by running over them with a track-type bucket loader. The bucket loader is not equipped with a filtered-air cab. As the bucket loader crushes the battery cases, the acid drains toward the water treatment plant.
- o Drosses are received by truck and dumped into holding areas separated by concrete walls. These holding areas are across the yard from the battery dumping station.
- o During the walk-through of the yard area, small dust devils were observed to whip dust high in the air. The electrolyte escaping from the crushed batteries effectively wetted only a portion of the yard area.

Crushed Battery Storage--

- o After batteries have been crushed and the acid drained in the yard area, they are moved to a large enclosed building and stockpiled until processing through the breaker.
- o A rubber-tired bucket loader equipped with a filtered-air cab is used to move the crushed batteries into the storage building and to load the battery breaker.

- The "wet floor" control technique is used to some extent in this area to help control dust.
- The plant considers this work area one of the "dusty" areas and required that the bucket loader operator wear a respirator at all times.
- Future plans are to enclose the unloading, crushing, and storage areas in one building.

Battery or Scrap Breaking--

- The breaking equipment used at the plant is considered proprietary. The equipment accepts crushed batteries; separates and washes battery casing and plant separating materials; and breaks plates, terminals, etc., for charging into the melting furnaces.
- Washed battery casing and plant separating materials are sent to a sanitary landfill for disposal.
- Fans supply 7.6 m^3/s (16,000 cfm) of ventilation into the crusher building, providing positive pressure.
- The gases from the breaker area are sent to a scrubber designed to treat 4.8 m^3/s (10,000 cfm).
- Respirators are required in this area.
- The battery breaking operation is not continuous and usually operates only 3 to 4 months each year corresponding to the seasonal recycling of junk batteries. When in operation the breaker runs continuously requiring approximately three men per shift for three 8-hour shifts.
- This equipment was not operating at the time of our visit.

Charge Preparation--

- Broken lead scrap is loaded into small hoppers which are moved using forklift trucks. The hoppers are further filled with anthracite screens, cast iron borings, sodium carbonate or caustic soda, and sometimes boric acid.
- Hoppers are stockpiled in the building housing the melting furnaces. They are moved to the furnace charger using a forklift.

Main Production Building

General Comments--

- The following operations are all contained within the same building: rotary furnaces; drossing or refining kettles; reverberatory furnaces; master alloy crucible; ingot casting; solder manufacturing; and product warehouse.
- Aside from the local exhaust ventilation system serving these various operations, there is no mechanical ventilation system or roof monitor gravity ventilation system.
- The existing exhaust ventilation system moves approximately 38-42 m^3/s (80-90,000 cfm) and requires extensive use of dampers for optimum operation.
- The ductwork for the system is located approximately 6 meters (20 feet) above the floor and makes horizontal runs

of several hundred meters before reaching the baghouse. Settled dust accumulation in the ductwork is a recognized problem.

- A new 14 m^3/s (30,000 cfm) exhaust system with baghouse will be installed which will serve primarily the rotary furnace tapping operation.

Furnace Charging--

- The rotary furnaces are charged using a track-mounted charge elevator and ram which can be positioned in front of each furnace.
- The charging machine is hooded and is connected to a plenum. As the charging machine is positioned in front of a furnace, the hood ductwork taps into the exhaust plenum. Dampers activated by the charging machine prevent air inlet into the plenum at other positions along the charging line.
- Furnaces operate on an 8-hour cycle and charging was not observed during the walk-through.

Rotary Furnaces--

- The capacity of the three rotary furnaces used at the smelter was considered proprietary.
- The furnaces were fired using No. 2 fuel oil. The firing mechanisms generated significant levels of noise which could result in excessive exposure to noise of employees working full time in the furnace area.
- Each of the rotary furnaces is local exhaust ventilated. Their ventilation ties into the same ductwork serving the charging machine.
- The hoods for the furnaces are dampered so that the exhaust system can be made to serve only the operating furnaces.
- Observation of the operating furnaces indicated that under melting conditions, the exhaust system appeared to be controlling routine furnace emissions.
- One of the furnaces was down for repair during our visit. The furnace chamber was stood vertically on end so that old refractories could be removed and new ones installed.
- Actual repair work was not observed.
- These furnaces run continuously with approximately three men/shift for three 8-hour shifts.

Furnace Tapping--

- Furnaces are tapped from the opposite end of charging into small hemispherical pots which are placed under the tapping spouts. As the pots are filled, they are removed to stand in areas adjacent to the furnaces. The tapping locations are hooded, again using a dampered system of ductwork which ties into the main exhaust system. Tapping was not observed during the walk-through.
- Respirators are required in this area during furnace tapping.

- The company has plans to add additional exhaust capacity to this general work area to handle excessive emissions during tapping. Ventilation will take the form of fans located in the roof which will exhaust to a new baghouse. The new baghouse will handle emissions from the furnace area freeing some of the capacity of the existing system to better serve some other operations.

Drossing Kettles--

- The small pots holding the molten lead are emptied into one of two drossing kettles. The kettles are hooded with the exhaust ductwork turning down and traveling below floor level to join the plenums serving the rotary furnaces. The below-floor ductwork requires cleanout several times each year.
- The kettle hoods can enclose the entire kettle. Sections of the side and top of the hood are movable so they can be rolled back during charging and dross removal.
- Oxygen is injected into the kettles to reduce the antimony content of the lead.
- Metallic arsenic and arsenic trioxide are added to the kettles to facilitate tin removal.
- The kettles are agitated using electrically driven propellers which are suspended and removed by crane.
- Drosses removed from the kettles are considered to be of low hazard and are shipped to a sanitary landfill for disposal. As the skimmings are removed from the kettles, they fall into containers which are hooded and connected to the same system serving the kettles.
- The kettles, like the rotary furnaces, are fired using No. 2 fuel oil. The kettle-firing mechanisms did not appear to present a significant noise hazard.
- Respirators are required in this area.
- The kettles operate approximately 8 hours/day with four men per shift.

Reverberatory Furnaces--

- Two reverberatory furnaces are also used in lead refining at this smelter. These furnaces are used only intermittently (approximately 8 hours/week) and were not operating at the time of the walk-through survey. They are served by the same exhaust system which connects to the rotary furnaces and drossing kettles. No statement can be made regarding the control effectiveness of the hoods for these furnaces.
- Respirators are required in this area.

Specialty Alloys--

- When special lead alloys are required, a master alloy crucible is used to make ingots to be fed into the main melt.

- The alloy crucible is hooded and has its own ventilation system.
- The alloy crucible was not in operation at the time of the visit so no statement regarding control effectiveness can be made.

Ingot Casting--

- Two holding kettles are found adjacent to the casting wheel. Neither kettle is hooded.
- No additives are introduced to these kettles. They simply keep the metal warm until it is pumped into molds. Manual skimming is performed periodically.
- Nitrogen is injected into the kettles to improve elimination of impurities.
- One kettle is used for antimonial or "hard" lead and one for pure or "soft" lead.
- Both kettles share the same ingot casting wheel. The casting wheel is not ventilated.
- Lead is cast into 27 kg (60 lb) ingots which are mechanically stacked into "bundles" that are moved by forklift into the product warehouse.
- The casting operation runs concurrently with the drossing kettle operation, requiring approximately three men for one shift. These employees also run the solder casting operation.

Solder Production--

- Adjacent to the lead casting area is the solder formulating and casting area.
- Solder is made from refined lead and specialty drosses which introduce most of the required tin.
- The solder is melted in an oil-fired kettle, and the molten solder is pumped to an adjacent casting line where it is cast into 4.5 kg (10 lb) ingots.
- The ingot molds are water cooled and the solder ingots are hand stacked.

Product Warehouse--

- Finished bundles of ingots are moved to the product warehouse by forklift trucks.
- Bundles are strapped and encased in a plastic bag.

Pollution Control Equipment

Wastewater Treatment--

- Water draining from the crushed batteries in the yard area and from other areas within the plant is channeled to the treatment plant where it is filtered, neutralized with sodium carbonate and held in lined retention ponds before its release into the sanitary sewer system.
- The treatment plant requires only intermittent attention from plant employees.

Baghouse--

- A 14-unit Wheelabrator baghouse is used to serve the main exhaust system.
- Two fans are used in the ventilation system, each designed for 65 percent capacity.
- Baghouse dust, deposited into closed tote boxes, is combined with the paste from the crusher and charged into the rotary furnaces.
- A small rotary agglomeration furnace will be installed to agglomerate the baghouse dust into large particles to ease handling and reduce the dust hazard.
- The low temperature agglomeration furnace will be fed by a screw conveyor from the baghouse.
- The agglomeration furnace will melt the $PbCL_2$ contained in the dust which will cause the required agglomeration.
- Respirators are required during repair.

Housekeeping--

- Dust was observed on the floors in all work areas.
- A dry, mechanical Tenant® sweeper is used to clean work areas and yard areas.
- Dry sweeping is discouraged but still performed in some areas.
- No central vacuum system is used for housekeeping.
- A major advance in housekeeping was made when the 18-wheel scrap delivery trucks were excluded from entering the general yard area.
- Forklift trucks continue to spread and stir up settled dust.

SECTION 5

IN-DEPTH SURVEYS

In-depth surveys were conducted to study 12 processes at 6 secondary nonferrous smelters. Table 6 summarizes the processes studied and the engineering control schemes employed.

In-depth survey reports were prepared for each process. These reports provide a detailed description of the process with engineering drawings, a discussion of the potential emissions and their source, a description of the engineering control scheme used to reduce worker exposure, and an engineering control evaluation. The engineering control evaluation includes sections on engineering measurements taken, visual observations performed, air sampling information, and a control critique. A general section on personal protective equipment, other hazards, and general hygiene considerations is also included.

Table 6. Summary of In-Depth Surveys

Smelter	Process Studied	Engineering Control Scheme Evaluated
2295	Scrap briquetting; copper, brass, bronze	Local exhaust ventilation
2295	Reverberatory furnace smelting; copper, brass, bronze	Local exhaust ventilation for charging and pouring systems
2295	Rotary furnace smelting, copper, brass, bronze	Local exhaust ventilation of tapping/ pouring and charging systems; supplied air island system
1800	Hammermill scrap reduction; aluminum	Noise control enclosure
1205	Rotary furnace smelting; copper, brass, bronze	Local exhaust ventilation for tapping and casting ladle systems
Bergsoe	Shaft furnace smelting; lead	Local exhaust ventilation for slag tapping, bullion tapping, and tuyere systems, charging area isolation ventilation
Bergsoe	Flue dust agglomeration; lead	Local exhaust ventilation (this process is actually a control technique used to reduce exposure due to flue dust
Bergsoe	Rotary furnace smelting; lead	Local exhaust ventilation for charging/ pouring, hot flue gas, and cooling ladle systems; charge preparation isolation
Bergsoe	Induction furnace melting; copper	Louvre local exhaust hoods
2920	Pot furnace alloying; lead/zinc	Local exhaust and general dilution ventilation
2920	Pot furnace alloying; zinc/aluminum	
1300	Batter breaking/plate separation; lead	Isolation of process

IN-DEPTH SURVEY I

SMELTER 2295

(Secondary Brass and Bronze)

INTRODUCTION

The objectives of this in-depth study were as follows:

- To describe the processes and operations of interest with an occupational health engineering discussion concerning the hazards and potential exposures associated with these processes.
- To describe and evaluate the engineering controls used to minimize worker exposure to the hazards and potential exposures identified.

Smelter 2295 is primarily a secondary copper smelter with much smaller quantities of zinc and lead alloys also being produced. Three processes associated with copper alloy production were selected for study at this smelter. They are scrap briquetting, reverberatory furnace smelting, and rotary furnace smelting. Each of these processes is provided with significant engineering controls.

Copper alloy production operations are housed in several buildings. The scrap briquetting operation is located in the corner of a relatively new raw materials receiving warehouse. Figure 17 shows the approximate location of the scrap briquetting operation in the corner of the warehouse.

The reverberatory and rotary furnaces evaluated during this study are located in a furnace building which also contains other similar furnaces. Figure 18 shows the approximate locations of the two furnaces inside the furnace building together with locations of major doors for materials flow and axial roof fans to provide dilution ventilation.

The furnace building consists of four bays delineated only by repeat in the roof profile. Axial exhaust fans are provided at several locations in the roof to remove heat, steam, and fugitive emissions from furnaces and associated smelting equipment.

PROCESS STUDIES

Each of the controls identified in the introduction was studied and reported separately. General comments, applicable to all controls, are incorporated into a separate section.

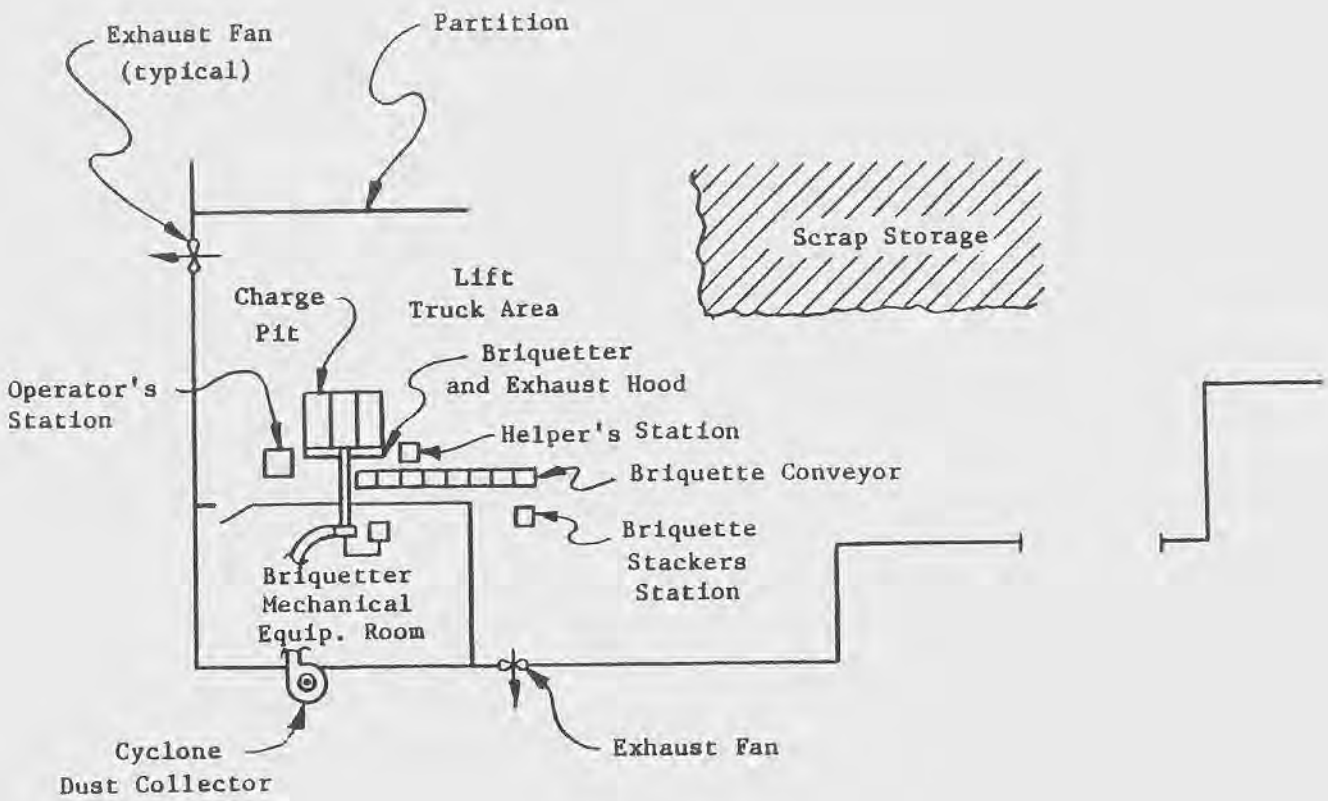

Figure 17. Location of scrap briquetter in corner of raw materials warehouse.

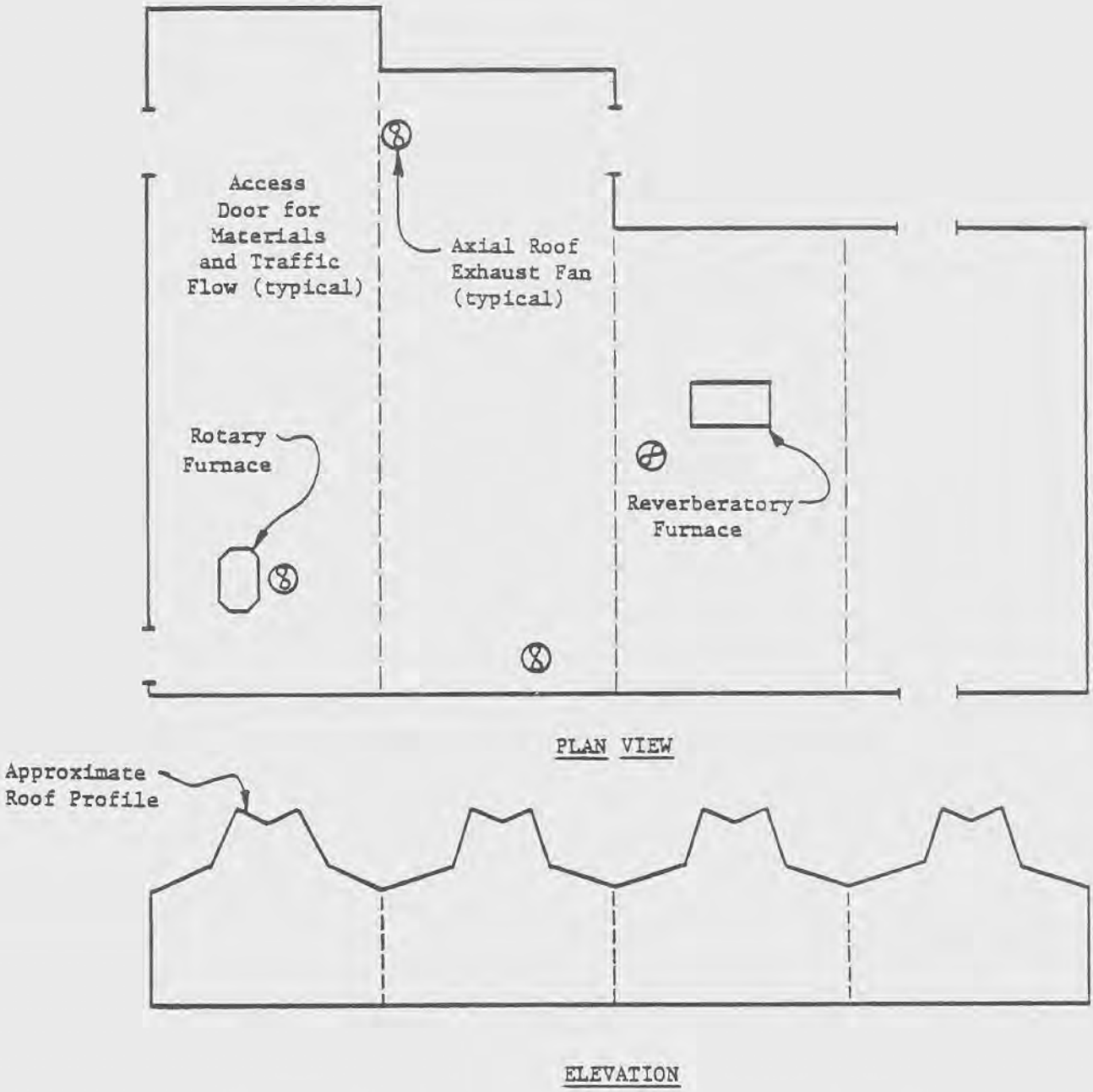

Figure 18. Furnace building, Smelter 2295.

SCRAP BRIQUETTING

Equipment and Controls

Process Equipment--
The process equipment studied consists of a hydraulically operated ram-type briquetting machine as shown in Figure 19. The machine is installed below floor level with the feed area located at floor level. The scrap to be briquetted is manually pushed into the charging pit area of the machine, the hydraulic ram is used to compress the material into an approximately 0.03 m^3 (1 ft^3) briquette, and the briquette is pushed out of the machine by another ram. The briquettes are then stacked on a pallet.

This machine is provided with a control system to collect dust produced during the briquetting operation. This system consists of a long narrow hood located at the back of the charging pit. This hood is ducted to a fan which feeds a cyclone dust collector located outside the building. The exit from the cyclone is ducted up to the roof of the building where it is exhausted to the ambient atmosphere.

The briquetting machine does not operate at all times. It operates when scrap needs to be briquetted for a particular furnace charge or when there is a need to reduce the volume of scrap in-house. It is normally operated a maximum of one 8-hour shift per day. The types of scrap which are fed to the briquetting machine include automobile radiators, wire, tubing, turnings, and pipe.

Equipment Operation--
A crew of four works at the briquetting machine when it is operating which is typically for an 8-hour shift. This crew consists of an operator and helper, both of whom are positioned next to the charging pit, a briquette handler who is positioned away from the charging area and a lift truck operator who brings the scrap to the charging area. These work stations are shown in Figures 17 and 20.

Emission Sources and Potential Exposures

The primary hazard resulting from the briquetting operation is employee exposure to dusts containing lead, copper, zinc, etc. The control system for the briquetting machine is designed to control the emissions produced during the actual briquetting process. There are other potential sources of emissions which this control system will have minimal, if any, affect on. These emissions occur primarily when the scrap is dumped at the charging area by the lift truck and is then manually separated to charge the machine. The dust produced during these phases of the operation is not influenced by the control system. The only control for these emissions is general ventilation provided by axial wall fans.

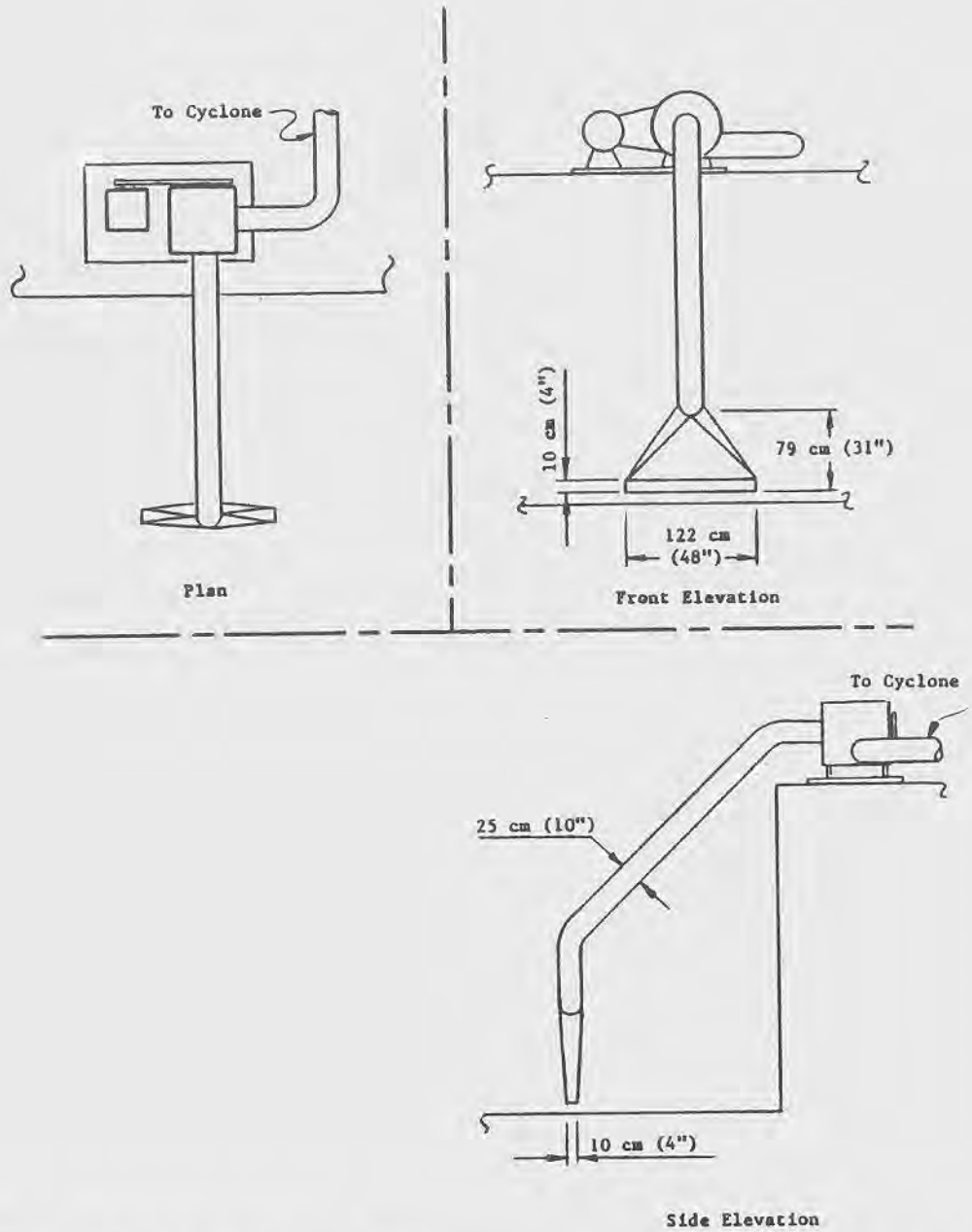

Figure 19. Multiple views: briquetting machine control system.

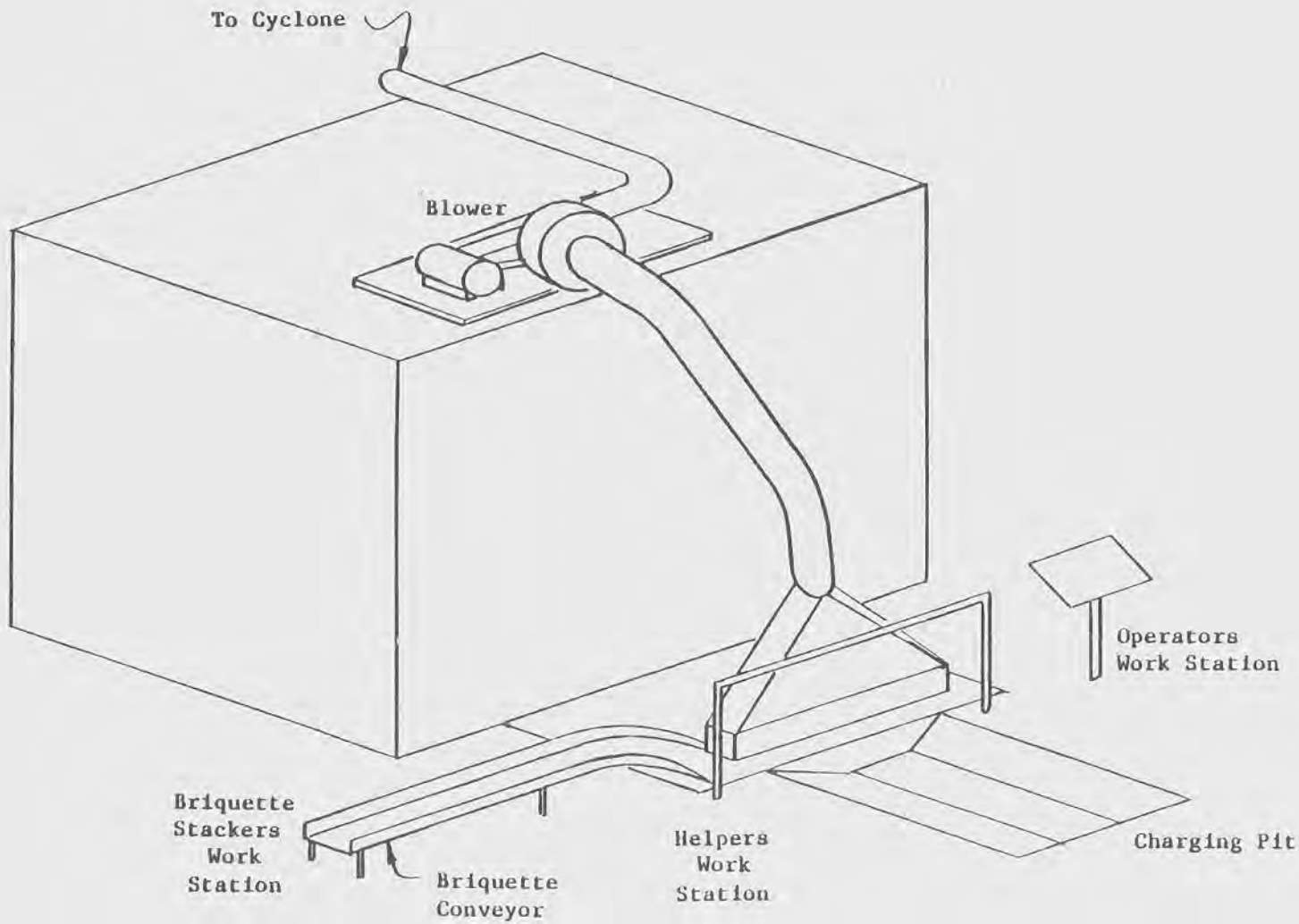

Figure 20. Relationship of control system to other structures and employee work areas.

Other relatively uncontrolled emissions occur when the scrap is moved into the actual charging pit. These emissions are controlled to some extent by the control system, but there is insufficient air captured by the hood to affect the entire charging pit. Again, the primary control for these emissions is general ventilation. The emissions produced during the actual briquetting process are controlled by the hood and ductwork associated with the machine. All of these emissions contribute primarily to the exposure of the machine operator and helper.

Engineering Control Evaluation

Engineering controls on the briquetting machine were evaluated using three basic types of information: engineering measurements and design considerations, observations, and air sampling data.

Engineering Measurements--

The engineering control system for the briquetting machine is shown in Figures 19 and 20. This system is designed to move 1.25 m^3/s (2,659 cfm) of air at a pressure drop of 12.7 cm H_2 (5 in. H_2). The blower is 43 cm (17") in diameter and is powered by a 5.6 KW (7 1/2 HP) motor running at 1,745 revolutions per minute (rpm). The blower is designed to operate at 2,238 rpm.

Air velocity measurements were made at the face of the hood and at locations away from the hood. Several measurements were taken along the hood as shown in Figure 21. In every case air flow was into the hood. At the face of the hood, air velocities ranged from 3.56 to 4.83 m/s (700-950 fpm). At a distance of 15 cm (6") the velocities dropped to 1.27 to 1.52 m/s (250-300 fpm) and at 30 cm (12") ranged from 0.25 to 0.51 m/s (50-100 fpm).

Observations--

Visual observation of the briquetting operation indicates that the control system effectively captured dust during the actual volume reduction stage of the operation. However, the dusts produced when scrap was dumped by the forklift in the charging area and when the scrap was manually loaded into the charging well were not effectively controlled. These emissions were dispersed into the work area by the general ventilation which wall fans provided.

Air Sampling--

A limited amount of air sampling data was taken to determine the worker's exposure at the work station. Personal monitoring of the machine operator was performed for two consecutive days. The engineering control system was operated continuously during these sampling periods. The results of this sampling are presented in Table 7. Samples were collected on membrane filters with 0.8u pore size and were analyzed by atomic absorption spectrophotometry.

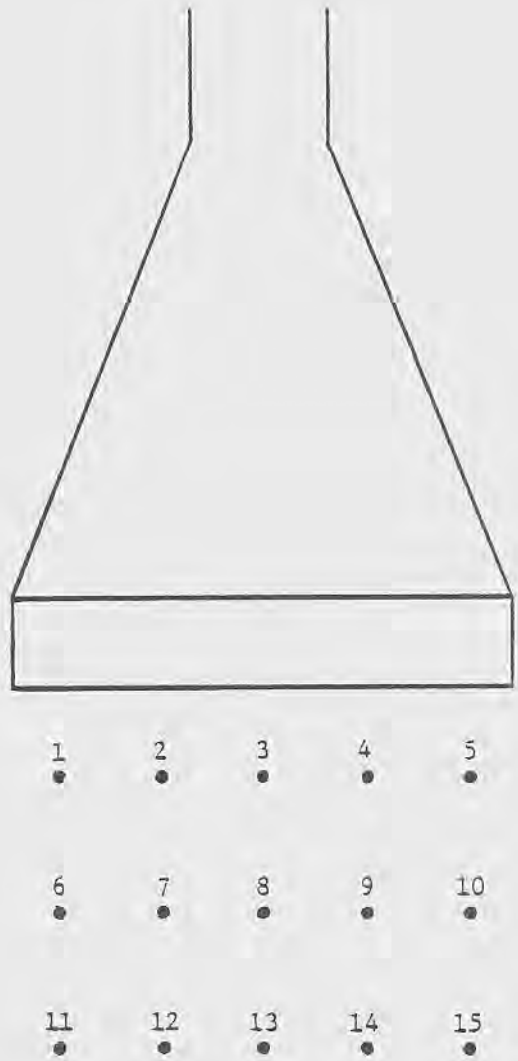

Position No	Face m/s	Velocity fpm
1	4.32	850
2	4.83	950
3	4.58	900
4	4.83	950
5	3.56	700
6-10	1.27-1.52	250-300
11-15	0.25-0.51	50-100

Figure 21. Briquetting machine hood face velocity measurements.

Table 7. Personal Sampling Data for Operator of Briquetting Press #3

Location	Lead (ug/m^3)	Copper (ug/m^3)	Zinc Oxide (ug/m^3)
Operators Work Station	43	660	73
Operators Work Station	32	160	60

The results of this limited sampling indicate that the machine operator is well under the standard for lead exposure of 200 ug/m^2. This employee is also under the copper dust and mist standard of 1000 ug/m^2 and the zinc oxide standard of 5,000 ug/m^3.

Control Critique

Observation and evaluation of the briquetting machine emission control system indicate that the system effectively captures those emissions which it was designed to control. The emissions which are not captured are controlled by general ventilation. Exposure to these emissions might be reduced by providing more local ventilation or exhaust systems, although sampling results indicate that this may not be necessary. The operator is well below the permissible exposure limits for lead, copper dust and mist, and zinc oxide.

One important critical observation was made concerning the operation of the briquetting control system. Calculation of the flow rate into the hood based on area and face velocity measurements indicated that the system was operating at approximately 50 percent of its rated capacity. Further investigation revealed that this was due to the fan running at an improper speed. This was brought to the attention of the operator and the situation was to be corrected.

REVERBERATORY FURNACE SMELTING

Equipment and Controls

The reverberatory furnace evaluated at Smelter 2295 is of brick and steel construction with typical throughput ranging from 36,300 to 72,600 kg (80-160,000 lb) of metal. It is rectangular in shape as shown in Figure 22. The furnace evaluated is of top charge design with side access doors for slag removal and refining. The furnace is fired by natural gas and can be fired by fuel oil.

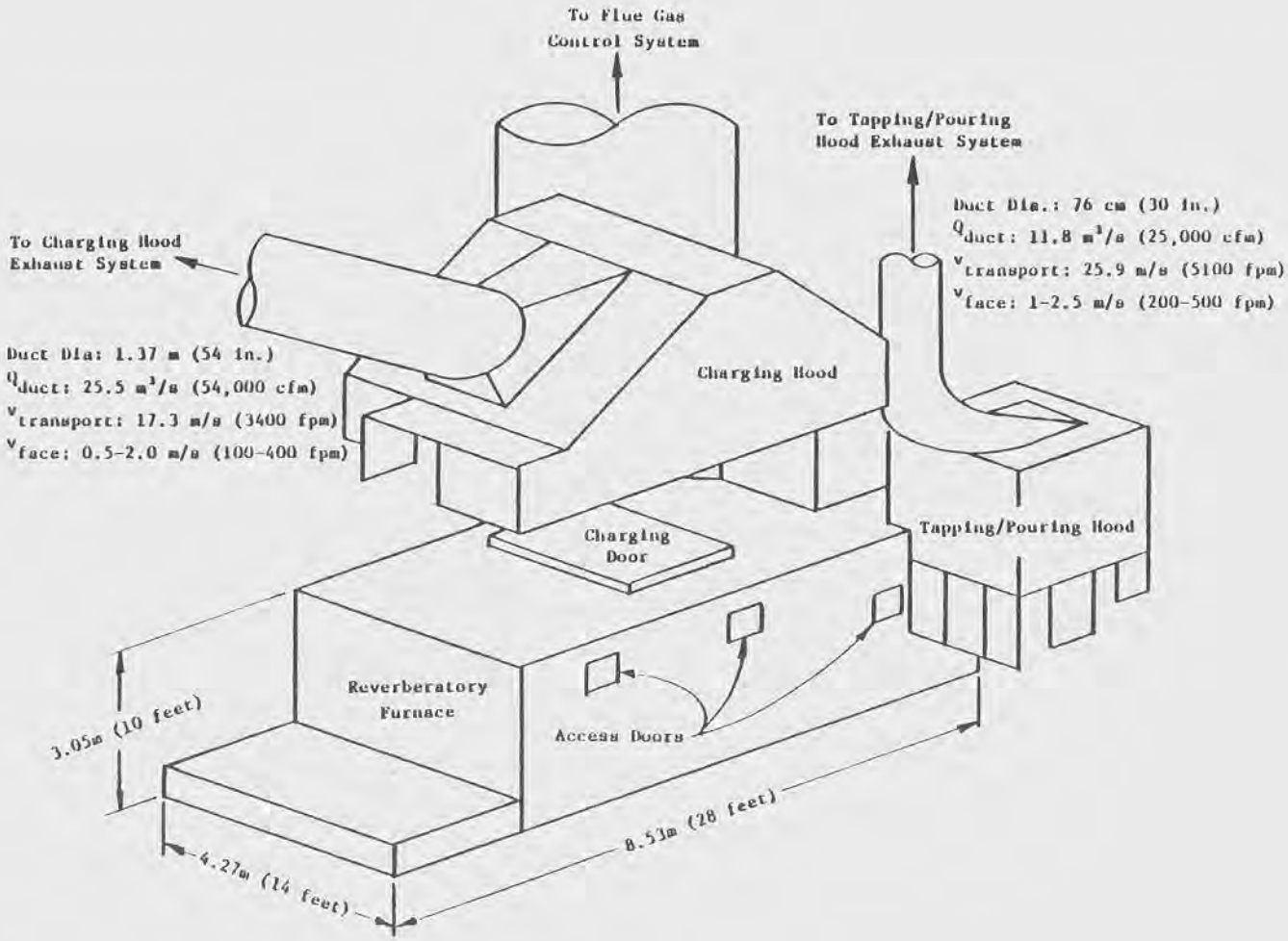

Figure 22. Reverberatory furnace and controls.

Reverberatory furnace smelting operations at Smelter 2295 are used to produce copper alloys ranging in copper content from approximately 81 - 85 percent with the remaining metal made up by zinc, lead, and tin in decreasing order of significance. A crew of ten employees is assigned to reverberatory smelting at this smelter. The furnaces operate on 48-hour cycles. Charging is accomplished during the first two 8-hour shifts of a 48-hour cycle. Refining starts during the second 8-hour shift and continues through the fifth 8-hour shift, and pouring commences during the sixth and final 8-hour portion of the 48-hour cycle.

The major control systems for the furnace include a flue gas collection system which removes flue gas from the top rear of the furnace. Flue gases travel through a brick-lined flue to a gas cleaning system consisting of a spark arrester, U-tube cooler, and baghouses with combined capacity of 23.1 m^3/s (49,000 cfm). The furnace is also equipped with a charging hood and a tapping/pouring hood at the rear corner of the furnace. The charging hood is served by a baghouse air cleaning system with a capacity of 25.5 m^3/s (54,000 cfm). The tapping/pouring hood is served by a baghouse system with 11.8 m^3/s (25,000 cfm) capacity. Emissions which escape these controls are diluted in the workplace by air which enters through doors and windows. This dilution air exits either through the hoods provided for the furnace or through the axial roof fans located above the reverberatory smelting area of the furnace building. These roof fans have capacities of approximately 28.3 m^3/s (60,000 cfm).

The controls for this reverberatory furnace are both continuous and intermittent in their operation. The flue gas collection system operates continuously during the charging, melting, and pouring cycles. The draft on the furnace is controlled by a sliding damper located near the point where the rectangular flue joins the cylindrical stack as shown in Figure 23. The charging hood located above the furnace normally operates only when the charging door of the furnace is open. However, this system can be manually overridden to allow constant hood operation. The ladle or pouring hood normally operates only when the pouring operation is in progress. Again, a damper must be adjusted to activate the control hood. The damper in this case is manually adjusted. The pouring hood ventilation system is normally used only when a reverberatory furnace is being poured with all of the system's capacity being applied to one hood. General dilution ventilation is provided by open doors, windows, and roof-mounted axial fans which normally continue during all shifts and smelting activities.

Emission Sources and Potential Exposures

Potentially toxic emissions can be emitted from the reverberatory smelting process into the working environment during a variety of smelting operations. These emissions may emanate from cracks or

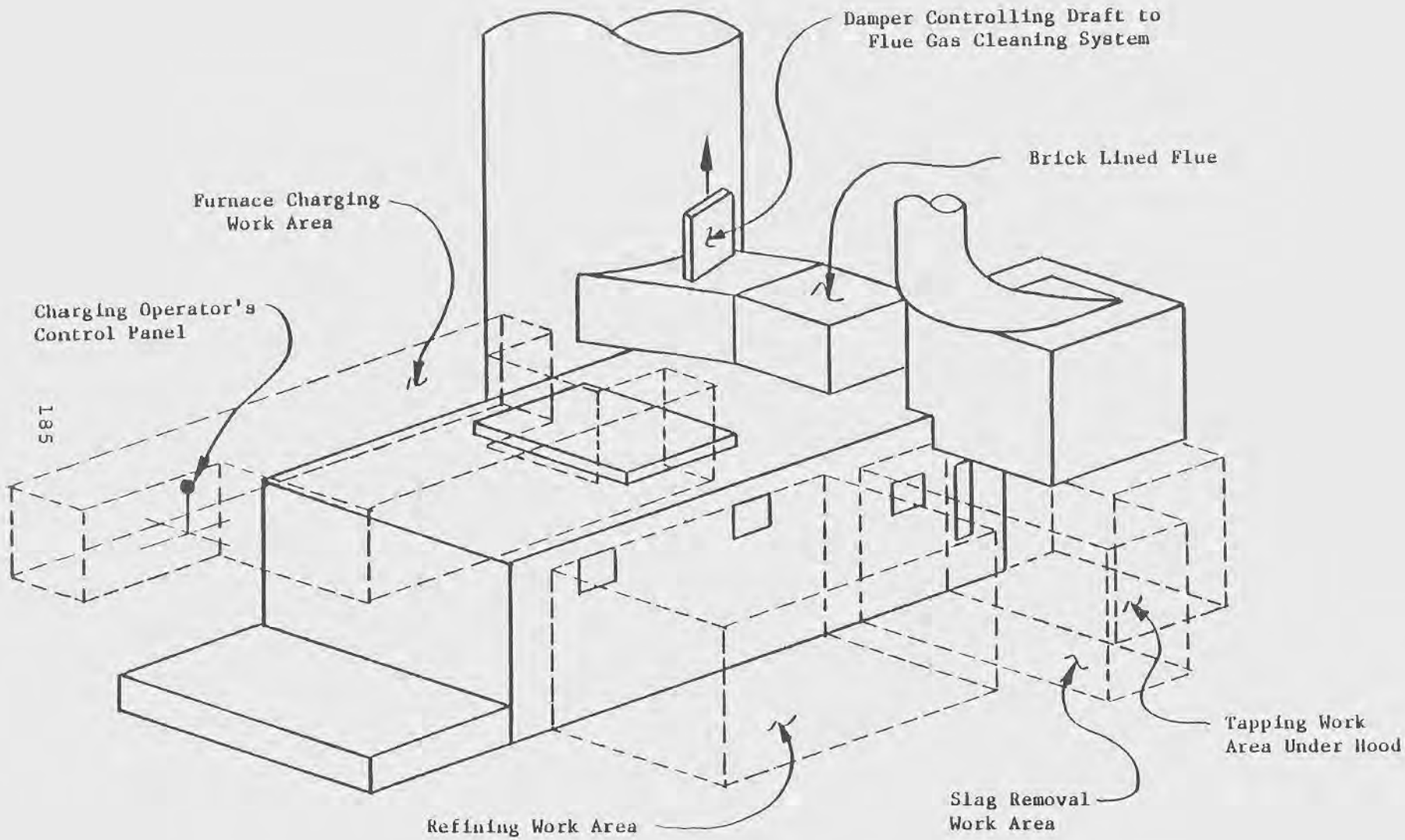

Figure 23. Reverberatory furnace employee work areas and flue gas draft control.

leaks in the structure of the furnace or from operations involving use of access doors, taps, etc.

Furnace Charging--
Following the completion of tapping and pouring of the furnace, the reverberatory furnace smelting cycle begins with the replacing of packing materials at the tapping port and refractory brick at the slag door. A very small heel of molten metal remains in the furnace after pouring is complete. During a period extending over two 8-hour workshifts, the furnace is charged through the top charging door. Charge materials consist of compacted radiators, milled and dried borings, a variety of plumbing scrap, as well as ingot metal to adjust to specific alloy composition. Once charging has been completed and the metal has been melted, samples are taken to determine the composition of the melt. The results of such sampling determine the refining techniques which are applied to bring the melt to the proper composition.

During the charging operations, when scrap materials are being added through the top charging door, emissions of metal fume and complex smoke emanate from the furnace and are quite effectively captured by the charging hood, shown in Figure 22. Employees do work in the vicinity of the charging door on top of the furnace while the charging operation continues as indicated in Figure 23. However, their exposure to emissions emanating from the open charging door is minimized by the use of materials handling equipment which can be operated from a position not directly under the hood.

While charging is being performed, two employees are required to manipulate feed materials on a work platform located at the top of the furnace as indicated in Figure 23. As stated earlier, their work activity does not require them to stay in close proximity to the charging door. However, they are exposed to potentially hazardous fumes and other emissions which boil out of the furnace when the door opens and are not immediately captured by the overhead charging hood. The furnace may also be operated under positive pressure during charging. If burners are not cut back and the flue gas damper adjusted properly, the material volatizing from the charge may overload the flue gas exhaust system and escape from side access doors and cracks, etc., in the furnace. These emissions rise into the charging hood and workmen performing the charging operation are intermittently exposed to them.

Charging is performed in stages. Material is added to the furnace and caused to melt and then more material is charged. Metal samples may be drawn to determine whether the planned ratio of additional charging material needs to be altered to produce the desired metal composition. While the charged material comes up to temperature, the furnace crew prepares other material for charging and tends the furnaces. Neither of these activities

requires them to work on top of the furnace under the charging hood.

The exhaust system for the charging hood is activated by the mechanism which also controls the opening of the charging door. The location of the control panel for this system is shown in Figure 23. When the door opens, the damper in the hood allows air to freely flow into the exhaust ductwork. Since it takes a few seconds for the exhaust system to establish a control pattern within the hoods, some of the emissions released when the charging door is first opened, may spill out of the hood or move laterally toward the operators position.

When the furnace door is closed, the damper shuts off all but minor draft to the hood. Frequently, emissions which escape from the furnace just before closing the door rise into the hood and are not swept into the exhaust ductwork before the draft to the hood is shut off by the damper. These emissions land inside the hood and drift out from under the hood as influenced by workroom air currents.

Charge Meltdown--
During the heating and melting of metal in the furnace, the combustion gases from the burners and the volatile materials driven from the molten metal (including metal fume) are controlled primarily by the flue gas collection system. Metal fumes most abundant are zinc, lead, copper, and tin. The draft to the flue gas collection system is regulated by a sliding damper as shown in Figure 23. Depending on the damper positioning, a slight positive or negative pressure may exist within the furnace. When negative pressure exists within the furnace, contaminants are drawn through the flue gas ductwork to the flue gas cleaning system. In this situation, air is drawn into the furnace through voids or cracks around the side and top access doors, and to a lesser extent through other cracks between refractory, etc.

To obtain more heating value from the fuel consumed, this reverberatory furnace can be operated at a slight positive pressure causing emissions to escape from the side access doors, around the top charging door, and from any cracks or voids in the refractory composing the structure of the furnace.

During normal conditions, these fugitive emissions rise under thermal propulsion and are diluted with air flow influenced by the axial roof fans, open windows, and doors. These emissions may collect momentarily in the charging hood above the furnace before being diluted. Again the charging hood does not operate routinely during any furnace operation except charging.

Refining--
Refining usually involves the use of air lances which are inserted through the side doors of the furnace while burners remain

operating. Air lancing will tend to oxidize excess zinc in the melt. It also serves to heat up the melt as the combination of zinc and oxygen is an exothermic reaction. Depending on other impurities and the need to adjust metal composition, a variety of other refining materials may be used. Among them would be the addition of iron borings or iron scale to bring impurities into the slag.

Finally, several other materials may be added prior to pouring to improve fluidity of the melt and maintain its quality through the pouring cycle. At this smelter, air lancing and addition of refining materials are accomplished through the side doors of the furnace as shown in Figure 22. Slag is removed from the side door located near the pouring and tapping hood. This particular access door is at a lower elevation than the other doors. The slag removal work area is shown in Figure 23. Following slag removal, refractory must be replaced in the slag door to allow full charging of the furnace.

Air lancing requires the insertion of metal tubes (lances) into the melt through side access doors. The tubes are manually inserted and manipulated to stir the melt. When lancing must continue for a prolonged period, the lances are supported by holding brackets. Burners and the draft on the flue gas control system are carefully controlled during air lancing to minimize overheating of the melt and emissions of metal fumes from the access doors.

Other refining operations involve the manual shoveling of ingredients into the furnace and mixing them into the melt. Normally, furnace firing is cut back during these operations. Employees may use long handled, hoe-like implements to mix the refining materials into the melt.

Slag Removal--
Slag removal involves manually hoeing slag from the surface of the melt out through the slag door and into a slag ladle located below the access door as shown in Figure 24. Employees work in teams of two to perform this operation.

Emissions of metal fumes from the slag door are minimized by maintaining draft on the furnace while firing is cut back. Metal fume emissions from the slag ladle are uncontrolled and rise into the workplace air. As slag ladles are filled they are replaced with empty ladles.

Tapping and Pouring::
Following slag removal the melt is prepared for tapping. Ingredients are added through the furnace side access doors to improve the fluidity of the melt and protect the surface of the molten metal inside the furnace.

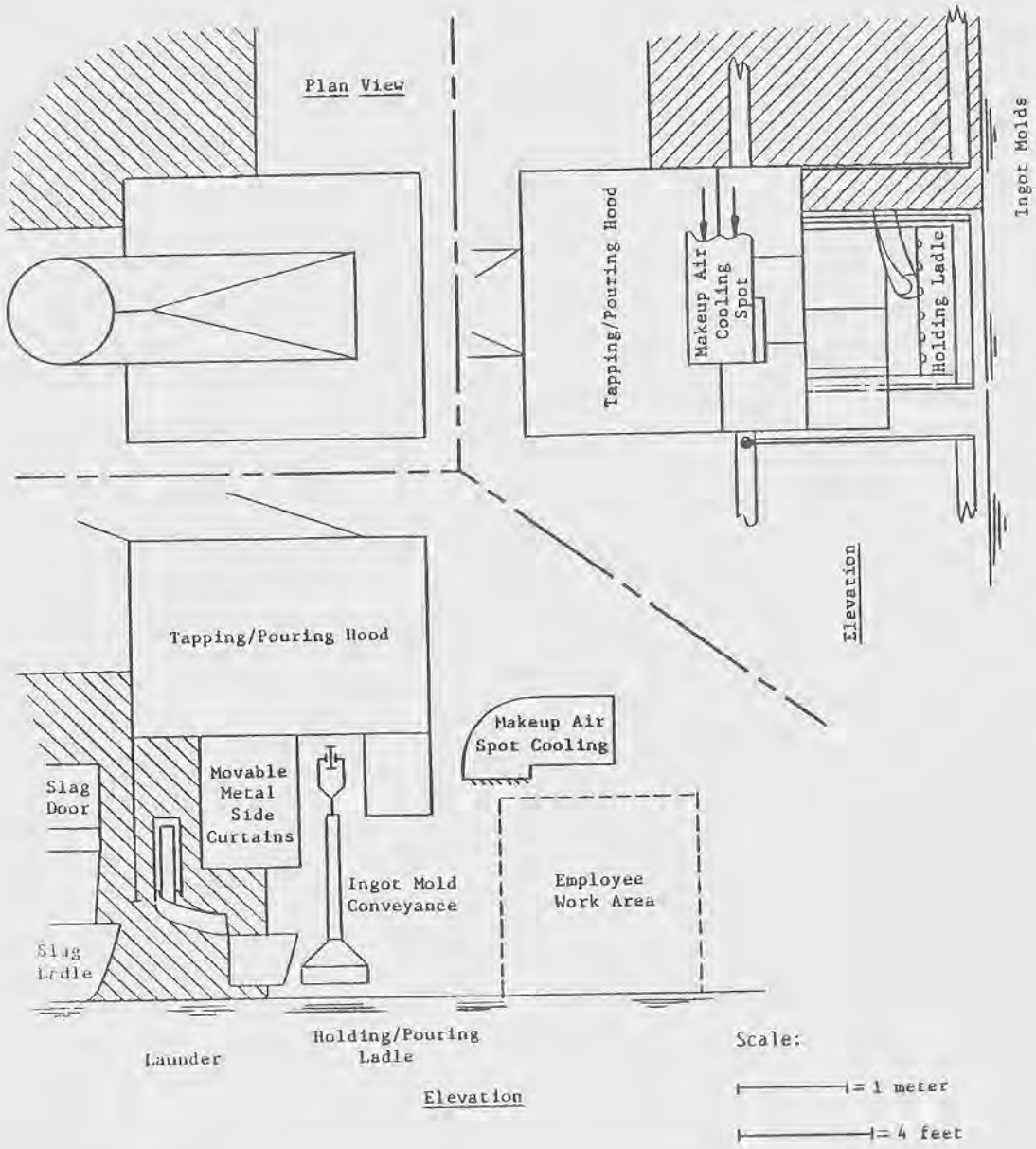

Figure 24. Multiple views: tapping/pouring hood.

When the melt is ready and its composition has been checked, the reverberatory furnace crew prepares to tap the furnace through the port located above the launder. The launder and the tapping port are both located under the tapping/pouring hood as shown in Figure 25. The hood is activated before tapping begins.

Working as a team, four furnace crewmen drill a hole through the packing. When the drill breaks through, it is removed and a control rod is positioned in the tap hole to regulate flow of molten metal into the holding ladle. As the holding ladle fills, the crew completes preparation for pouring. For example, side curtains are added to the tapping/pouring hood and heating burners are adjusted to maintain proper holding ladle temperature. The tapping crew works in the general area shown in Figure 23.

Molten metal flowing from the furnace via the launder to the open topped holding ladle emits copious quantities of metal fume. This fume rises into the hood and is exhausted to a baghouse dust collection system.

During pouring a crewman is stationed in front of the tapping/pouring hood as shown in Figures 24, 25, and 26. This crewman performs certain mold preparation and ingot finishing operations. The work area located in front of the hood is provided with a makeup air and spot cooling system to provide relief from heat and fresh air to improve breathing zone concentrations of workroom contaminants. Crewmen rotate from this work area to other activities several times during the pouring operation. Rotation affords relief from the radiant heat emitted by the molten metal and furnace structures.

A second crewman operates the pouring mechanism which tips the holding ladle. This crewman's work station is approximately 7 meters (20 feet) from the tapping/pouring hood on the cool side of the ingot carrousel as shown in Figure 26.

After passing from under the tapping/pouring hood, poured ingots proceed to cooling and mold dumping operations. During transit, any metal fumes emitted escape into the work environment. These fumes are dispersed by dilution air flowing through this work area under the influence of a combination of forces. Thermal lift currents and drafts from doors and windows caused by local exhaust hoods or roof-mounted axial exhaust fans all tend to move dilution air through this area.

After pouring is complete, the launder is removed, all of the packing is removed from the tapping port, new packing is installed, and the launder is replaced in preparation for the next metal tap which will follow charging and refining operations. New refractory is installed in the bottom of the slag removal door and the furnace is then ready to charge.

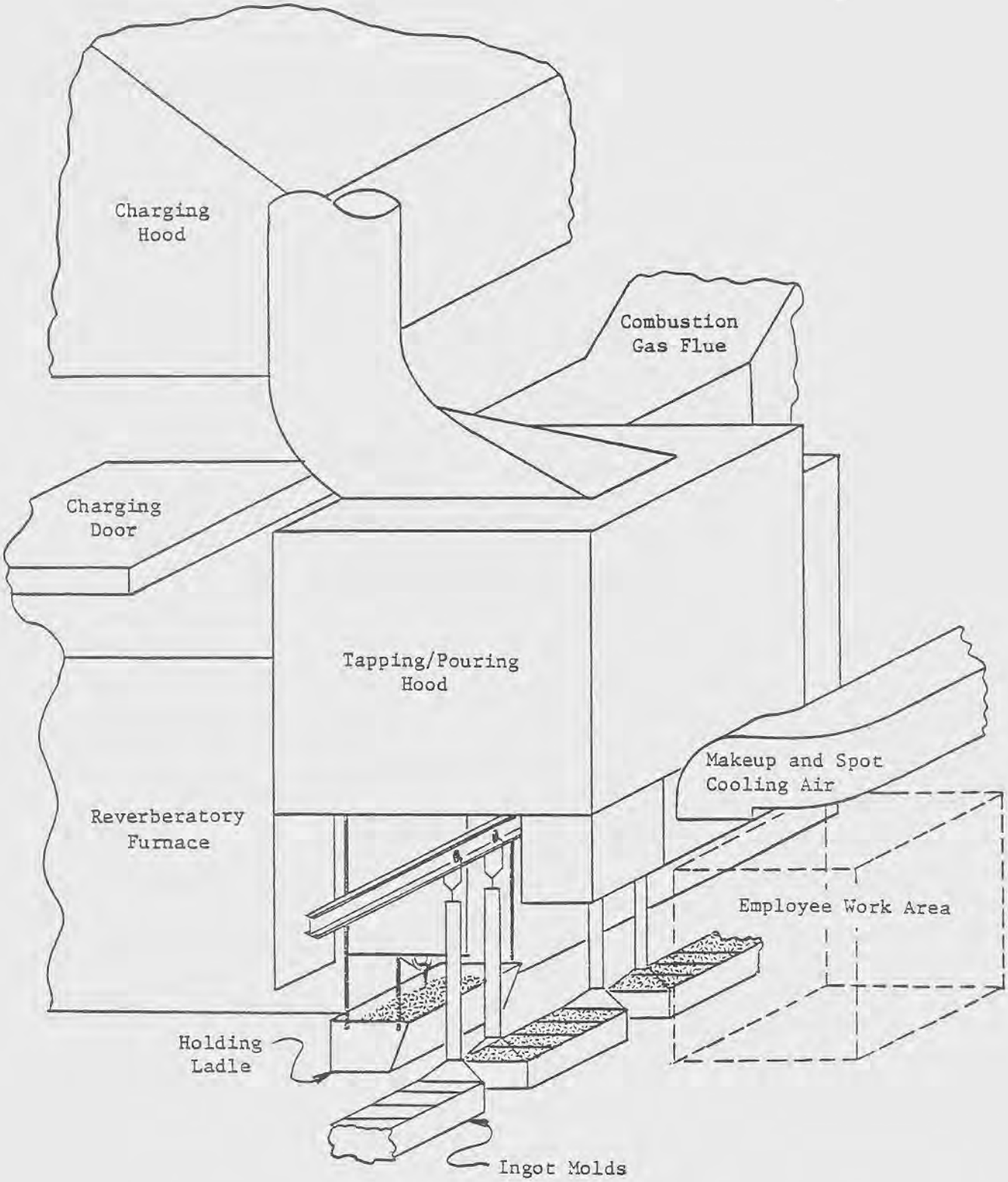

Figure 25. Relationship of tapping/pouring hood to other structures and employee work areas.

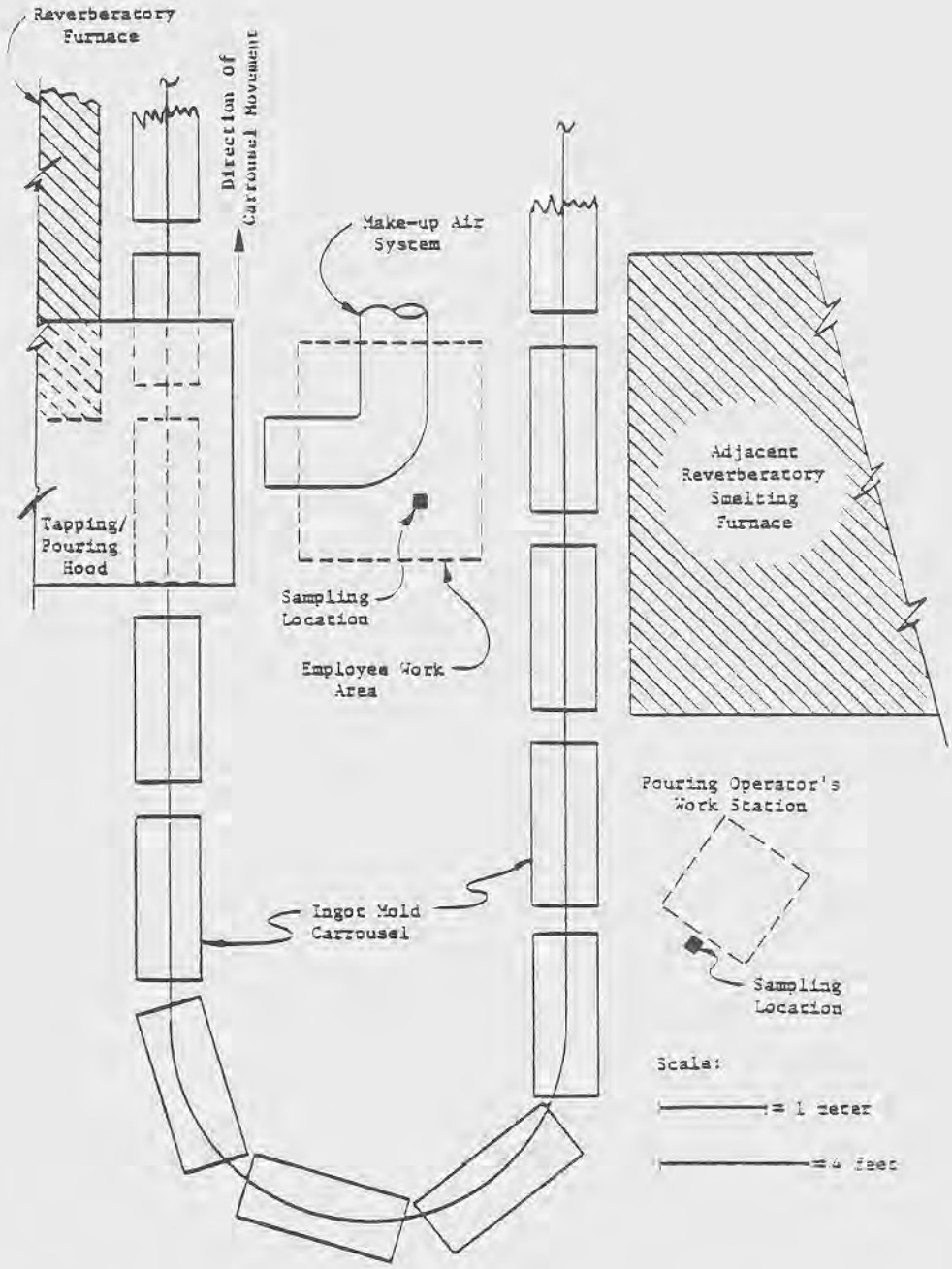

Figure 26. Ingot mold carrousel and pouring crew work stations.

Engineering Control Evaluation

Reverberatory furnace controls were evaluated using three basic types of information: engineering measurements and design considerations; observations; and air sampling information. These types of information will be discussed in conjunction with the controls evaluated.

Tapping/Pouring Hood--
The tapping and pouring hood is shown in several of the figures which are part of this report. The interactions of employees with this control were described in some detail in earlier portions of this report.

The presence of this hood is necessitated by the emission of copious quantities of metal fumes during the tapping and pouring operations. The hood has been designed to effectively contain billows of fume rising under thermal propulsion. The hood is constructed of heavy gage metal and fitted with movable metal side curtains to permit access and improve enclosure during use.

Engineering Measurements--The tapping and pouring hoods for reverberatory furnaces at this smelter are connected to an air collection and cleaning system which consists of a spark arrester and baghouse. The baghouse has a rated capacity of 11.8 m^3/s (25,000 cfm) with an air volume to bag area ratio of 0.013 $(m^3/s)/(m^2)$ or (2.62 cfm/sq. ft.). Orlon bags are mechanically shaken and collected dust is screw conveyed to holding bins where it remains until sold or disposed.

Figure 22 shows the relationship of the tapping/pouring hood to the reverberatory furnace. Figure 23 indicates the area under the hood where employees work during tapping. Figure 25 shows a close-up view of the hood, the holding ladle, ingot molds, employee work area during pouring, and the makeup air and spot cooling system. Figure 24 gives a plan view with two elevation views showing the spacial relationship of equipment hood structures and employee work areas.

Air velocity measurements were made at the face of the hood on all sides. Measurements were taken at a distance of 15 cm (6 inches) below the side curtains or hood wall at the locations shown in Figure 27. In every case air flow was into the hood. Air velocities at the face were found to range from 0.89 - 2.29 m/s (175-450 fpm). Capture velocities could not be measured safely or meaningfully given the presence of flowing molten metal under the hood. Capture velocities determined without the presence of molten metal would be of no value to the evaluation.

Flow of air in the ductwork leading from the hood to the baghouse was estimated from baghouse fan performance data. Due to the

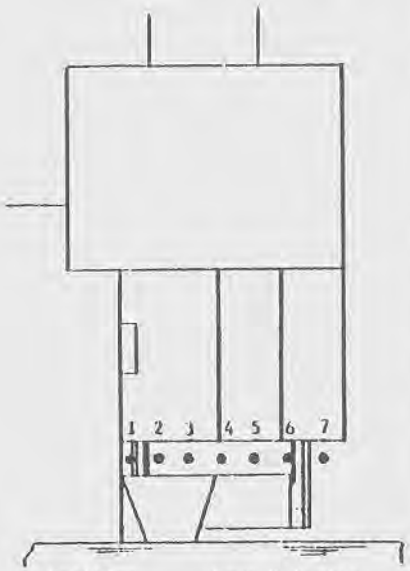

Position No.	Face Velocity mps	fpm
1	2.29	450
2	2.29	450
3	2.29	450
4	2.03	400
5	2.03	400
6	2.03	400
7	1.78	350

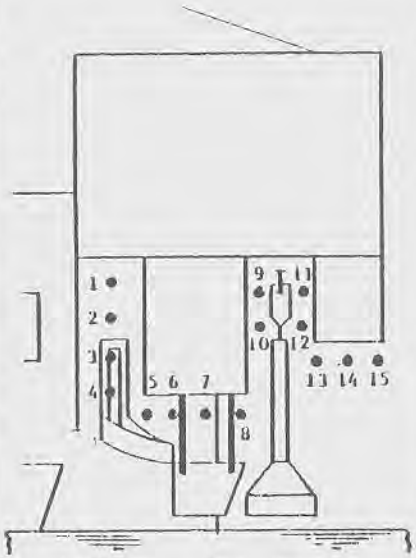

Position No.	Face Velocity mps	fpm
1	2.03	400
2	1.52	300
3	1.78	350
4	2.29	450
5	1.78	350
6	2.03	400
7	2.03	400
8	1.78	350
9	2.54	500
10	2.03	400
11	2.03	400
12	2.03	400
13	1.78	350
14	2.03	400
15	1.52	300

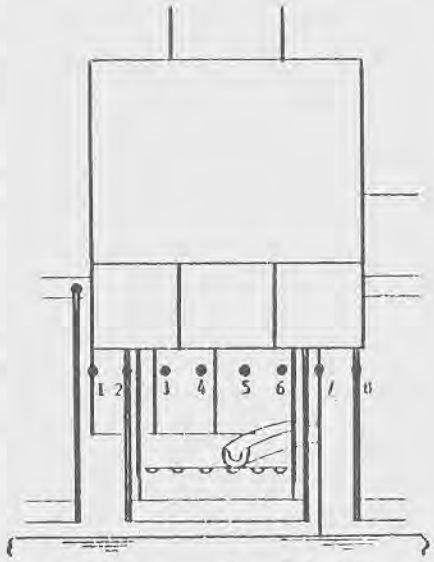

Position No.	Face Velocity mps	fpm
1	0.89	175
2	0.89	175
3	1.27	250
4	1.27	250
5	1.27	250
6	1.27	250
7	1.27	250
8	1.27	250

Figure 27. Tapping/pouring hood face velocity measurements.

presence of dampers which closed off other tapping/pouring hoods and the lack of other entrances to the ductwork, it was assumed that virtually all of the air flowing through the baghouse was entering the system through the tapping/pouring hood being evaluated. This assumption allowed calculation of approximate air transport velocity inside the 0.76 m (30-inch) diameter duct leading away from the hood. By this method the transport velocity was determined to be approximately 25.9 m/sec (5,100 fpm).

Observations--Visual observations of hood effectiveness were made during both tapping and pouring. Additionally, observation of slag removal under the influence of the adjacent tapping/pouring hood was made.

The molten alloys being produced in the reverberatory furnace emit billows of visible metal fume as they flow through the launder to the holding ladle and on to the ingot molds. Simple observation of the flow of visible metal fumes from their origin into the hood indicates that the hood very effectively collected fume emissions. These visual observations were supplemented by use of ventilation smoke tubes to illustrate air movement at all edges of the hood and inside the hood. No serious eddies were found and in all locations generated smoke was observed to briskly move into the hood.

Air Sampling--A very limited amount of air sampling was employed to determine whether the hood helped to improve the work environment at the locations where employees work during pouring. Sampling was determined to be of little use in evaluating this hood since the air around the hood was subject to contamination from many other sources of emission. The contribution of contamination made by the emission sources controlled by the hood could not be isolated.

Due to the frequent rotation of employees from work area to work area during pouring, it was decided that area monitoring would be most appropriate. The work area in front of the tapping/pouring hood and the pouring operator's work station were selected for monitoring. Both of these locations are shown in Figure 26.

Air samples were gathered at these two locations during a 2-hour period before tapping and pouring commenced, and for a 4-hour period during pouring. During the first sampling period, the hood was not in operation as is normal practice. Employees were not present at the sampling locations during this period. The hood was operated continuously and employees were present at the two sampling locations during the second period of sampling.

Table 8 shows the results obtained by this limited sampling. Samples were collected on membrane filters with 0.8u pore size and analyzed by atomic absorption spectrophotometry.

Table 8. Air Sampling Data Associated with Operation of the Tapping/Pouring Hood

Sampling Location	Time	Lead ug/m^3	Copper ug/m^3	Zinc Oxide ug/m^3
In front of tapping/ pouring hood	Prior to tapping and pouring	320	43	2,000
In front of tapping/ pouring hood	During pouring	200	48	620
At pouring operator's work station	Prior to tapping and pouring	380	52	2,400
At pouring operator's work station	During pouring	320	83	610

From the data contained in Table 8, it can be observed that lead-in-air concentrations were high at both sampling locations prior to tapping and pouring. During pouring, lead-air-concentrations dropped substantially. It can be concluded from these data, and air flow patterns determined by use of smoke tubes, that operation of the tapping/pouring hood has a positive influence on the level of contamination present at these two locations. Furthermore, the emissions from the pouring operation were effectively controlled as they did not raise air contamination in front of the hood to a level exceeding the background concentration measured with the hood off and no pouring on-going. In effect, operation of this hood causes approximately 11.8 m^3/s (25,000 cfm) to flow into and through the workspace surrounding the tapping/pouring hood and then into the hood itself. This air tends to dilute background workroom contamination caused by other sources of emission and effectively captures emissions from pouring.

Charging Hood--
The charging hood is shown in Figure 22. The interaction of employees with this control were described in some detail in earlier portions of this report.

The presence of this hood is necessitated by emission of metal fumes and other non-specific contaminants which occurs during charging. The hood has been designed as a receiving hood to contain the intermittent voluminous emissions from the charging door as it opens and closes. The hood is constructed of heavy gage metal and is not fitted with movable side curtains or other temporary structures.

Engineering Measurements--The charging hoods for reverberatory furnaces at this smelter are connected to an air collection and

cleaning system which consists of a spark arrester and baghouse. The baghouse has a rated capacity of 25.5 m^3/s (54,000 cfm) with an air volume to bag area ratio of 0.015 $(m^3/s)(m^2)$ (3.0 cfm/sq. ft.). Orlon bags are mechanically shaken and collected dust is screw conveyed to holding bins where it is held for disposal.

As observed during this evaluation, the exhaust system serving the reverberatory furnace charging operations was only used when charging was being conducted. The system is provided with dampers which results in virtually complete application of the entire baghouse capacity to one charging hood while it is being used.

Figure 22 shows the relationship of the charging hood to the reverberatory furnace. Figure 23 indicates the area under the hood where employees work during charging.

Air velocity measurements were made at the face of the hood on all sides. Measurements were taken at a distance of 15 cm (6 inches) below the side walls of the hood. In every case air flow was into the hood. Air velocities at the face were found to range from 0.5 - 2.0 m/s (100-400 fmp). Capture velocities could not be measured safely or meaningfully given presence of extreme heat, gases, vapors, sparks, etc., during actual charging. Capture velocities determined without the operation of the charging door and subsequent emission flows would be of no value to the evaluation.

Flow of air in the ductwork leading from the hood to the baghouse was estimated from baghouse fan performance data. Due to the presence of dampers which closed off other charging hoods and the lack of other entrances to the ductwork, it was assumed that virtually all of the air flowing through the baghouse was entering the system through the charging hood being evaluated. This assumption allowed calculation of approximate air transport velocity inside the 1.37 m (54-inch) diameter duct leading away from the hood. By this method the transport velocity was determined to be approximately 17.3 m/s (3,4000 fpm).

Observations--Visual observations of hood effectiveness were made during charging and during all other steps in the reverberatory furnace smelting cycle. These observations have been discussed earlier in this section as related to employee interactions with the control. The major conclusion drawn from these observations is that the charging hoods should be operated continuously during charging periods and not turned on and off as the charging door opens and shuts. In addition, the charging hoods should be utilized when the furnaces are operated under positive pressure. Under these conditions, emissions from side access doors would be more effectively removed from the work environment.

Visual observations of the flow of charging emissions into the charging hood were supplemented by use of ventilation smoke tubes

to illustrate air movement at all edges of the hood and inside the hood. No serious eddies were found in association with the hood; however, air movement in portions of the hood farthest from the exhaust take-off were found to be rather sluggish.

Air Sampling--A very limited amount of air sampling was employed to indicate the level of contamination present in the vicinity of the charging door operator control panel. Area samples were taken at the control panel location (shown in Figure 23) both before and during charging operations. In this case two furnace charging hoods were sampled. One furnace was undergoing initial charging while the other was receiving final charge materials.

Table 9 shows the results obtained by this limited sampling. Samples were collected on membrane filters with 0.8u pore size and analyzed by atomic absorption spectrophotometry.

Table 9. Air Samping Data Associated with Reverberatory Furnace Charging Hoods

Sampling Location	Time	Lead ug/m^3	Copper ug/m^3	Zinc Oxide ug/m^3
Control Panel Furnace #1	During heating of melt with positive pressure. Charging hood off.	220	74	500
Control Panel Furnace #1	During final charging. Charging hood operating intermittently.	490	180	1,100
Control Panel Furnace #2	During final pouring of furnace. Charging hood off.	320	110	940
Control Panel Furnace #2	During initial charging. Charging hood operating intermittently.	240	71	760

The results of this limited sampling add little to the evaluation of the charging hood as a control device. The samples do indicate the presence of high lead-in-air concentrations which are consistent with the general flow of emissions from the furnaces past the control panel and into the roof ridges. Concurrent measurements of carbon monoxide concentrations were made at the control panels for the two furnaces. Carbon monoxide concentrations ranged from 35 - 50 ppm.

From this discussion, it can be concluded that although charging hoods remove much of the emissions caused by charging, they do not effectively remove all emissions. The result is that work

areas like those at the charging door operator control panel experience high levels of air contamination.

Flue Gas Control System--
The reverberatory furnace flue gas control system consists of brick-lined flues which connect to a stub stack and then to more brick-lined flues to a spark arrester, U-tube cooler, and baghouse. The draft from the flue gas control system to each reverberatory furnace is controlled by a damper in the brick-lined flue as shown in Figure 23. This damper is controlled by the furnace crew. It may be positioned so as to create a positive or negative pressure within the furnace with respect to the workroom environment.

Flues are provided with conveniently located access doors to permit removal of dust accumulations. The doors have been provided at locations where dust settles due to eddies or where other abnormal flows occur. Reverberatory furnace flues are cleaned one time per week. Before cleaning, flues are allowed to cool for several hours. Deposits of dust are hoed out into containers. Cleaning of flues normally requires several manhours of work. Flue cleaning was not performed during this evaluation.

Engineering Measurements--The reverberatory furnace flue gas control system is served by two baghouses which can be operated individually or in tandem. The baghouses have rated capacities of 8.97 m^3/s (19,000 cfm) and 14.2 m^3/s (30,000 cfm). The air volume to fabric surface area ratios for the two baghouses are 0.013 $(m^3/s)/(m^2)$ or 2.58 cfm/sq. ft. and 0.011 $(m^3/s)/(m^2)$ or 2.15 cfm/sq. ft., respectively. Orlon bags are used in each baghouse. The bags are mechanically shaken with collected dust being screw conveyed to hoppers where it is held until transferred to tranportation units. Flue dust is sold to outside intrests and not recycled within the smelter. Flue dust contains approximately 65 percent zinc and 5 percent lead by weight. Sufficient baghouse capacity is available to keep reverberatory furnaces under substantial negative pressure with proper positioning of flue dampers.

Control Critique

Observation and evaluation of reverberatory furnace emission controls have suggested that several improvements might be made to reduce escape of fugitive emissions into the workplace.

The complete and effective control of emissions from a reverberatory furnace is very difficult to achieve. Control is complicated by the fact that there are many sources of emissions associated with the furnace structure and its operation. Furnaces which are constructed of refractory and steel are subject to leakage between bricks, at access doors, etc. The extreme temperatures involved and the constant build-up of frozen slag

and metal hinder the maintenance of close-fitting joints in structural materials and associated accessories. Control is further complicated by the fact that this furnace is operated on a batch production basis. The various stages in the batch smelting of scrap to finished alloy require variation in furnace operating parameters and access to the metal bath to add refining agents and extract slag or finished alloy.

The reverberatory furnace controls observed and evaluated at Smelter 2295 were designed and installed to control specific emissions during specific portions of the furnace operating cycle. The existing controls were not designed to control all emission sources during all reverberatory furnace smelting operations. Uncontrolled emissions at this smelter are significant and contribute to the high background lead-in-air concentrations detected by some of the area samplers used in this evaluation.

It was possible through the cooperation of the smelter to alter use of existing controls to determine whether they could aid in the capture of presently uncontrolled emissions. By observing the present use of existing controls and altering their use, it was possible to gain an appreciation for what additional modifications or new control systems are necessary.

Table 10 lists existing controls and the emission source they were designed to control. In addition, the table indicates other sources of emission which could be at least partially controlled through modification in the physical structure or in the use of existing controls. These additional emission sources are presented in parentheses.

Table 10. Existing Controls and the Emission Source They Were Designed to Control

Control	Emission Source
Tapping/Pouring Hood	Tap hole Launder Holding ladle Ingot mold under hood (Slag removal and slag removal access door) (Ingots after pouring)
Charging Hood	Charging door (Side access doors during various smelting stages) (Slag removal)
Flue Gas Controls	Burner gases and emissions from the melt (Side access doors) (Charging door)
Roof Exhaust Fan	Non-specific fugitive emissions

The following paragraphs describe how these controls could be modified in physical structure or used to capture additional contaminants.

Tapping/Pouring Hoods--
The tapping/pouring hood might be modified to extend over the slag tapping door of the furnace. It could also be extended along the conveyor carrousel to control emissions from freshly poured ingots. This control could only be extended for a short distance along the monorail.

Figure 28 shows how the existing hood might be modified using as much of the existing hood as possible and additional movable side curtains to control emissions from the slag removal operation. A side curtain may require removal to allow the forklift truck access to pick up a filled slag ladle and replace an empty ladle.

Extendion of the hood along the ingot carrousel following the pouring station would be somewhat more difficult due to the presence of the ingot monorail and associated structures. Before the hood is extended in this direction, the fume emitting characteristics of the poured ingots should be studied. An early quenching system might be feasible and involve less overall control cost. The tapping and pouring hood should be operated continuously when slagging, tapping, and pouring are in progress. In the event that two furnaces are being slagged, tapped, or poured at the same time, the draft from the baghouse could be split between two hoods during the period of concurrent operation. This will result in less control efficiency at each hood but no major emission source would go completely uncontrolled as is now the case with slag removal.

Charging Hood--
The charging hood could be made more effective by improving the enclosure over the furnace and by operating the hood continuously. Figure 28 shows a possible modification of the hood side curtains that would afford better capture of emissions from the furnace and still allow operation of the sliding charging door and materials handling system which brings charge materials to the charging door.

The hood should be operated continuously to help control fugitive emissions from furnace side access doors anad cracks in refractory, etc., since sufficient baghouse capacity is available to operate two charging hoods simultaneously.

It may be necessary to damper off the second hood while a furnace is being charged. However, the hood serving the furnace being charged should be operated continuously and not intermittently as the charging door opens and closes.

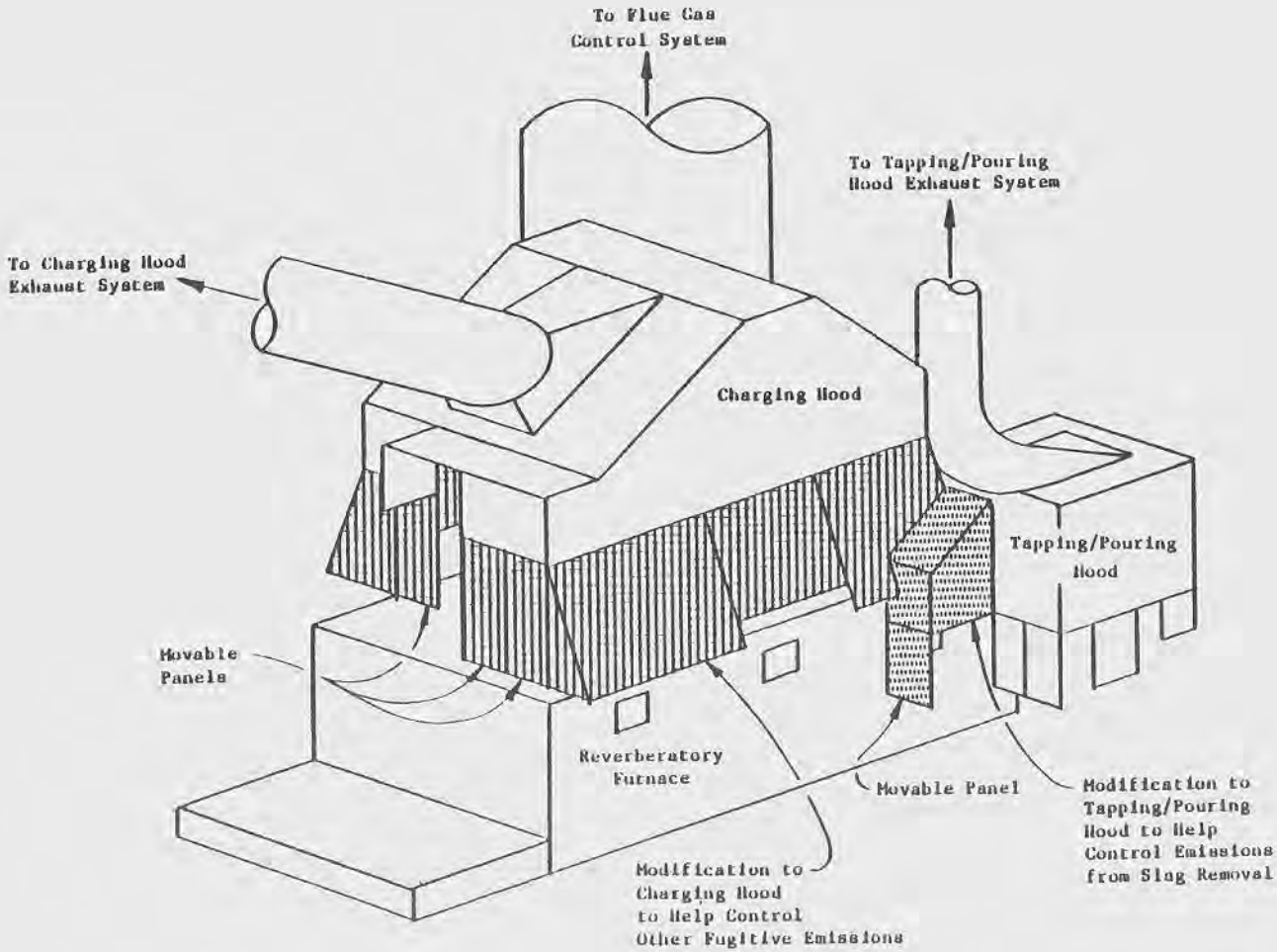

Figure 28. Modification to exhaust hoods to improve emission control.

Flue Gas Controls--
Improved emission control could be achieved if the draft to each furnace were regulated so that the furnace at all times operated under a slight negative pressure with regard to the work environment. This operating practice would require more careful furnace tending during the various phases of the smelting process and would increase fuel consumption. The present practice of maintaining slight positive pressure during melting to gain more heating value from fuel creates significant fugitive emissions from side access doors and the charging doors. If negative pressure were maintained, these emissions could be substantially reduced.

Roof Exhaust Fan--
Continued operation of axial exhaust fans located in roof structures will assist in removal of fugitive emissions which escape the controls discussed.

Makeup Air--
Changing the operation of the tapping/pouring and charging hoods to continuous or more continuous operation will require that more makeup air be available. This situation will be most apparent in cold weather when windows and doors are more likely to be closed. Objectionable drafts through doors and other openings may be created.

Given the design of the furnace building, it should be possible to provide entrances for makeup air which would (1) distribute the in-flow of air over the work area and (2) allow the inflowing air to be somewhat warmed before reaching employees. The sweeping action of in-flowing or makeup air will serve to dilute the air contamination present in the building and also carry it toward the exhaust hoods where it will be removed from the work area.

ROTARY FURNACE SMELTING

Equipment and Controls

Process Equipment--
The process equipment studied consists of a 27,200 kg (60,000 lb) capacity, steel jacketed, brick-lined, rotary furnace, schematically depicted in Figure 29. The furnace is top charged using a skip which is loaded at ground level, hoisted on a track, and dumped into the charging port on top of the furnace. The furnace is end-fired by a natural gas burner. Hot exhaust gases exit at the opposite end of the furnace.

The furnace is operated on a 24-hour cycle. Charging occurs during the afternoon shift. Pouring occurs during the day shift.

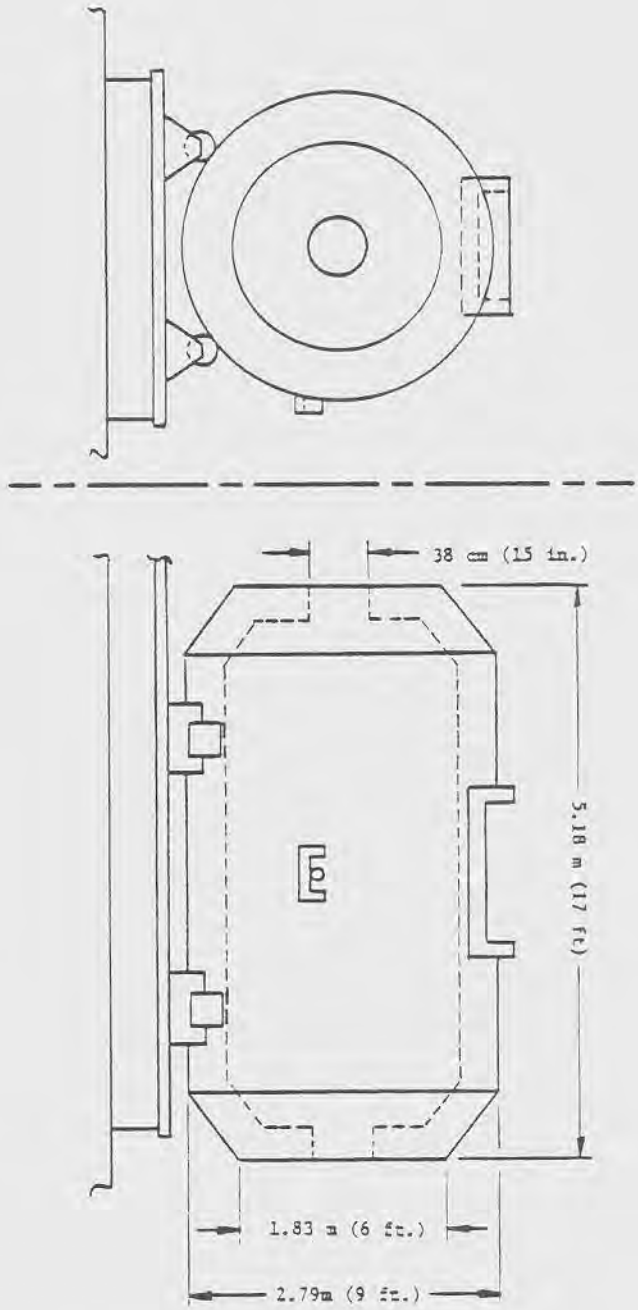

Figure 29. Rotary furnace.

During this study, the furnace was producing high-zinc bronze alloys.

Equipment Operation--
A crew of eight works at the furnace during pouring which normally lasts 2 - 3 hours. This crew consists of 4 skimmers who alternate two at a time between skimming and resting, 2 ladlemen, 1 pourer, and 1 ingot handler. One person charges the furnace during the charging cycle. During heating and melting no one works regularly in the area. However, periodically a metal sample is taken from the furnace for analysis at the plant laboratory. Figure 30 depicts the work location of employees during pouring.

Emission Sources and Potential Exposures

The primary hazard resulting from furnace operation is employee exposure to metal fume containing zinc oxide, lead oxide, copper, tin, etc. The following fugitive emission sites were visually identified during the study. (These are shown by an asterisk (*) in Figure 30.)

The Charging Door--
Emissions occur primarily during charging. The charging door effectively controls emissions during other operations. During charging, one employee is potentially exposed to the fumes emitted from the charging door. This employee is stationed at floor level on the opposite side of the pouring area. His duties require him to load skips with scrap metal and charge the skipload into the furnace. During charging, an overhead, two-compartment canopy hood is utilized to control emissions.

The Open Ends of the Furnace--
Emissions occur from both the burner and exhaust ends of the furnace, particularly during charging, melting, and upset conditions. During charging, the charging employee is potentially exposed. During melting and refining, no employees are regularly stationed in the area. The canopy hood which helps control charging emissions is also designed to receive and remove hot, buoyant fugitive emissions from the ends of the furnace.

The Tap Hole--
Emissions occur during tapping and pouring. Tapping is accomplished by rotating the furnace so that the tapping hole is accessible for opening. The hole is then lanced with a rotating bit by an employee standing 2.4 - 3.0 meters (8-10 feet) from the furnace. During subsequent pouring, emissions occur which potentially contribute to the exposure of the eight-man crew. A local exhaust hood is provided to capture the majority of these emissions.

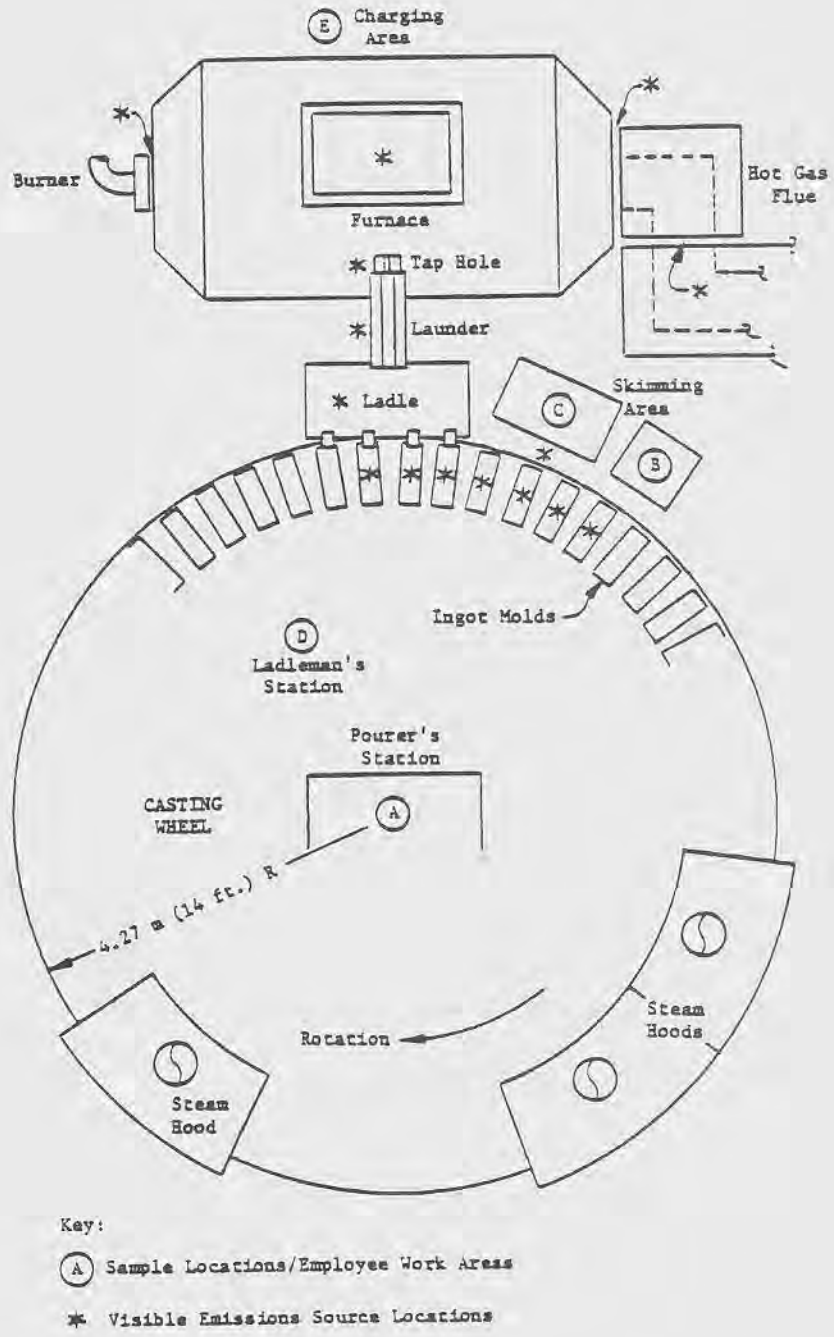

Figure 30. Process layout.

Engineering Control Evaluation

Five separate, but interdependent engineering control systems are utilized to control process emissions, fugitive emissions, and/or employee exposures. These five systems, explained in the following paragraphs, consist of: a process flue-gas control system; a fugitive emissions control system; a supplied-air-island makeup air system; an ingot squench steam control system; and a general dilution control system.

Each of these systems is evaluated separately, using the following evaluation criteria:

- Design (consistency with good practice)
- Engineering measurements (face velocities, transport velocities, fan SP, etc., sufficient for task)
- Visual observations (capture efficiencies during routine operations, upset conditions, etc.)
- Air sampling (control of exposures below PEL)

The section, "Control Critique," presents a critique of these systems as they operate as a unit.

The five ventilation systems used to control emissions from the rotary furnace are mutally exclusive, i.e., each operates independently and each serves a specific purpose. However, employee exposure control depends on the collective effectiveness of the five component parts. For this reason it is not meaningful to present air sampling results for individual controls.

Table 11 shows the results of limited sampling performed during the engineering analysis. Zinc oxide was chosen as an indicator substance because zinc exposure contribution from other potential sources in the plant was minimal.

No statistically valid conclusions can be drawn from the small sample. However, several trends or indications may be noted:

- As additional controls are brought on-line, particularly the supplied-air islands, exposure levels dropped.
- When all controls were on-line as compared to times when no employee exposure controls were on-line, airborne levels of zinc oxide were lower by 500 - 600 percent.

The exposure controls often result in exposure levels to employees that are actually lower than background levels. The reason for this anomaly is that the integrated control systems operate only during the time employees are working at the furnace. (See the section, "Control Critique.")

Table 11. Sample Results

Location[1]	Process Activity	Number Exposed at Furnace	Type of Sample	Controls On-Line[2]	Results in ug/m^3 ZMO	Pb[3]
B	Refining	0	Area	1,5	840	20
B	Pouring	8	Area	1,2,3,4,5	170	<18
B	Charging	1	Area	2A,5	830	340
A	Refining	0	Area	1,5	4600	69
A	Charging	1	Area	2A,5	1900	350
A	Pouring	8	Area	1,2,3,4,5	770	<17
A	Pouring	8	BZ	1,2,3,4,5	600	<16
D	Pouring	8	BZ	1,2,3,4,5	1200	29
D	Pouring	8	BZ	1,2,3,4,5	1200	23
E	Charging	1	BZ	2A,5	1100	350
C	Pouring	8	BZ	1,2,3,4,5	630	<17

[1]See Figure 30 for location key.

[2](1) Flue-Gas Exhaust System
(2) Fugitive Emissions System (Canopy Hoods), 2A (Charging) 2B (Pouring)
(3) Supplied-Air Islands System
(4) Ingot Quench Exhaust System
(5) Roof-Mounted Exhaust Fan

[3]High lead concentrations are thought to be associated with other operations adjacent to the rotary furnace.

Flue Gas Control System--
The rotary furnace process flue-gas control system consists of a brick-lined flue connecting to a spray cooler and baghouse. The section of the flue interfacing with the furnace (the take-off duct) is movable through the use of a hydraulic moving device. This system is shown in Figure 31. This flue is provided with access doors similar to the reverberatory furnace flues to permit removal of dust accumulations. The rotary furnace flues are cleaned weekly to assure proper flow. Before cleaning, flues are allowed to cool for several hours. Flue cleaning was neither performed, nor evaluated, during this study.

Engineering Measurements--The rotary furnace process flue-gas control system is served by a baghouse with a rated capacity of 20.5 m^3/s (43,500 cfm). The design transport velocity inside the 102 cm x 61 cm (60"x24") duct to the baghouse is 30.5 m/s (6,000 fpm). The air volume to fabric surface area ratios range from

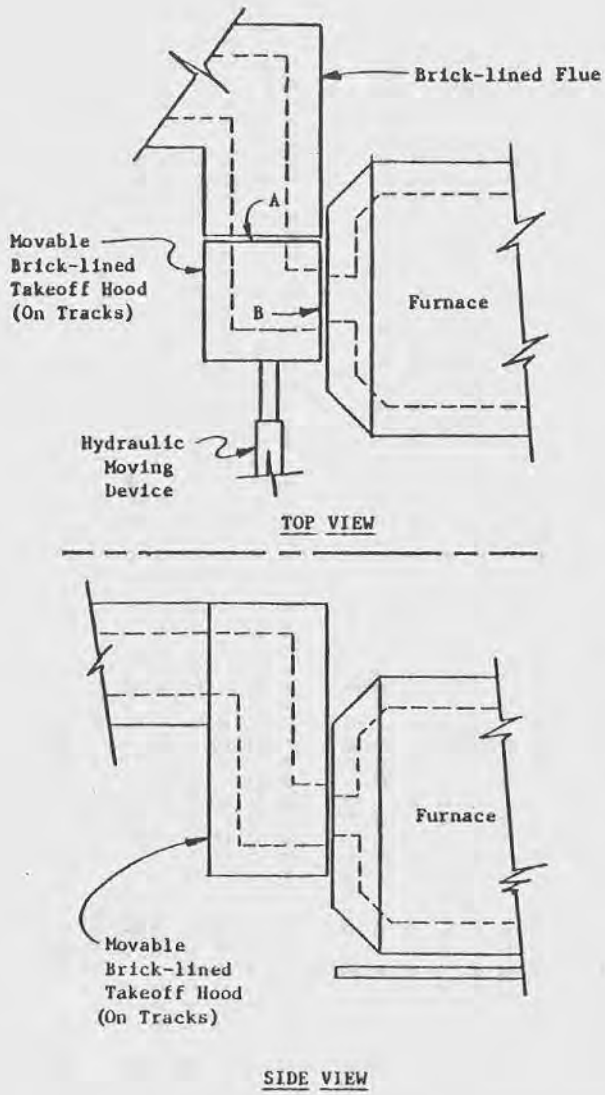

Maximum Operation Conditions

$Q = 18.9\ m^3/s$ (40,000 cfm)

$V_{transport} = 30.5\ m/s$ (6,000 fpm)

$V_{entrainment} = 25.1\ m/s$ (4,950 fpm)

Air/Gas Ratio = 1.66

Notes on Capture

- Gap at Point B: 10-13 cm (4-5")
- Gap at Point A: <1.3 cm (<0.5")
- Inlet Dimensions, B: 61 x 61 cm (24" x 24")
- Duct Dimensions (ID): 102 x 61 cm (60" x 24")

Fan Data

Type: Radial
Fan SP: 305 mm H_2O (12" H_2O)

Baghouse Data

Capacity: 20.5 m^3/sec (43,500 cfm)
ΔP: 165 mm H_2O (6.5" H_2O)
Type: Orlon
Inlet Temp: 116°C (240°F)

Figure 31. Hot flue gas exhaust system.

0.011 - 0.015 cms/m^2 (2.08-3.0 cfm/ft^3), and the maximum allowable working pressure drop across the bags is 15.0 cm H_2O (6.0" H_2). Orlon bags are used in this baghouse. The bags are mechanically shaken and the collected dust is screw conveyed to hoppers where it is stored until disposal. Flue dust which can contribute heavily to employee exposures, is not recirculated in the plant. No actual measurements of face or tranport velocities were made.

The following estimate of costs of construction for the hot flue gas exhaust system was obtained:

Capacity: 18.87 m^3/s (40,000 cfm)
Cost: $12,700 per m^3/s ($6/cfm) (installed cost for baghouse, fan, motor, spray cooler, miscellaneous hardware, 1978 prices
Cost of Refractory Flue: $200/ft (20"x40", including installation).

Observations--Visual observation of the flue gas control system indicated that the system effectively captured the exhaust gases during routine furnace operations. A small amount of fume was emitted intermittently from the gaps between furnace and the off-take flue, but these were drawn away from the work area by other systems designed to control fugitive emissions.

Fugitive Emissions Control System--
The fugitive emissions control system captures and removes fugitive emissions from the work area to a baghouse collector. This control system consists of two separate canopy hoods which collect emissions from the burner area, the off-take area, the charging area, and the tapping and pouring area. These hoods are shown in Figures 32 and 33.

Engineering Measurements--The canopy hoods for the rotary furnaces are connected to an air collection and cleaning system which consists of a spark arrester and baghouse. The baghouse has a rated capacity of 18.87 m^3/s (40,000 cfm). The air volume to fabric surface area ratio ranges between 0.011 and 0.15 cms/m^2 (2.08-3.0 cfm/ft^2), depending on the volume flow rate. Orlon bags are used and are mechanically shaken. The collected dust is screw conveyed to storage hoppers. Flue dust is not recirculated in the plant.

Figures 32 and 33 show the relationship of the fugitive emissions control system hoods to the rotary furnace. Figures 34 and 35 show details of the hoods and exhaust system.

The tapping and pouring hood, shown in Figure 34, is designed to have a face velocity of 1.93 m/s (380 fmp) with a tranport velocity of 16.5 m/s (3,250 fpm). The rated flow rate of this hood is 6.28 m^3/s (13,300 drm). The burner/charging hood, which controls fugitive emissions from the furnace (refer to Figure 35),

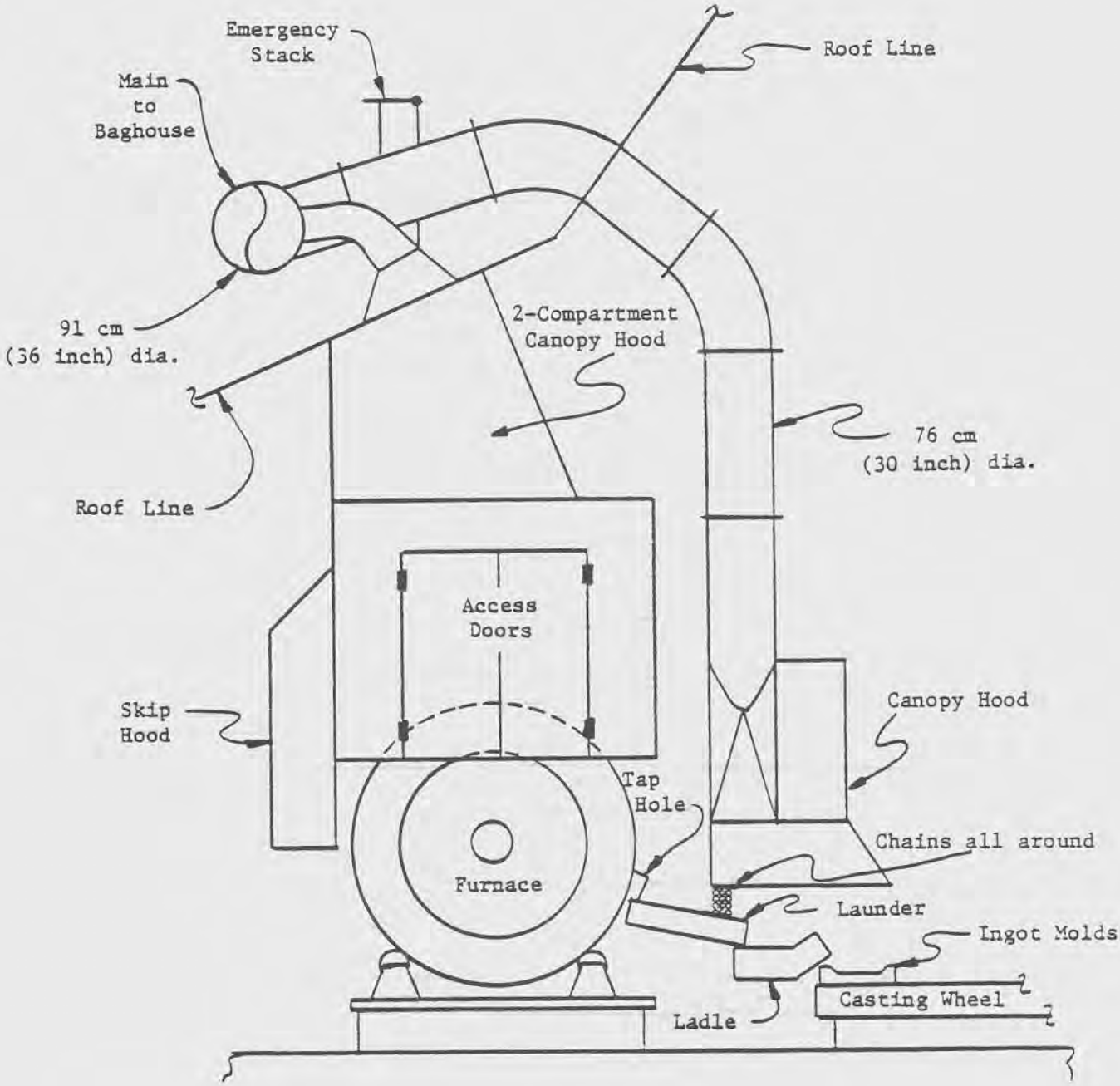

Figure 32. Local exhaust systems for fugitive emissions.

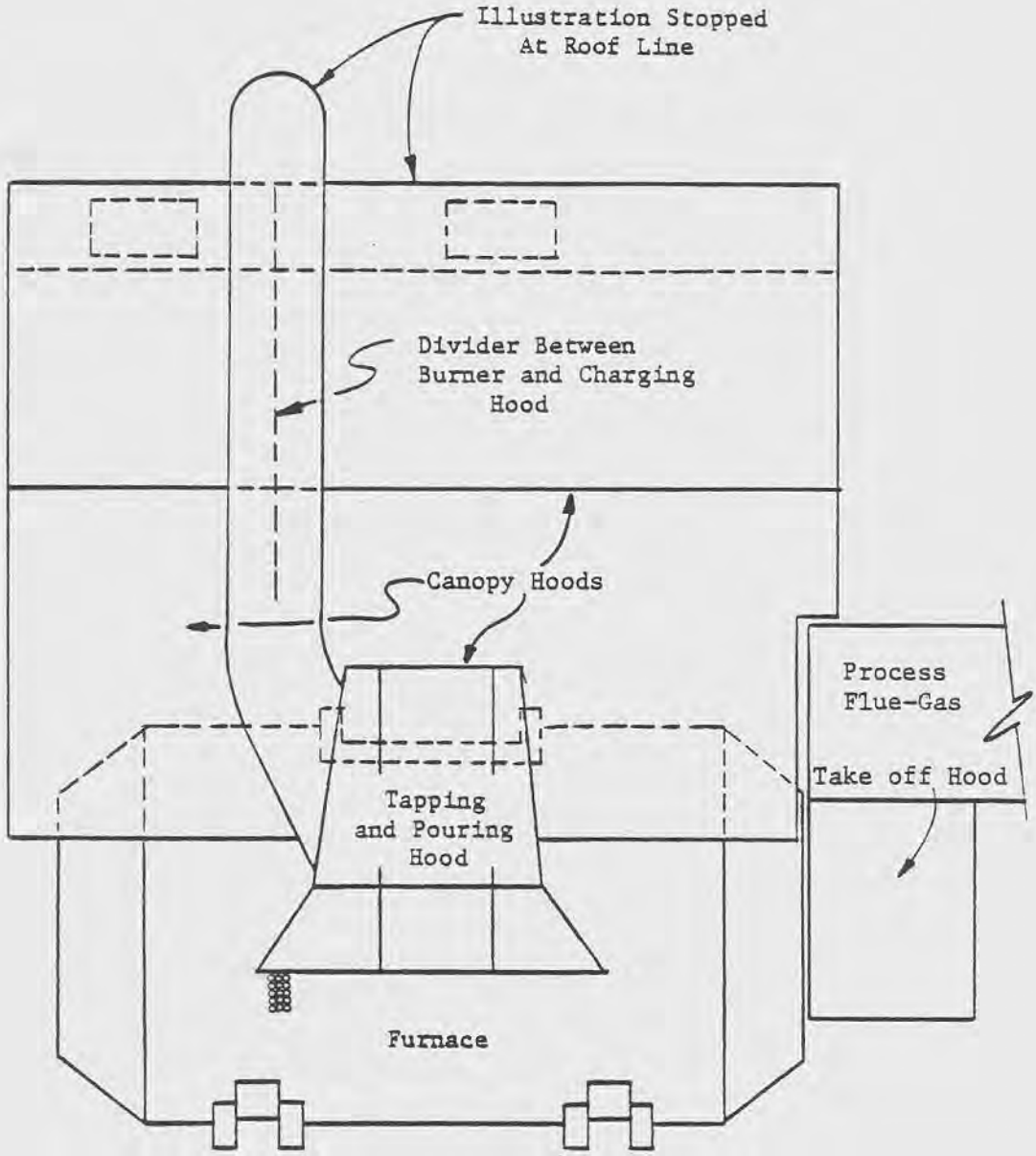

Figure 33. Front View of Rotary Furnace and Control Structures.

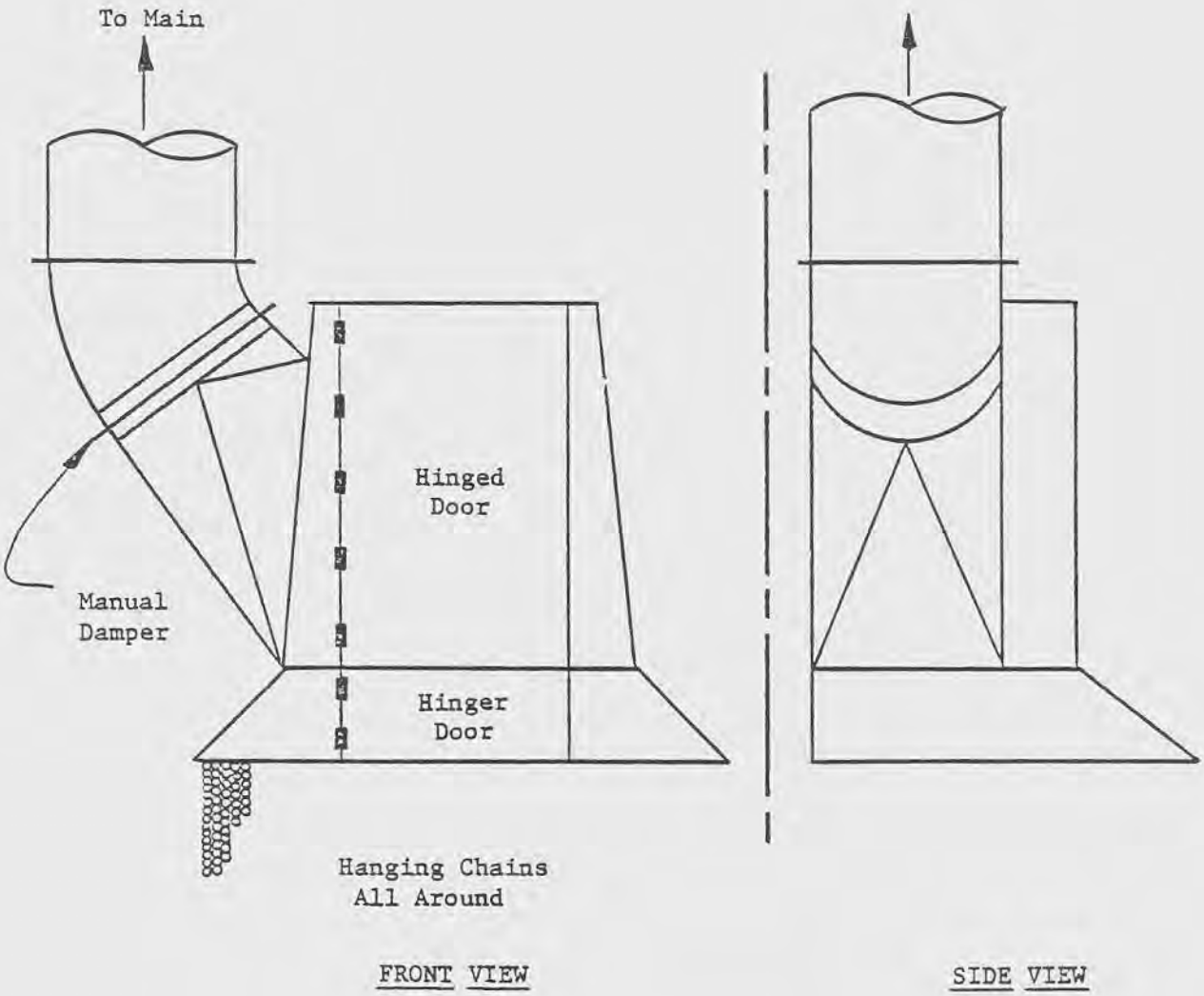

Design Capacities:

$Q = 6.28\ m^3/sec\ (13,300\ cfm)$

$V_{face} = 1.93\ m/sec\ (380\ fpm)$

$V_{transport} = 16.5\ m/sec\ (3,250\ fpm)$

$C_e = 0.6$ (estimate)

Figure 34. Tapping and pouring hood detail.

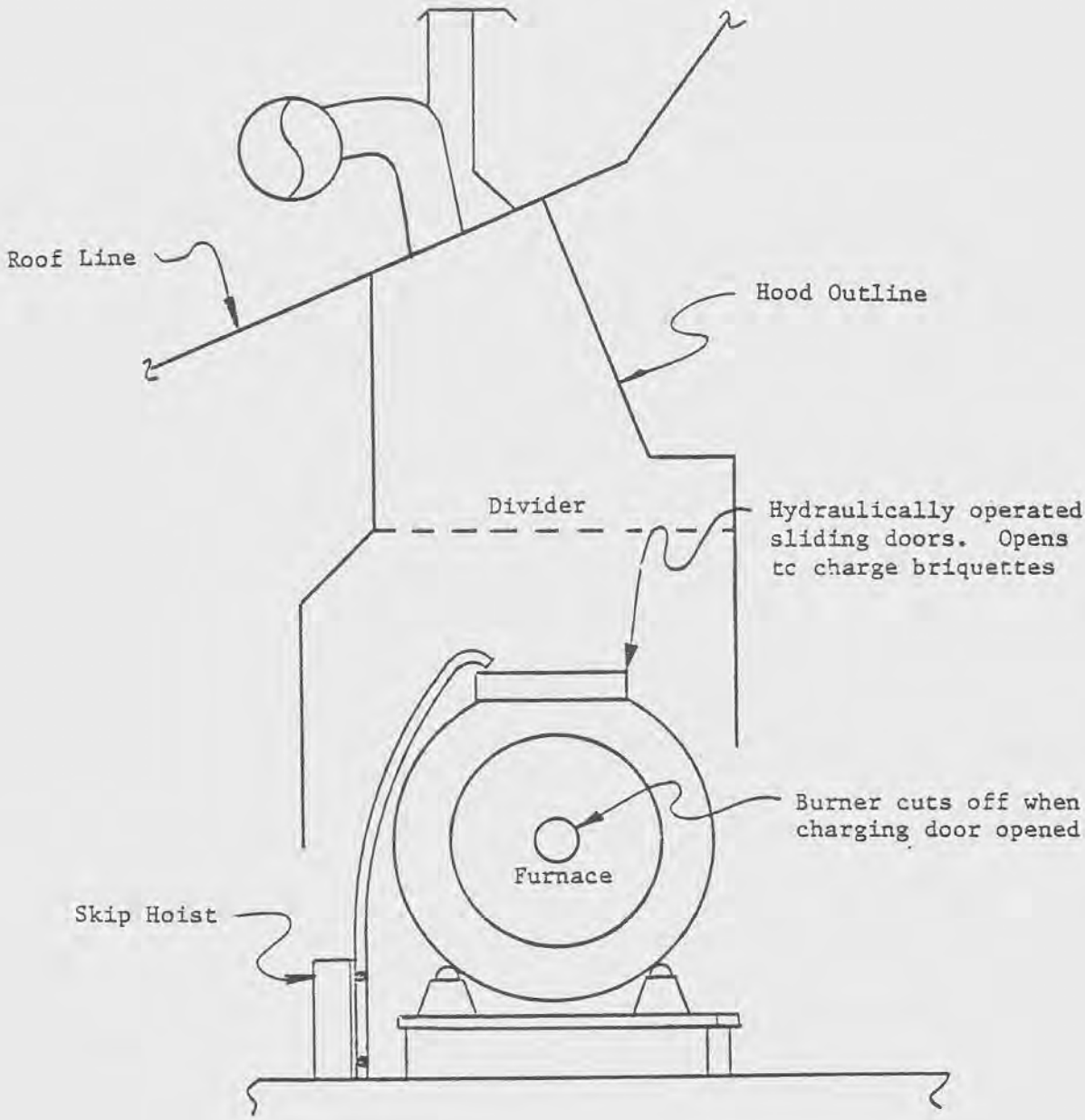

Design Capacities

$Q = 12.7\ m^3/sec$ (27,000 cfm)

$V_{receiving} = 0.9$ m/sec (160 fpm)

$V_{transport\ (branch)} = \sim 16.7$ m/sec (3300 fpm), maximum

Figure 35. Charging hood detail.

is similarly designed, with a receiving velocity of 0.9 m/s (160 fpm) and a transport velocity of 16.7 m/s (3,300 fpm). The entire hood is designed to move 12.7 m^3/s (27,000 cfm) of air.

Engineering measurements of face velocities and static pressures indicated operating conditions close to design parameters.

The following estimate of costs of construction for a similar fugitive emissions control system was obtained:

Baghouse Capacity: 18.87 m^3/s (40,000 cfm)
Cost: \$12,700 - \$17,000 per m^3/s (\$6-\$8/cfm). Cost estimate includes ductwork, hoods, baghouse, fan, motor; design, overhead, self-installation, and no structural changes in existing building; 1978 dollars.

Observations--Visual observations were made of hood effectiveness during both charging and tapping/pouring. The molten alloy being produced in the rotary furnace emitted visible metal fume as it flowed through the launder to the holding ladle and onto the ingot molds. Simple observation of the flow of visible metal fumes from their origin into the hood indicated that the hood effectively collected fume emissions.

As observed during this evaluation, the canopy hood exhaust system serving the rotary furnace was only used when charging or tapping/pouring was being conducted. The system is controlled with dampers which can provide complete application of the entire baghouse capacity to the fugitive emission control system of one of three similar furnaces. The furnaces are typically operated one at a time.

Supplied-Air Island System--
The supplied-air island system, shown in Figure 36, brings clean, fresh air to individual work stations for use during tapping/pouring.

Engineering Measurements--The supplied-air island system is designed to deliver a total of 4.25 m^2/s (9,000 cfm) of air or 0.85 m^3/s (1,800 cfm) to each of five outlets. The exit velocity at the outlets is designed to 8.53 m/s (1,680 fpm).

The main air supply duct is 76x76 cm (30x30 inches). The individual ducts to each outlet are 36 cm (14 inches) in diameter. Exit face velocities were measured at values close to the design velocity.

The following estimate of costs of construction for the makeup air-supplied islands was obtained:

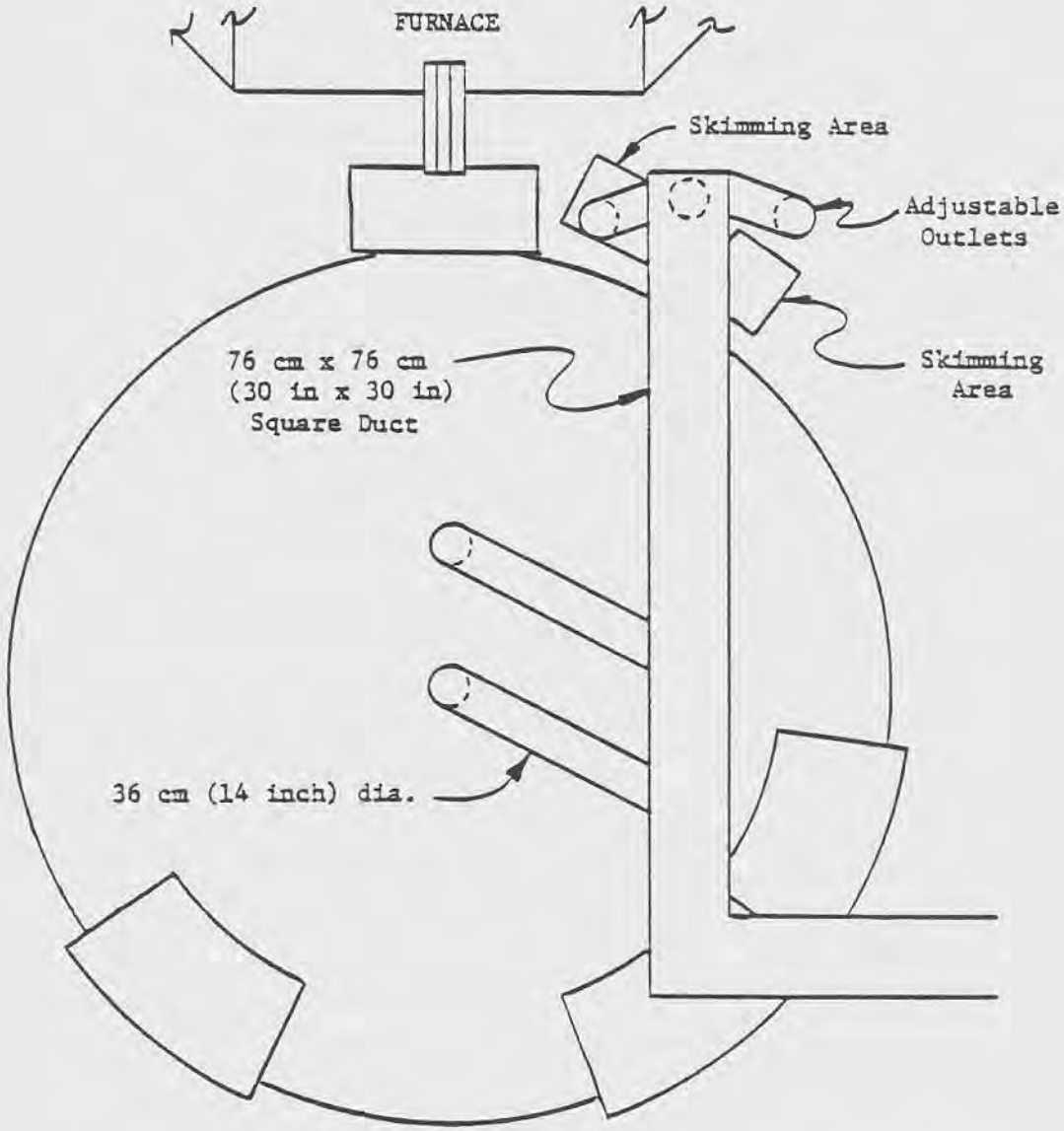

PLAN VIEW

Design Capacities and Description

$Q = 4.25\ m^3/sec$ (9000 cfm - 1800 cfm/outlet)

Fan: Radial, 1 HP motor

$V_{exit} = 8.53$ m/sec (1680 fpm)

$V_{plenum} = 7.32$ m/sec (1440 fpm)

Figure 36. Supplied air system.

Capacity: 4.25 m/s (9,000 cfm)
Cost: $2,100 per m/s ($1/cfm). Price includes motor, fan, ductwork, five outlets, and installation.

Observations--Visual observation of the makeup air system indicated that the volume of air supplied to the worker effectively provided relief from exposure to fume and steam emissions as well as the heat associated with the tapping/pouring operation.

Ingot Quench Exhaust System--
The ingot quench exhaust system shown in Figure 37 collects wet air and steam from the ingot quench areas. This separate system is used to keep moist air out of air streams containing particulate so that solid condensate does not form in the ductwork, and to bypass the baghouse since little particulate is contained in the air stream. Estimates of performance parameters are provided on the drawing.

Roof-Mounted General Ventilation Fans--
A large roof-mounted axial fan is provided as shown in Figure to draw uncaptured and upset fugitive emissions up and out of the work area. It was estimated that the fan was capable of exhausting about 14.2 m^3/s (30,000 cfm). No measurements were made.

Control Critique

The five separate ventilation systems used to control process flue gases, emissions during charging and pouring, and other fugitive emissions created effective employee exposure control. Each separate system serves a specific need and contributes to the overall effectiveness of emission/exposure control.

Filter samples of airborne fume were taken during all phases of furnace operation. Air monitoring methods included both area and personal breathing zone samples.

Air sampling was performed using MSA portable pumps and 37 mm Millipore AA cellulose acetate filters in closed-face, two-part Millipore cassettes. Filters were analyzed by atomic absorption spectrophotometry for lead and zinc.

Results of airborne sampling are presented in Table 11. Lead exposure control is not a good indicator of rotary furnace control effectiveness because of numerous lead sources in the vicinity of the rotary furnace operation.

OTHER HAZARDS AND USE OF PERSONAL PROTECTIVE CLOTHING AND EQUIPMENT

Employees assigned to the reverberatory and rotary furnace crews and other employees who operate materials handling equipment and perform maintenance near the furnaces may be exposed to hazards

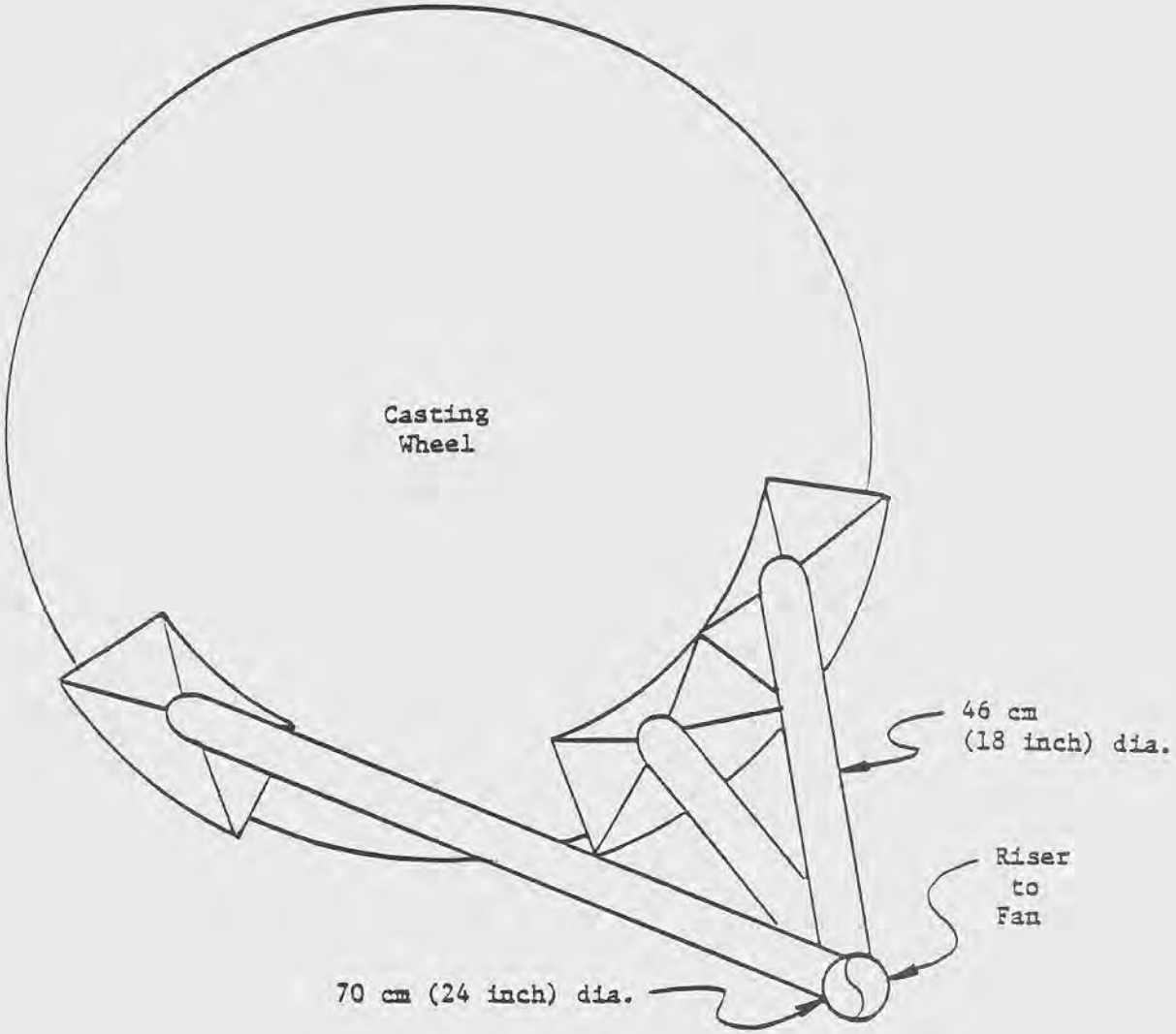

PLAN VIEW

$Q = 0.09$ m/s per m^2 face area (200 fpm/ft^2 face area)

$V_{branch} = 6.1$ m/s (1200 fpm)

$V_{main} = 10.2$ m/s (2000 fpm)

$\theta = 45°$

$C_e = 0.82$ (estimate)

Figure 37. Ingot quenching exhaust system.

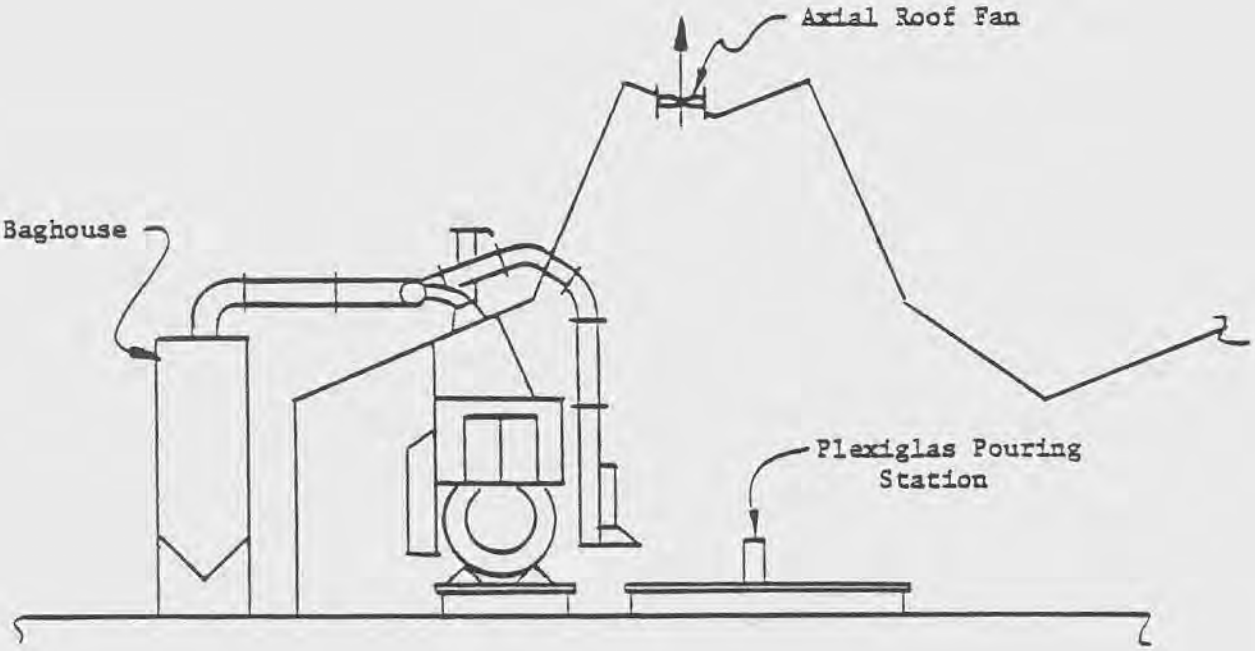

Q = 14.2 m^3/s (30,000 cfm) (estimate)

Figure 38. Axial fan: fugitive emissions exhaust system.

other than metal fumes and combustion gases from the furnace operations. These hazards include: possible contact with molten metal; exposure to excessive heat; exposure to harmful infrared radiation (IR); and exposure to noise. Due to the presence of these potential hazards, employees utilize a variety of personal protective clothing and equipment items to reduce the possibility of harmful exposure. Safe work practices are also employed to minimize risk of injury.

The potential for contact with molten metal is most significant during charging, air lancing and refining, slag removal, tapping, and pouring of the reverberatory furnace. Slag removal, tapping, pouring, and skimming offer most potential for contact with molten metal in rotary furnace operations. The following articles of protective clothing and equipment are worn routinely in these operations:

- Safety helmet
- Safety toe shoes with metatarsal protectors
- Safety spectacles with side shields (most with tinted lenses)
- Face shields (clear and tinted)
- Forearm covers
- Gloves
- Two pairs of trousers and two shirts worn one inside the other
- Leggings

Some of these articles are removed when tasks of lesser overall hazard are performed which do not present significant potential for contact with molten metal.

Employees working in the area of the scrap briquetting operation are not subject to most of the hazards found in the furnace building, i.e., molten metal, excessive heat, harmful infrared radiation, and excessive noise. Protective clothing worn by these workers consisted of:

- Safety helmet
- Safety toe shoes with metatarsal protectors
- Safety spectacles
- Gloves

No other personal protective equipment was observed to be worn in this area.

Safe work practices employed in hot metal operations include maintaining a covering of sand on floor areas where spills of molten metal are likely. The sand covering helps to minimize the splashing of metal. Employees working in high heat load areas relieve one another at frequent intervals to prevent excessive fatigue and heat stress.

Employees assigned to the furnace crew were experienced and presumably well acclimatized to the level of physical exertion and heat stress associated with their jobs. Heat stress and infrared radiation exposure measurements were not attempted at this smelter for a variety of reasons. These physical agents are not the focus of attention in this control technology assessment. It is extremely difficult to obtain meaningful exposure measurements with regard to these agents and the interpretation of any such measurements has been and continues to be the subject of much controversy in the occupational safety and health community. These agents were present in potentially harmful intensities; however, the employees and management appeared to have implemented a reasonable and prudent program of personal protection to minimize their potential deleterious effects.

Noise in the furnace building work areas is caused by a variety of equipment and operations. Furnace firing mechanisms and ingot handling were responsible for most noise, while roof-mounted axial exhaust fans and materials handling equipment contributed to background noise levels. In general, sound pressure levels measured in work areas associated with reverberatory and rotary furnace smelting ranged from 82 - 107 dBA. Highest steady noise levels were measured near furnace burners. Impact noises with peaks of 107 - 123 dBA were measured in association with ingot handling. In most all situations, employees were not wearing hearing protection devices. Efforts have been undertaken and are on-going to reduce noise in the workroom.

Use of respiratory protection devices in the furnace building was not required. A few employees were observed to be wearing single use, nuisance dust respirators at their own initiative. The limited sampling performed during this survey suggests that additional workplace evaluation should be conducted to determine whether employees are exposed above currently accepted limits for occupational exposure to lead. Should excessive exposure be confirmed, a comprehensive respiratory protection program would be necessary until exposures are reduced to acceptable levels through application of feasible engineering and administrative controls. The data collected during these studies do indiate that furnace crew employee exposures may be near or in excess of the present OSHA permissible exposure limit of 200 ug/m^3.

IN-DEPTH SURVEY II

SMELTER 1800

(Secondary Aluminum Smelter)

INTRODUCTION

This in-depth survey of a secondary aluminum smelter was prepared for the National Institute for Occupational Safety and Health by Radian Corporation. The objective of this in-depth study is as follows:

1. To describe the processes and operations of interest with an occupational health engineering discussion of the hazards and potential exposures associated with these processes.
2. To describe and evaluate the engineering control used to minimize worker exposure to the hazards and potential exposures identified.

Smelter 1800 is primarily a secondary aluminum smelter with smaller quantities of copper alloys also being produced. One production process involving scrap volume and size reduction was selected for evaluation at this smelter. This process involves the use of a "ring" type hammermill to crush aluminum and some copper and zinc bearing alloy scrap to convenient size for furnace charging.

The hammermill is located approximately in the center of the main production building and had been a very significant source of workroom noise. An enclosure was designed and constructed around the mill to reduce sound pressure levels in adjacent employee work areas. The enclosure and its effectiveness is the subject of this evaluation.

The objectives of the control evaluation were to:

- measure the noise reduction attained with the enclosure;
- evaluate the effectiveness of the enclosure in comparison to alternate methods; and
- propose further treatment for improved noise control.

HAMMERMILL SCRAP REDUCTION

EQUIPMENT AND CONTROLS

The hammermill is a "ring" type, driven by a 373 KW (500 horsepower) electric motor. It is equipped with exhaust ventilation which transports dust, grit, etc., to a cyclone dust collector located outside the main production building. Raw materials are delivered to the mill by a conveyor belt. The feed belt is loaded using a front-end loader. Milled scrap is transported away from the mill via conveyor belt. The milled scrap is screened, separated, etc.,

The hammermill has been enclosed in a room constructed of 20 cm (8-inch) concrete blocks. The ceiling to the room is pre-cast concrete. Figure 39 shows the approximate configuration of the hammermill, belt conveyors, and block enclosure. The enclosure is provided with two access doors and two pass-through openings for the feed and discharge conveyor belts.

The mill does not operate continuously but may run for several hours during a particular work day depending on the type and quantity of scrap received by the smelter. The scrap is sorted and fed to the mill in batches. For example, aluminum castings would be sorted from sheet aluminum scrap and fed through the mill in a segregated run.

One employee is required to operate the mill, conveyors, etc. Another employee operates the front-end loader which loads the feed conveyor. A third employee may manually handle some of the feed materials at the conveyor loading station.

EMISSION SOURCES AND POTENTIAL EXPOSURES

The potential hazard of primary concern to this control evaluation was exposure to excessive noise. The enclosure surrounding the hammermill was designed to help reduce noise exposures to employees. The noise still present at the operator's station and loading pit emanates from four main sources--the dumping of scrap into the loading pit; the conveyance of scrap to the mill; the operation of the mill; and the conveyance and screening of milled scrap. All of these sources produced impact-type noises. The following describes the impact character of these noises:

- the noise produced by scrap falling on the concrete floor and then onto the feed conveyor;
- the noise produced by scrap falling from one lift to another on the inclined feed conveyor;

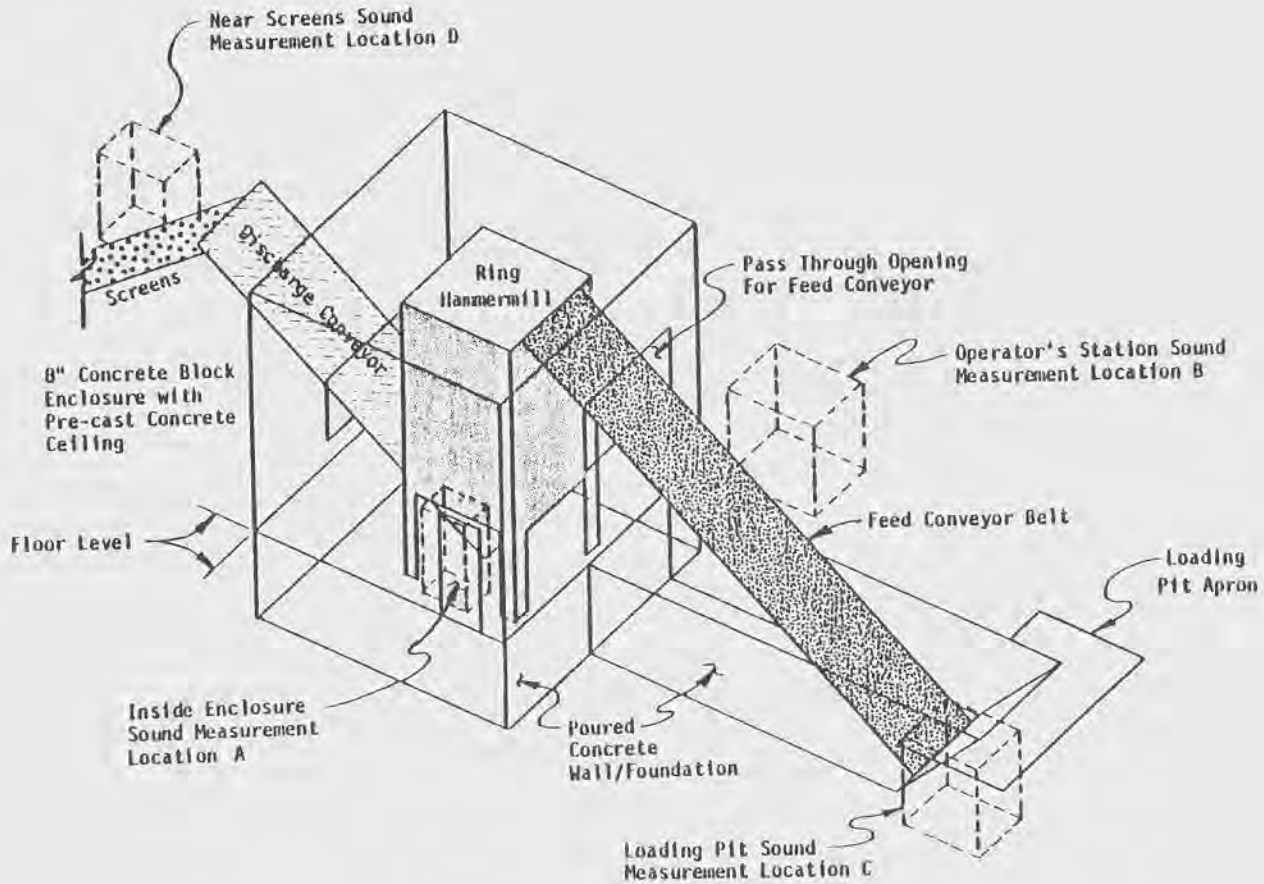

Figure 39. Hammermill noise enclosure.

- the noise produced by hammers in the mill as they chewed up the scrap; and
- the noise produced by the discharge conveyors and vibrating screens as the milled scrap was moved along and over the screens and fell into holding containers.

Employees are exposed to these noise sources on an intermittent basis. The mill is not operated continuously but when running, it requires the presence of at least two employees. One employee remains in an area near the control panel as shown in Figure 39. Another employee operates a front-end loader which delivers scrap to the loading pit. A third employee may work in the area of the loading pit. Other smelter employees may walk through the area near the mill enclosure but their routine work assignments do not require them to stay for any significant period of time. Hearing protection devices were made available to employees at this smelter; however, many elected not to utilize this form of control.

Control Evaluation

The noise produced by the hammermill and associated equipment was evaluated using the following equipment:

- Bruell and Kjaer Sound Level Meter, Model 2203
- Bruell and Kjaer Octave Band Filter, Model 1613
- Bruell and Kjaer Piston Phone Calibrator, Model 4420
- General Radio Sound Analyzer, Model 1521 B
- Uher Tape Recorder, Model 4000 L
- GR Impact Noise Analyzer, Model 1556 A

Sound level measurements were made inside the hammermill enclosures, outside the enclosure at the operator's work station, at the feed conveyor loading station, and near the screens following the discharge conveyor. The approximate locations where these measurements were made are shown in Figure 39. Table 12 contains all of the significant measurements made at the smelter.

The measurements made inside the mill enclosure show that the mill produces 86 dBA at idle. While crushing cast aluminum, the noise inside the enclosure ranged from 105 - 115 dBA. Octave band analysis of the noise produced by the mill during crushing showed that highest noise levels were present in the 2,000 and 4,000 Hertz octave bands (109 and 108 dBA, respectively). This noise was created by the mill hammers, motor drive, and scrap feed. The mill hammers contributed the overwhelming majority of the noise present.

Noise measurements made at the operator's work station outside the block enclosure ranged from 94 - 104 dBA (see Figure 39). The e primary source of noise at this work station was the hammermill sound emanating through the feed conveyor opening in

Table 12. Sound Level Measurements

Number and Location	F/S	dBA	dBC	Octave Band 31	63	125	250	500	1000	2000	4000	8000
A Inside Mill Enclosure												
Idle	S	86	104									
Crushing		105-115	108-116	95	100	98	95	98	95	109	108	102
B Operator's Station												
Crushing	S	94-104	90-108	88	88	89	87	85	85	85	86	86
Idle Background	S	72-77										
C Feed Conveyor Loading Pit												
Background	S	72-77										
Average Feed	S	86-87										
Peak Feed	S	97-116										
Dumping Scrap	S	108										
D Near Screens												
Idle	S	88	93	90	88	88	85	84	83	80	78	79
Operating	S	90	95-100									

the block enclosure. Relatively less noise was contributed by scrap on the feed conveyor and the intermittent sound of dumping scrap onto the feed conveyor at its loading station. Background noise with the mill idling and the feed conveyor empty was measured to range from 72 - 77 dBA at the operator's work station.

The reduction of the noise at the operator's work station afforded by the existing block enclosure is approximately 11 dBA. This reduction was evidenced in both the lowest noise levels (105-94= 11 dBA) and the highest noise levels (115-104=11 dBA) measured inside the enclosure and compared to measurements made at the operator's work station.

This 11 dBA reduction of noise at the operator's station, provided by the existing concrete block enclosure, is a substantial improvement over no enclosure. However, due to openings in the enclosure, the amount of noise reduction realized is substantially less than what theoretically could be obtained by a similar block enclosure with no openings (i.e., approximately a 45 dBA reduction).

The block enclosure does not reduce noise produced along the feed conveyor or at the feed conveyor loading point. The noise from the feed conveyor as measured along the conveyor was approximately 86 - 87 dBA with peaks to 97 dBA. The noise from dumping scrap at the belt loading station was measured to be 108 dBA at a location near the pit (see Figure 39). However, this noise is very intermittent and would not contribute as significantly to time-weight-average (TWA) exposure as would the noise from the hammermill.

CONTROL CRITIQUE

There are several modifications which could be made to the existing enclosure to improve noise reduction at the operator's work station. A few examples of these modifications will be presented with estimates of their associated costs. In addition, estimates of noise reductions offered by different types of enclosures will be discussed. It should be mentioned at the outset that combinations of the various types of treatment discussed could result in more or less noise reduction than the specific control configurations discussed here for illustrative purposes.

Example Modification Number 1

Provide flexible overlapping curtains for openings where the feed conveyor enters the block enclosure.

A noise reduction at the operator's work station of approximately 6 dBA could be achieved by installing flexible acoustic curtains

over the field conveyor entrance to the block enclosure. This treatment would reduce noise levels produced by the mill to approximately 88 - 98 dBA at the operator's work station. This treatment would only serve to reduce the noise generated by the hammermill and would not reduce the operator's exposure to noise produced by scrap on the feed conveyor or by dumping scrap at the belt loading station.

To be effective the curtains would have to enclose the feed conveyor opening as tightly as possible. Curtain material would have to be fitted along the sides and underneath the conveyor. It could be installed in overlapping strips above the conveyor to allow passage of materials on the belt.

The curtains could be fabricated from reinforced, loaded vinyl weighing approximately 4.9 kg/m^2 (1 lb/ft^2). Where installation of strips is necessary they should be generously overlapped. An expenditure of approximately $300 - $500 would be necessary to install this treatment on the feed conveyor opening.

Similar treatment could be installed at the opening for the discharge conveyor; however, this treatment would afford little benefit at the operator's work station. Since employees do not work in the area near the discharge conveyor and screens, treatment of the discharge conveyor opening would be of much lower priority.

Example Modification Number 2

Provide an acoustic tunnel over the feed conveyor which would extend slightly into the block enclosure.

An acoustic tunnel could be added to the existing enclosure approximately as shown in Figure 40. This tunnel would provide an estimated 6 dBA reduction in noise levels at the operator's work station resulting in noise levels of 88 to 98 dBA. This enclosure would provide more reliable reduction of hammermill noise emanating from the feed conveyor opening in the block enclosure and would also help control noises from the scrap on the feed conveyor. The intermittent noise produced at the conveyor loading pit would remain largely uncontrolled.

The tunnel could be constructed of metal panel of 10 cm (4-inch) thickness. The panels would be smooth on the outside and perforated on the inside. The metal panels would be filled with dense mineral wool. An acoustic tunnel of this type, constructed of the materials just mentioned, could be purchased and installed for approximately $4,000.

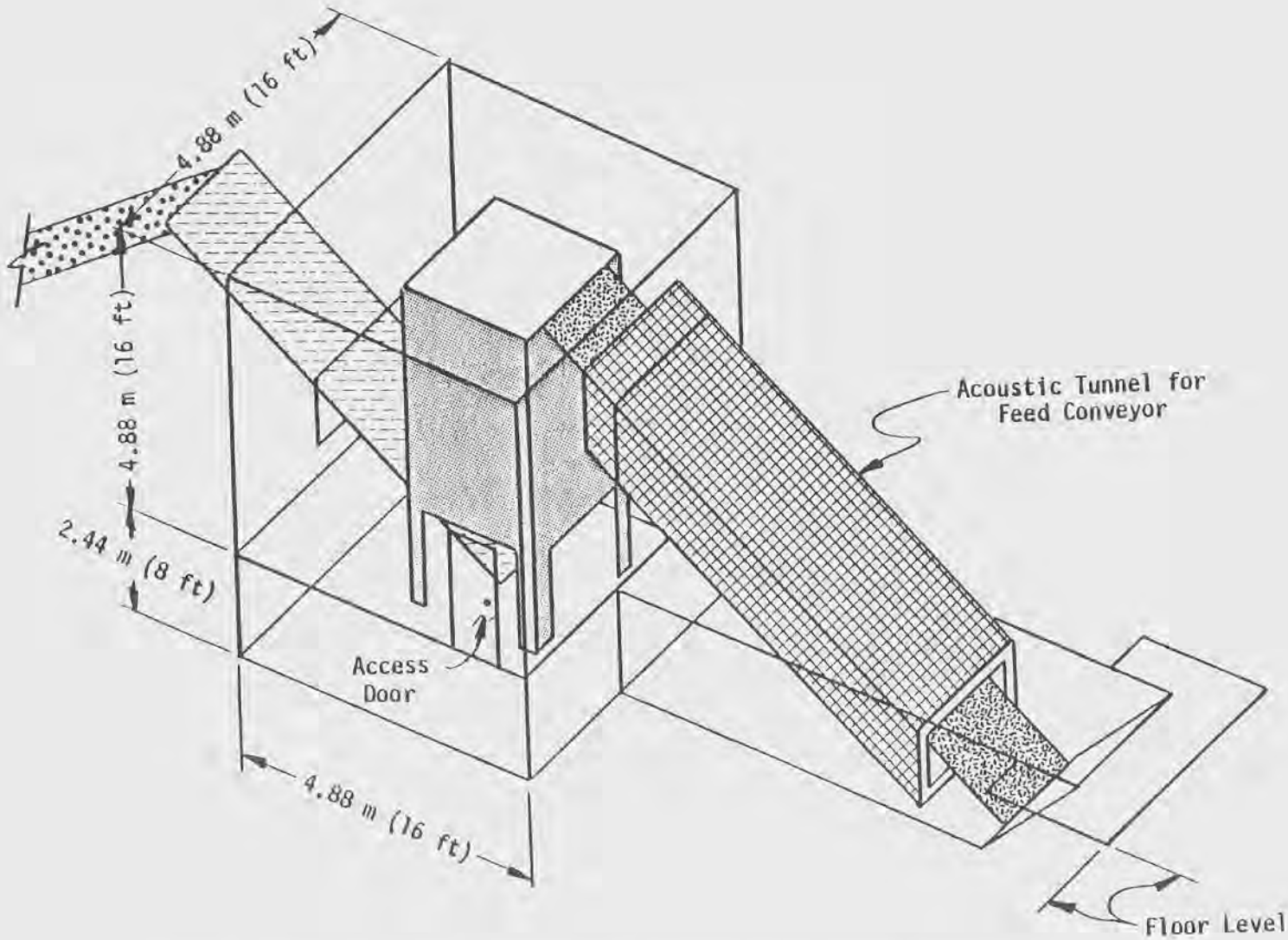

Figure 40. Acoustic tunnel for hammermill feed conveyor.

Example Modification Number 3

Line the existing enclosure with sound adsorbing materials and dampen vibrating surfaces on hammermill structure.

The existing enclosure could be lined with sound absorbing materials (e.g., 2.5 cm (1-inch) thick, 0.7 kg (1 1/2 lb) density fiberglass duct liner protected with 1-inch mesh screen wire) and the vibrating surfaces of the mill treated with dampening (e.g., 2.5 cm (1-inch) thick, 2.7 kg (6 lb) density fiberglass covered with loaded vinyl). This treatment would not reduce the noise produced by the scrap on the feed conveyor or at the conveyor loading pit, but it would reduce the sound within the mill enclosure and emanating from the feed conveyor opening by approximately 11 dBA. Thus, the noise at the operator's work station caused by the mill would be reduced to approximately 83 - 93 dBA. The acoustic lining and dampening treatment described could be installed for approximately $1,800.

Example Modification Number 4

Construct enclosure with sound absorbing blocks rather than regular concrete blocks.

Had the enclosure been constructed from sound absorbing blocks with the same conveyor belt openings and sound absorbing doors, the noise from the mill could have been reduced approximately 9 dBA at the operator's station (i.e., down to 85 - 95 dBA). This type of enclosure would not affect the noise from the scrap on the conveyor or from the dumping of scrap at the loading pit.

For an enclosure of this size the sound blocks would have cost approximately $1,000 more than regular concrete blocks. Installation costs would have been virtually identical. No tunnels, curtains, etc., are included in this example.

Example Modification Number 5

Construct enclosure with sound absorbing panels rather than with regular concrete blocks.

Had the enclosure been constructed of prefabricated 10 cm (4-inch) thick metal panels as described for use in the acoustic tunnel, a noise reduction of approximately 10 dBA could be obtained at the operator's work station (i.e., down to 84 - 94 dBA). The example assumes sound absorbing doors would be used, and openings similar to those in the existing structure would be provided for feed and discharge conveyors. Again, this structure would not reduce noise from the scrap on the conveyor or from scrap dumping at the loading pit. An enclosure of this type could be constructed for approximately $6,300.

Control Combinations

As stated at the beginning, a variety of treatment combinations are possible. Adding curtains or tunnels to improved enclosures would obviously enhance control. Noise produced at the feed belt loading pit could be reduced by installing a barrier between the operator and the pit. A better beginning approach would be to change the loading operation to reduce the distance the scrap falls when depositing it in the pit or on the apron in front of the pit.

IN-DEPTH SURVEY III

SMELTER 1205

(Secondary Brass and Bronze Smelter)

INTRODUCTION

This in-depth survey of a secondary brass and bronze smelter was prepared for the National Institute for Occupational Safety and Health by Radian Corporation. The objectives of this in-depth study are as follows:

1. To describe the processes and operations of interest with an occupational health engineering discussion of the hazards and potential exposures associated with these processes.
2. To describe and evaluate the engineering controls used to minimize worker exposure to the hazards and potential exposures identified.

Smelter 1205 is primarily a secondary brass and bronze smelter with much smaller quantities of zinc and lead alloys also being produced. The process and controls studied at this smelter were the rotary furnace smelting process and the engineering controls used to reduce worker exposure during such phases of the process as charging, tapping, and casting. The major controls of interest are:

- the hot flue gas system which also controls emissions from the charging door;
- the tapping hood system which controls emissions during the tapping operation; and
- the casting ladle hood system which controls emissions from the holding ladle and the mold casting operation.

These systems are discussed in the next section.

ROTARY FURNACE SMELTING

DESCRIPTION OF EQUIPMENT AND CONTROLS

The process equipment studied consists of an 18,180 kg (40,000 lb) capacity, steel jacketed, brick-lined rotary furnace, schematically depicted in Figures 41, 42, and 43. Rotary furnace smelting operations are used to produce brass and bronze alloys containing primarily copper, lead, zinc, and tin. Relatively smaller quantities of other metals are also included in alloy formulations.

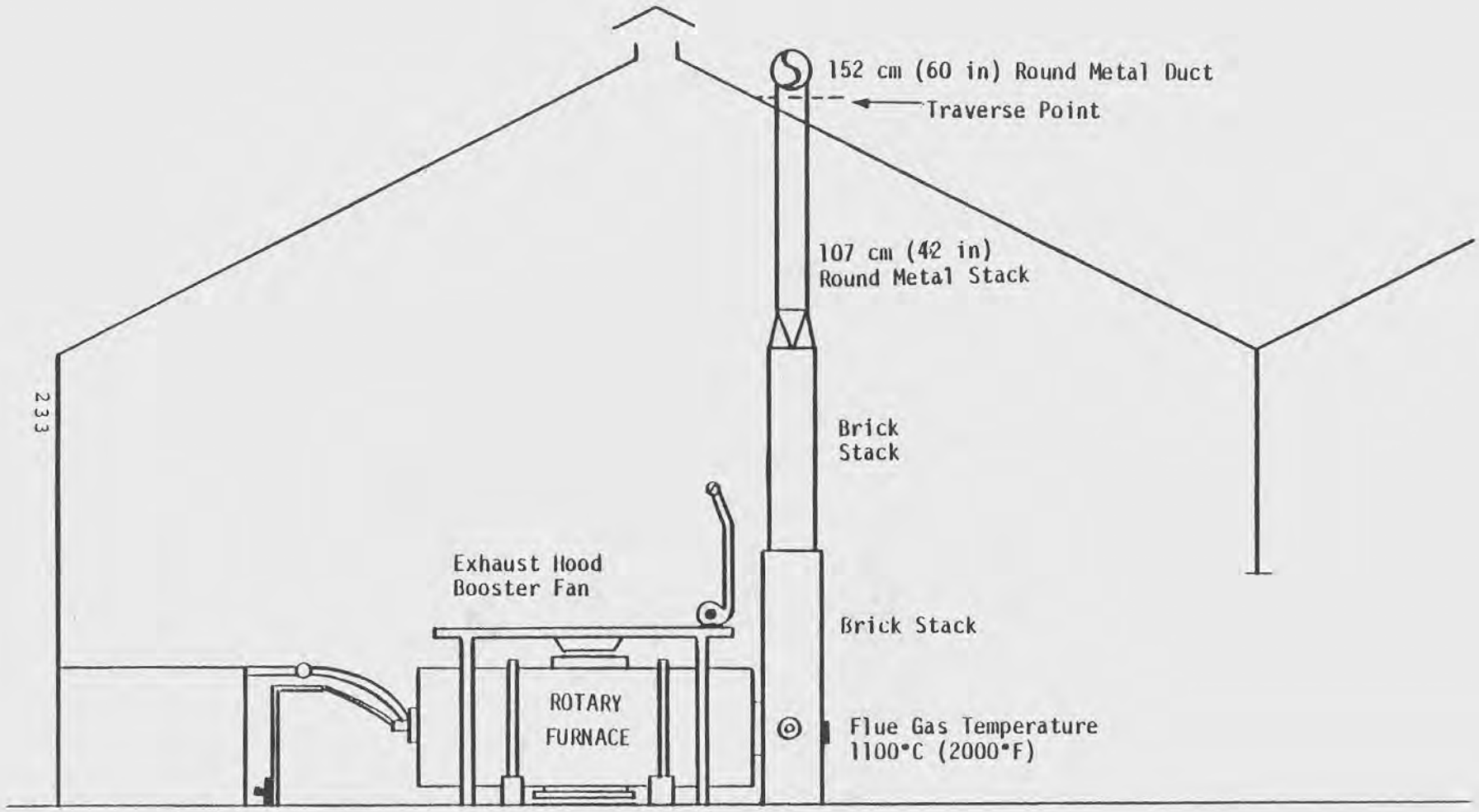

Figure 41. Approximate location of rotary furnace in production building.

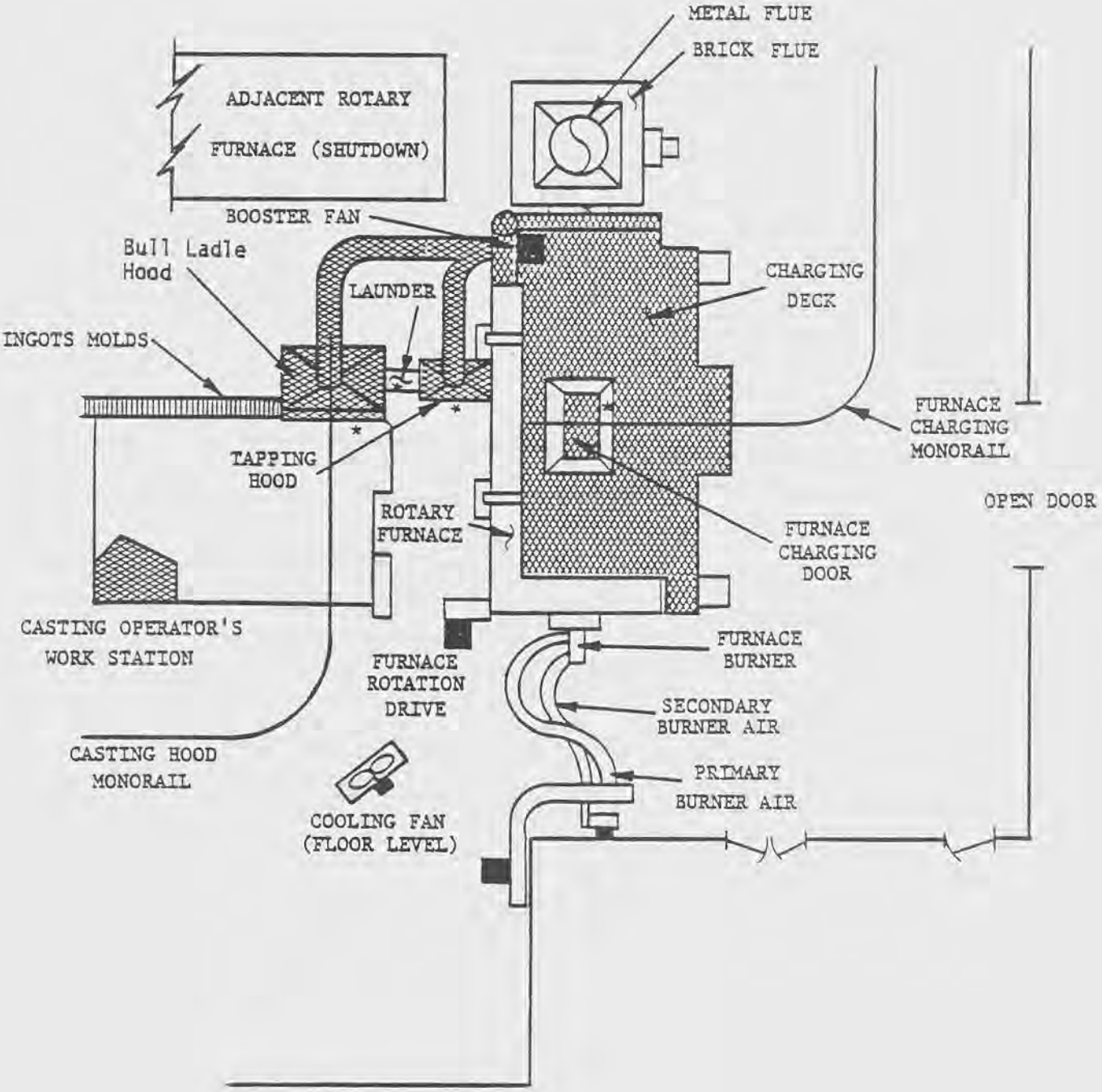

Figure 42. Rotary furnace - process layout.

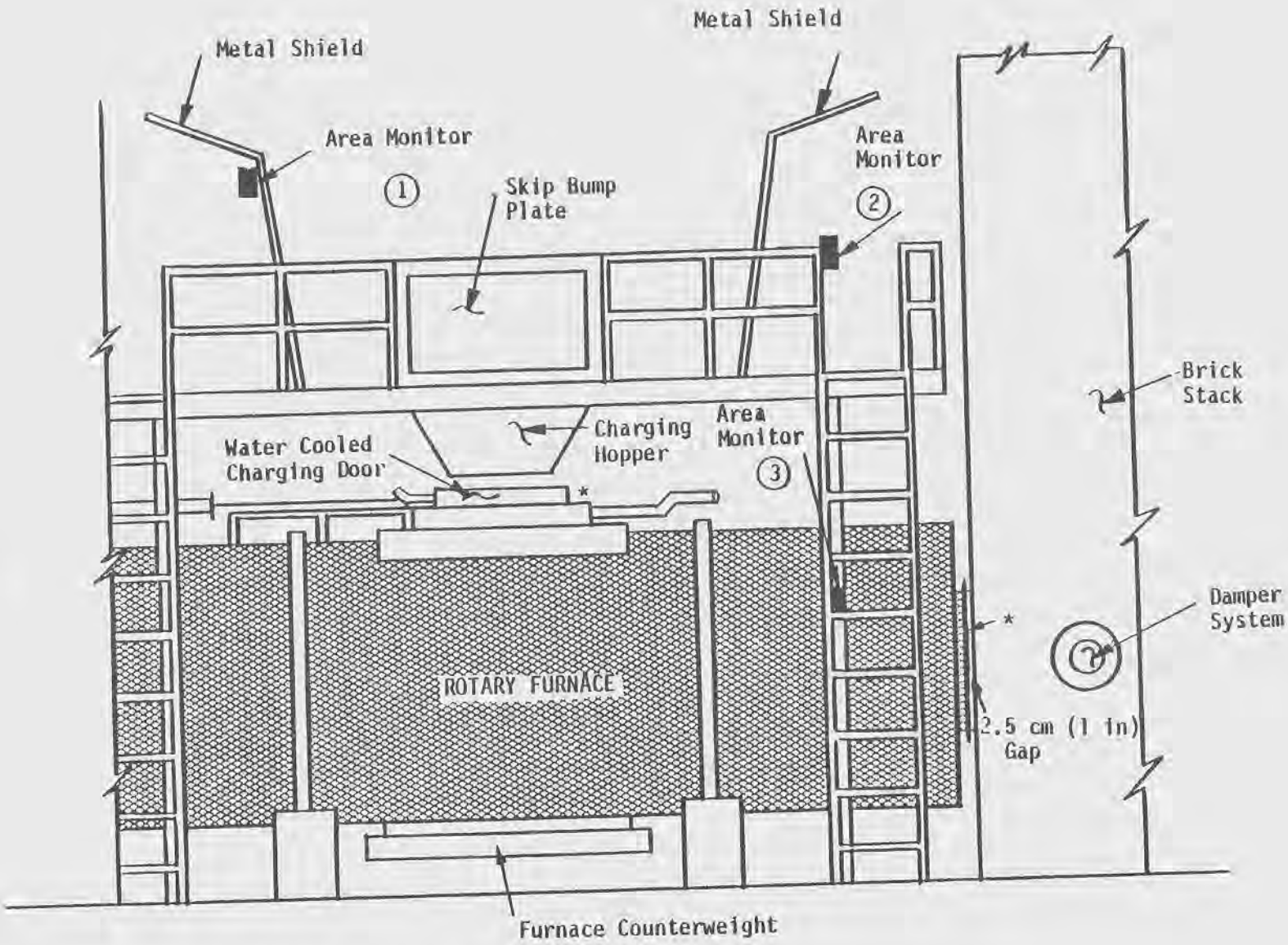

* Fugitive Emission Source

Figure 43. Rotary furnace - charging side elevation.

This furnace is end-fired by a fuel oil burner. The burner is provided with both primary and secondary air systems as shown in Figure 42. Hot combustion gases and emissions from the melt (metal fumes, smoke, etc.) are drawn into an exhaust gas collection system opposite the burner end of the furnace. This system employs a brick stack for the first several meters and then continues with steel ductwork (see Figure 41). Exhaust gases are ducted to a baghouse for particulate removal and then released to the ambient environment.

The furnace is top-charged using skips which are loaded at ground level, lifted using a monorail-mounted hoist, and dumped into the charging port of the furnace. Emissions from the charging port are controlled by the draft created by the exhaust gas (flue gas) control system. When the charging door opens, the exhaust gas collection system causes air to flow into the charging port with the charge material.

The charging door and jamb are water cooled. This provision minimizes warpage and facilitates the maintenance of a tight fit. The charging port is not equipped with a local exhaust hood.

The furnace tapping port and associated bull ladle and casting station are equipped with local exhaust ventilation (see Figure 42). The contaminated air collected by these hoods is combined with the furnace exhaust gases and passes through the baghouses.

Slag removal is accomplished by rotating the furnace approximately 90° until the charging port is positioned at the side of the furnace. Slag is hoed out of the charging port into slag ladles. The furnace exhaust gas collection system is used to help control emissions (from the furnace) during slagging. The slag receivng ladles are not provided with local exhaust ventilation.

A crew of three employees (one melter and two tenders) is assigned to the rotary furnace smelting area. The furnaces operate on 12-hour cycles. Typically, charging occurs during the early part of the day shift with additions of materials continuing through the shift as necessary. Refining continues into the evening shift and the furnace is poured. Charging and pouring are done again late during the evening shift.

DESCRIPTION OF EMISSION SOURCES AND POTENTIAL EXPOSURES

Potentially toxic air contaminants can be emitted from the rotary furnace smelting process into the working environment during a variety of smelting operations. The primary hazard involved is employee exposure to metal fumes consisting of zinc oxide, lead oxide, copper, tin, etc. The following fugitive emission sites were visually identified during the study (these are shown by an asterisk (*) on Figures 42 and 43.

The Charging Door

Emissions from the charging door occur primarily during charge meltdown and upset conditions. During these operations very brief "puffs" or periods of positive pressure occur in the furnace which cause emission of air contaminants between the charging door and jamb. Under normal operating conditions sufficient draft is maintained on the furnace by the exhaust gas collection system to cause air to flow into the furnace through the space between the charging door and jamb. During charging and slagging (when the charging door is opened), air is drawn into the furnace to control fugitive emissions. Any air contamination which escapes from the charging door diffuses into the general work environment. Thermal propulsion usually carries this contamination up past the charging deck where it is diluted by workroom air. The contaminated air may eventually enter a local exhaust ventilation system or exit the building through the roof monitor located in the ridge of the building or through building doors and windows. Fugitive emissions from the charging door would normally be substantially diluted before reaching the breathing zones of workers. Should these emissions occur while employees are working on the charging deck (see Figures 43 and 44), the potential for more concentrated exposure exists. A similar situation exists during slagging or melt inspection when the furnace is rotated so that the charging door is positioned at the side of the furnace. Due to the lack of local exhaust ventilation for slag ladles, more concentrated air contamination may be experienced.

Exhaust End of the Furnace

Emissions occur from the exhaust end of the furnace, particularly during high firing rate periods such as charge meltdown and during upset conditions. A 1 - 2 cm (1-inch) gap between the flange on the furnace and the brick stack is the source of these emissions (refer to Figure 43). At the time the survey was performed, the gap between the furnace and stack was clean and free of accretions. Any air contamination which escapes from this gap would be diluted in the work environment as described in the preceding paragraph. No employees are regularly stationed near this source during melting and refining. The charging employees may be exposed during charging since they work on the charging deck and near the brick stack at ground level.

Slag Ladle

As mentioned earlier, the slag removal operation is only controlled by the draft through the charging door caused by the furnace exhaust gas collection system. Once molten slag and some alloy metal are deposited in the slag ladle, air contamination escapes into the work environment and is diluted. Slag removal usually requires only several minutes to complete. Once filled,

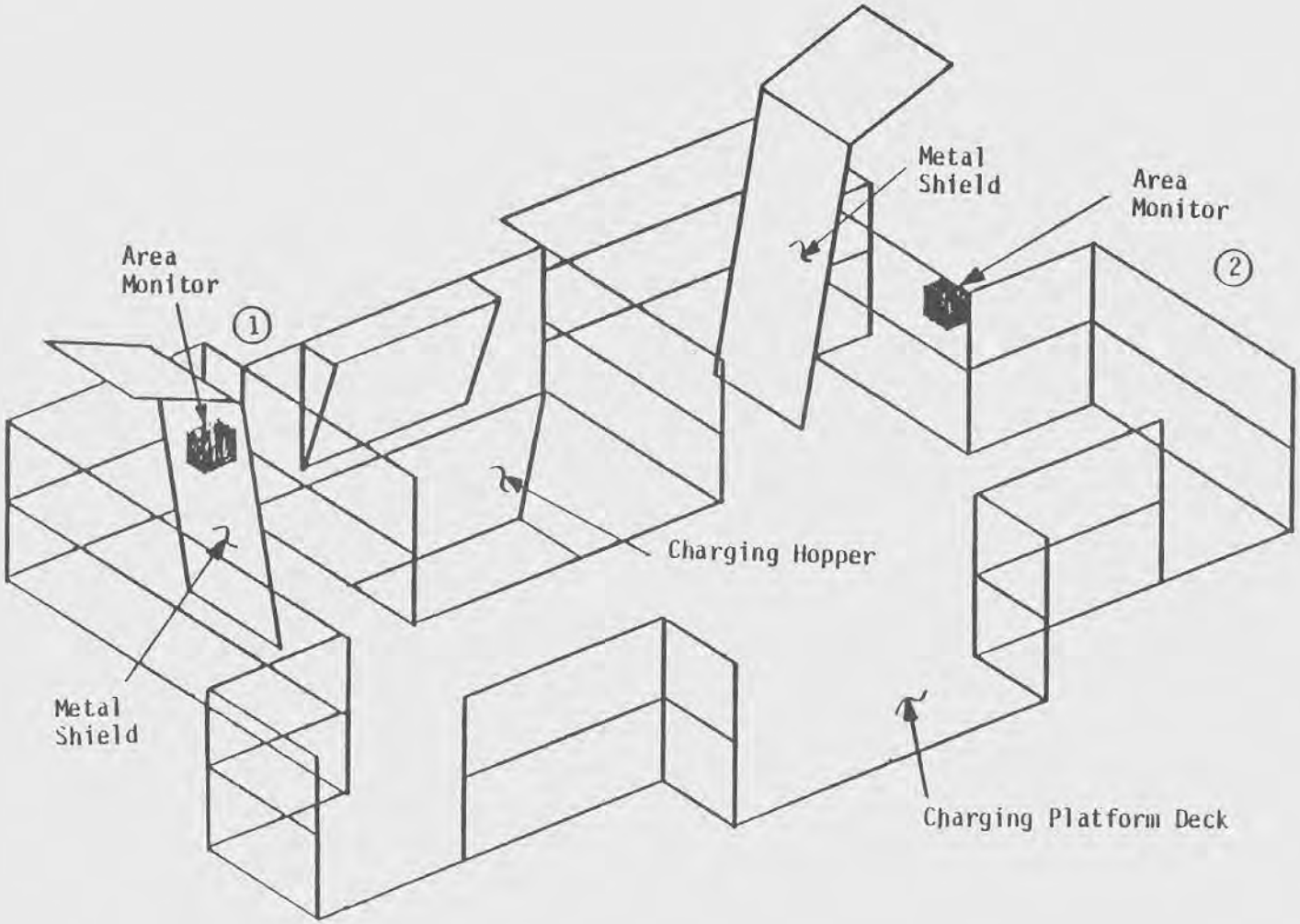

Figure 44. Rotary furnace - charging platform.

slag ladles are moved to an unoccupied area of the production building where it cools and solidifies. Employees were observed to be exposed to visible zinc oxide emissions from the slag ladle during slag removal from the furnace and during movement of the full slag ladle to a remote portion of the building.

The Tapping Port and Launder

Emissions also occur during tapping and pouring. The furnace is tapped and the molten metal pours into a launder which leads to the bull ladle at the casting line. This launder is covered with a plate to minimize emissions. Employees performing the tapping/pouring and casting operations are potentially exposed to metal fumes from the launder. A local exhaust hood is provided over the tapping port to capture the majority of the air contamination emitted from this source (see Figures 45 and 46). Fugitive emissions which escape this hood rise under thermal propulsion and are diluted in the workplace.

The Mold Pouring Location

Emissions occur from the mold pouring location during the tapping/pouring and casting operations. This location is provided with a local exhaust hood to control the majority of the emissions (see Figures 42 and 45). The employees performing the tapping/pouring and casting operations are potentially exposed. Fugitive emissions which escape this hood rise under the influences of thermal propulsion and are diluted in the workroom air.

The Ingot Molding Line

After pouring, the molten metal in each of the ingot molds emits metal fume. These fumes are reasonably controlled by the hood serving the bull ladle while the molds are under or in front of this hood. As casting continues, the poured molds travel away from the bull ladle hood and are exposed for a short distance before they enter an area covered by metal plate (see Figure 46). Fugitive emissions from underneath the mold line cover plates rise into the workplace air and are eventually diluted.

ENGINEERING CONTROL EVALUATION

Rotary furnace controls were evaluated using three basic types of information: engineering measurements and design considerations; observations; and air sampling information. These types of information will be discussed where applicable in conjunction with the controls evaluated.

Flue Gas/Charging Control System

The rotary furnace flue gas control system consists of a brick-lined flue which connects to steel ductwork leading to two

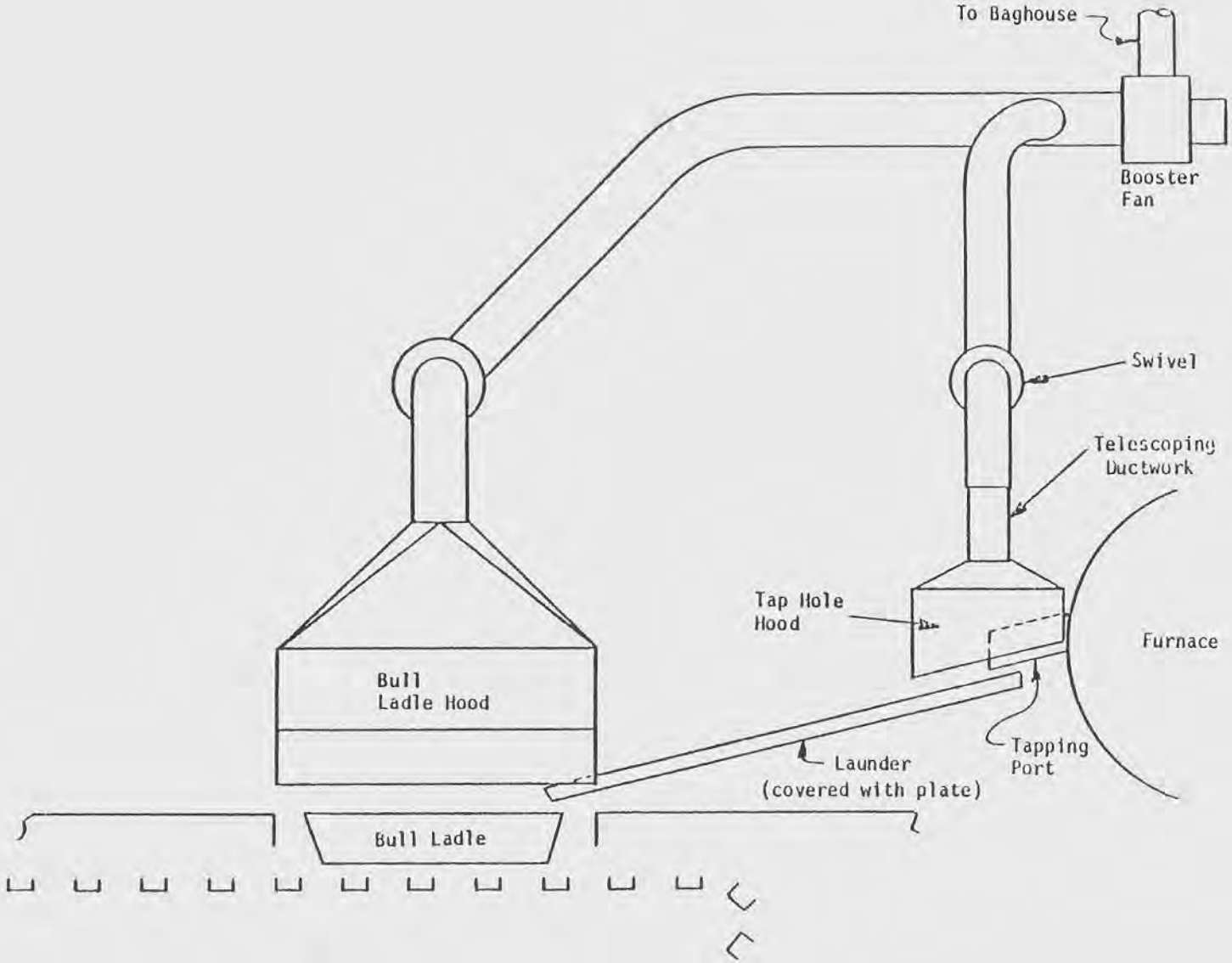

Figure 45. Bull ladle hood, tap hole hood, and booster fan.

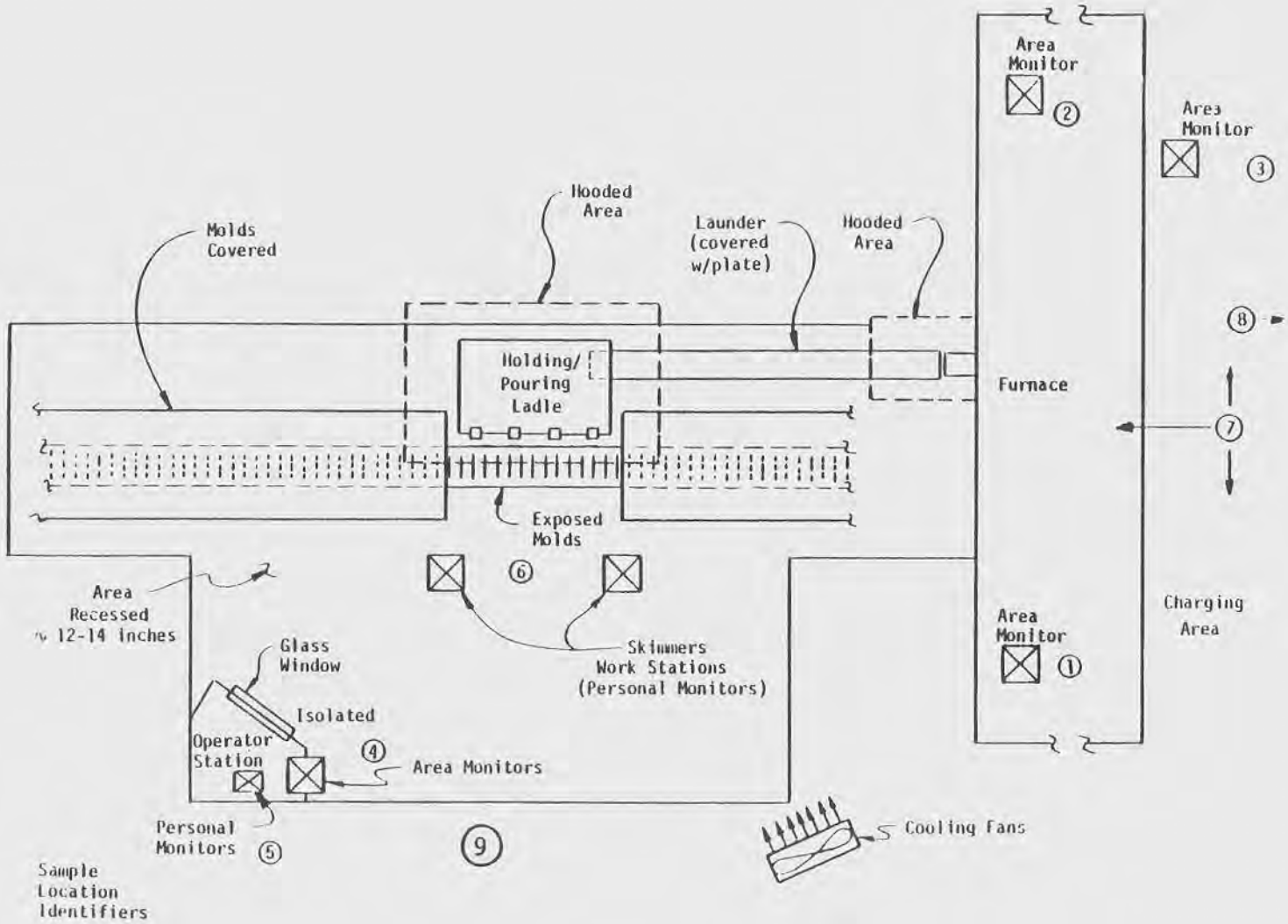

Figure 46. Pouring, skimming, and charging work areas.

baghouses (see Figure 41). Radiation cooling is relied upon to achieve most of the gas cooling required before the baghouses. The flue gas stream is kept separate from other cooler exhaust air streams until maximum benefit from radiation cooling has been realized. Then the exhaust air streams are combined. Dilution air is added to obtain final cooling. A water spray system is available should increased cooling requirements be encountered.

Two baghouses serve the rotary furnace flue gas and local exhaust hood systems. These baghouses also handle exhaust air from other furnaces and hood systems. The flue gas control system is used to control emissions produced during the furnace charging and slagging operations by providing sufficient draft to capture the emissions before they can exit through the charging door. The furnace flue is provided with a damper which can be adjusted to allow in-flow of dilution air to reduce the furnace draft during high firing periods such as charge meltdown. (This damper is shown in Figure 43.) During these periods the charging door is closed. The charging door and jamb are water cooled to minimize warpage, thereby providing a good seal (see Figure 47). A tight seal reduces the amount of in-flowing air necessary to control emissions and therefore improves control. The tight fitting doors also help to minimize emissions during process upset or high firing when brief periods of positive pressure are experienced within the furnace.

Engineering Measurements--
The rotary furnace flue gas control system is served by two baghouses with rated capacities of 17.5 m^3/s (37,000 cfm) and 9.4 m^3/s (20,000 cfm). The larger baghouse is used for both red and white metal air contaminant controls and is available mainly for upset conditions or when shaking or changing bags is taking place in the smaller baghouse. The smaller baghouse has six chambers with 16 46-cm (18-inch) diameter bags 6 m (20 feet) long per chamber. The larger baghouse has seven chambers with 33 46-cm (18-inch) diameter bags 9 m (30 feet) long per chamber. Four of the seven chambers in this larger baghouse are allocated to the copper-based alloy production control systems. The flue dusts collected from both baghouses are screw conveyed to hoppers and stored until they can be sold. Flue dust is not recycled at this smelter.

A modified S-type pitot tube and bimetallic thermocouple were used to make measurements inside the metal flue leading away from the rotary furnace. As shown in Figure 48, measurements were made above the roof line of the production building at a point near where the stack from the rotary furnace joins a larger round exhaust duct. Measurements were made while the furnace was being fired at a normal rate and both baghouses were operating.

The static pressure inside the stack was measured to range from 0.89 - 0.91 cm H_2O (0.35-0.36 in H_2O) during the measurement

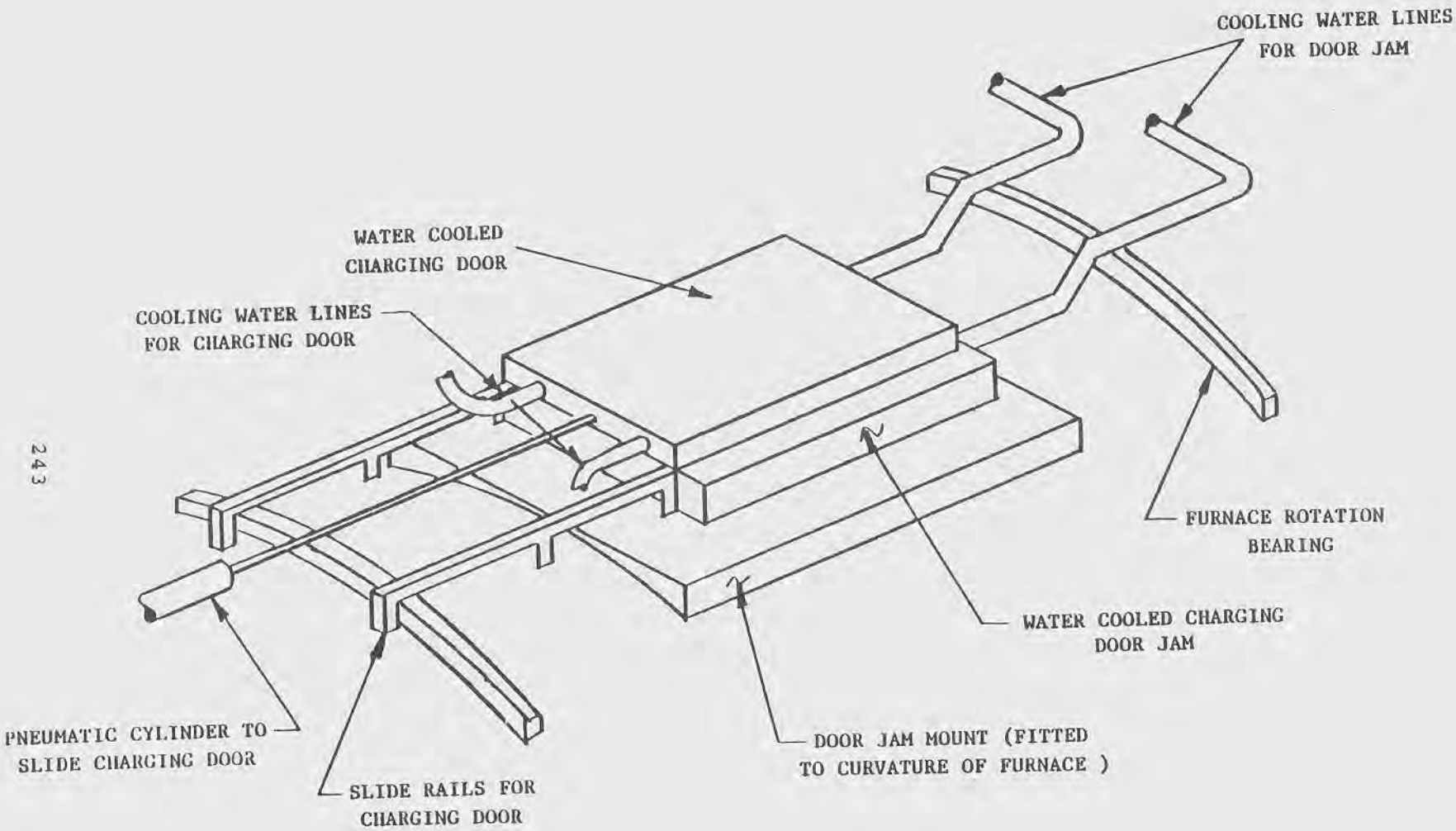

Figure 47. Rotary furnace - water cooled charging door.

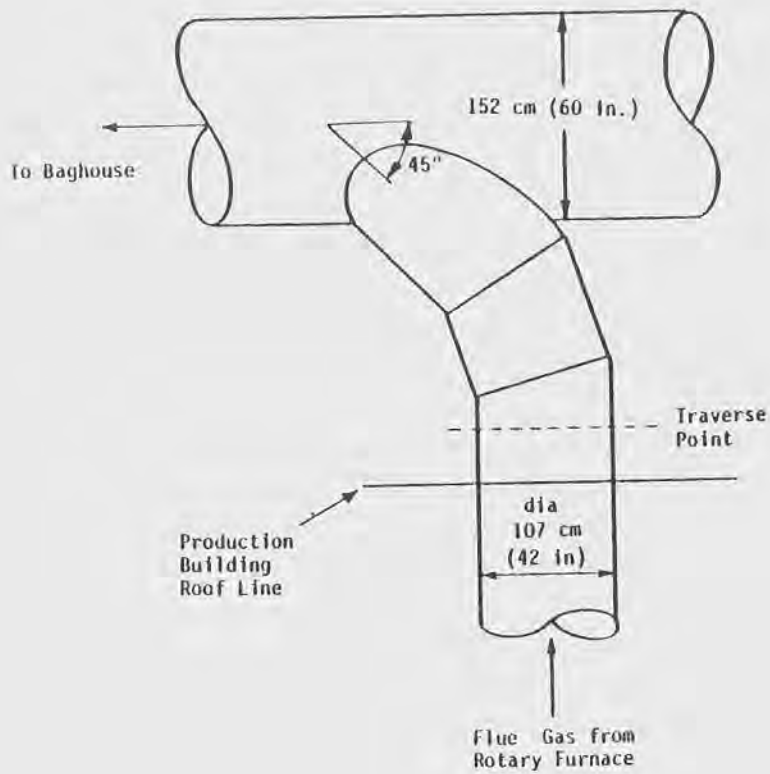

	TEST No. 1	TEST No. 2
T_{stack} °C (°F)	415 (780)	560 (1040)
SP_{stack} cmH_2O (in H_2O)	-0.89 (-0.35)	-0.91 (-0.36)
Air Velocity mps (fpm)	6.60 (1300)	6.10 (1200)
$Q_{stack\ conditions}$ m^3/s (cfm)	6.13 (13,000)	5.19 (11,000)
$Q_{std.\ conditions}$ m^3/s (cfm)	2.60 (5,500)	1.84 (3,900)

Note: Air velocity was determined using a modified Type S pitot tube and manometer. A twenty (20) point traverse was performed along one (1) flue diameter. Velocity pressure readings were taken during pitot tube insertion and withdrawal during each test.

Figure 48. Rotary furnace - flue gas measurements.

period. The air transport velocity in the stack was measured to range from 6.1 - 6.6 m/s (1,200-1,300 fpm). Temperature in the duct ranged from approximately 415 - 560°C (780-1,040°F) during the period pitot tube measurements were made. Using the cross sectional area of the stack, the air velocity measurements translate into an air flow rate of approximately 5.2 - 6.1 m^3/s (11,000-13,000 cfm) at stack conditions. Applying temperature and pressure corrections this air flow rate is equivalent to 1.8 2.6 m^3/s (3,900-5,500 cfm) at standard conditions.

Gas temperature and static pressure measurements were made at the base of the stack a few minutes after pitot tube measurements were completed. Static pressure was approximately -1.5 cm H_2O (-0.6 in H_2O). Gas temperature was approximately 1,100°C (2,000°F).

Air velocity measurements were made at the charging deck level above the rotary furnace charging door shortly after stack air flow measurements were made (see Figure 49). Both baghouses were in operation serving the rotary furnace and other systems. During these measurements furnace charging conditions were simulated. Primary burner air was cut off, the charging door was opened, and the velocity of air flowing down through the charging hopper into the furnace was measured using a swinging vane anemometer. Due to the extreme radiant heat these measurements were necessarily performed in rapid succession. Measured air velocities ranged from 0.25 - 0.51 m/s (50-100 fpm). This translates to approximately 1.0 - 2.1 m/s (200-400 fpm) at the face of the bottom of the charging hopper. Given the proximity of the bottom of the hopper to the charging door, a control velocity at the charging door of approximately 1.0 - 2.1 m/s (200-400 fpm) can be estimated. Actual measurments at the charging door could not be obtained. Assuming this estimated control velocity and knowing the configuration of the hopper and charging door, an estimated air flow rate into the furnace was developed and is approximately 1.2 - 2.4 m^3/s (2,500-5,000 cfm).

The water cooled charging door is remotely operated from a station where furnace burner firing rate can also be regulated. Water to cool the charging door and its jamb is cirulcated by thermosiphon to a tank located on the roof of the production building. Figure 47 shows where the water hoses attach to the door and jamb. Sections of flexible hose connect to rigid wall pipe which connects to the holding tank. The flexible hose is necessary to permit rotation of the furnace and relatively free sliding of the charging door.

Water circulated in the thermosiphon system picking up heat from the door and jamb and releasing it to the ambient environment through emission of steam from the holding tank.

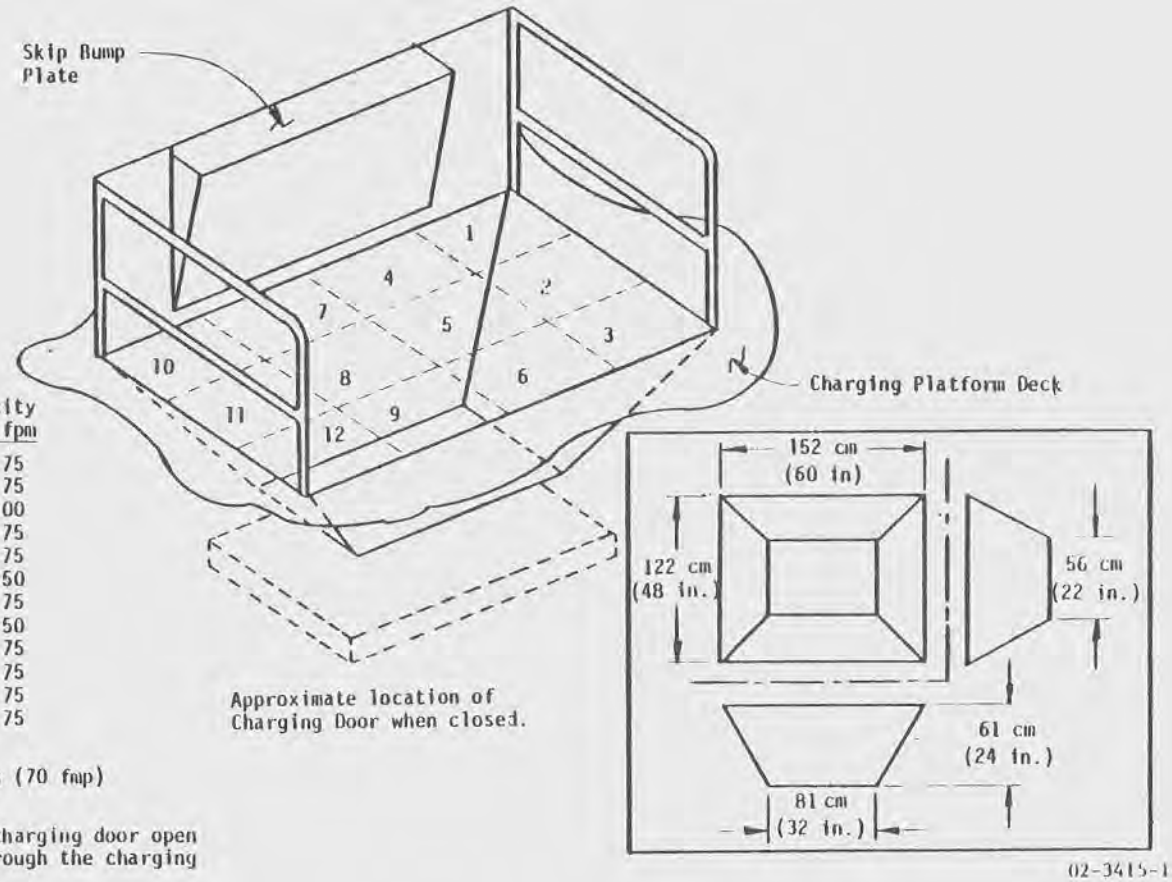

Air Flow Measurements*

Position No.	Face Velocity mps	fpm
1	0.38	75
2	0.38	75
3	0.51	100
4	0.38	75
5	0.38	75
6	0.25	50
7	0.38	75
8	0.25	50
9	0.38	75
10	0.38	75
11	0.38	75
12	0.38	75

V_{face} (average) = 0.36 mps (70 fmp)

* Measurements made with charging door open and air flowing down through the charging hopper into the furnace.

Figure 49. Rotary furnace - charging hopper.

Engineers at the smelter designed the water-cooled charging door and jamb. Estimated installed costs for the charging door system and thermosiphon equipment are as follows (1978 dollars):

Charging Door System	
Jamb and Door	$ 2,000
Air Cylinder	1,000
Installation	1,000
	$ 4,000

Thermosiphon Tank System (could use other source of cooling water)	
Tank	$ 5,000
Piping	10,000
Hose	1,500
	$16,500

Obviously, the water-cooled door and jamb could utilize another source of cooling water. The thermosiphon system offers the advantages of low maintenance, low makeup water requirements and low energy consumption beyond initial installation.

Observations--
Observation of the flue gas/charging door control system indicated that the system effectively captured both the exhaust gases from the furnace burners and the emissions produced during the charging operations when the system was operated properly, i.e., the furnace burner cut back during charging. When the furnace burners were not cut back during charging, a relatively small amount of fume was not controlled by the flue gas system. The charging door and jamb were clean and free of excretion at the time this evaluation was made.

During charging, employees perform most of the work from the ground level using the monorail skiphoist and tote bin materials handling system. Some of the scrap fed to the furnace can hang up in the tote bins as they are dumped or are caught in the throat of the charging hopper. Hangups in the tote bins may be cleared by ramming the bin into the skip bump plate (see Figures 43 and 44). When this fails, one of the charging employees may have to climb to the charging deck and dislodge the jamb with help of a metal rod. Charging employees also work on the charging deck when pallets of briquetted materials must be added. In these cases individual briquettes are manually pushed off the pallet into the charging hopper.

When charge materials jam in the throat of the charging hopper, the sliding charging door may be cycled several times to dislodge the material. If this fails an employee may have to use a metal rod to dislodge the material.

The scrap charged to the furnace during this evaluation was fairly clean. Briquetted copper wire, loose lengths of copper pipe tubing, and some ingot metal made up most of the charge.

As mentioned earlier, the draft through the charging door is also used to help control emissions from slagging operations. During slagging the furnace is rotated approximately 90° so that the charging door is positioned at the side of the furnace. Burners are cut back and the charging door opened. Slag is hosed out of the furnace into a slag ladle. Metal fumes emanating from the slag ladle are partially captured by the draft through the charging door. Fumes not captured rise under thermal propulsion and are diluted in the work environment. Air flow measurements at the charging door could not be made during slagging due to the extreme heat present and significant potential for contact with molten metal. Employees performing the slagging operation utilized long handled implements to provide an interval of distance between them and the slag ladle and charging port. Slag ladles were manipulated using a forklift truck.

Air Sampling--
A limited amount of air sampling was performed during this evaluation to help determine whether this control system was effective in preventing excessive levels of air contamination in the rotary furnace work area during specific cycles of furnace operation.

To determine whether the flue gas/charging control system prevented significant workroom contamination from charging operations, sampling was conducted both preceding and during furnace charging. The sampling performed prior to charging also helped to characterize workplace contamination during furnace tapping/pouring and ingot casting operations.

During furnace tapping/pouring and ingot casting, area samplers were positioned on the charging deck at either side of the furnace. Sampling was conducted for a 2-hour period during which time the furnace crew was pouring the furnace and casting ingots. The furnace crew employees were asked to wear personal sampling equipment during this period. The location of area monitors and approximate locations of employee work areas during this sampling period are shown in Figures 43, 44, and 46. The results of this sampling are shown in Table 13.

As can be seen from the air sampling data, little if any change in air contamination was measured by the area monitors as work switched from pouring and skimming to furnace charging. Of particular importance are area monitoring locations 1 and 2 which showed no significant change in air contamination between activities. Breathing zone samples indicate that more significant exposure occurred during pouring and skimming than during furnace charging. However, breathing zone concentrations during both

Table 13. Air Sampling Data[a]

Sample Number	Sampling Location[b]	Sample Type[c]	Process Activity[d]	Cu ug/m^3	Pb ug/m^3	ZnO ug/m^3
FM-07	1	A	Pouring	5	26	37
FM-06	2	A	Pouring	21	<26	68
Fm-04	3	A	Pouring	11	<26	53
FM-05	4	A	Pouring	21	<26	42
FM-03	5	BZ	Pouring Operator	37	26	102
FM-01	6	BZ	Pouring--Skimming	35	35	290
FM-02	6	BZ	Pouring--Skimming	35	35	290
FM-14	1	A	Charging	17	17	24
FM-13	2	A	Charging	56	18	32
FM-11	3	A	Charging	14	<14	9
FM-12	4	A	Charging	31	17	34
FM-08	7	BZ	Charging--Deck and Ground Level	52	27	30
FM-09	8	BZ	Charging--Ground Level	24	18	15
FM-10	9	BZ	Clean-Up Ground Level	50	33	160
OSHA Permissible Exposure Limit				100 (fume)	200	5,000
29 CFR 1910.1000				1,000 (dust)		

[a]Samples were collected on membrane filters with 0.8u pore size and were analyzed using atomic absorption spectrophotometry.
[b]Sampling Locations/Work Areas are shown in Figures 43, 44, and 46.
[c]A = Area Monitor; BZ = Breathing Zone Sample
[d]Pouring and Skimming were performed between 8:55 a.m. and 10:45 a.m. Charging began at 10:55 a.m. and was complete at 2:52 p.m. Air sampling was performed during the entire period of pouring and skimming and charging.

activities were well below the OSHA 8-hour TWA exposure limits for the respective substances.

Carbon monoxide measurements were made at several locations around the furnace and on the charging deck during pouring and charging. The highest carbon monoxide concentration measured was 5 ppm. These measurements were made with NIOSH-certified detector tubes. Based on the limited amount of sampling, it can be determined that the work environment did not degrade during the charging operation. The combination of flue gas/charging door emission controls, employee work practices and dilution ventilation effectively minimized employee exposures to air contamination associated with charging. These findings basically confirmed observations which indicated that only small amounts of air contamination were escaping the emission control system. It must be remembered that on the day evaluated, a relatively low lead "clean" alloy was being produced. Both baghouses were in operation and employees observed recommended work practices. It is possible that somewhat higher air contamination levels could be experienced with production of alloys containing larger amounts of lead, utilization of only one baghouse for contaminated control, or inattention to recommended work practices.

Tapping/Pouring and Casting Operation Control System

The rotary furnace tapping/pouring and casting operation control system consists of close fitting local hoods which are removable during other operations. Figures 45 and 50 show the relationship of these hoods to the rotary furnace. These hoods are connected to an exhaust fan (booster fan) which helps to propel the captured contaminated air through a long run of straight ductwork.to a point where this air stream joins the furnace flue gas exhaust stream. The contaminated air captured by these hoods is treated by the same baghouses which handle the flue gas stream. This system is used to control emissions produced when the furnaces are tapped and the product metal poured into molds. The bull ladle is supported by a monorail which facilitates its removal from over the bull ladle and casting line during other operations (see Figure 42). The tap hole hood is equipped with a section of telescoping ductwork directly above the hood and a flanged swivel beyond the telescoping section. These features allow this hood to be lifted up and swung away during periods when it is not in use (see Figure 45).

Engineering Measurements--
The design face velocity for the bull ladle hood (with no side curtains) and tap hole hood is 0.57 - 0.79 m/s (100-150 fpm) with a velocity in the duct of 14.2 m/s (2,800 fpm).

The booster fan used in this duct is designed to move 2.83 m^3/s (6,000 cfm) at a static pressure of 5.1 cm H_2O (2 in H_2O), with a

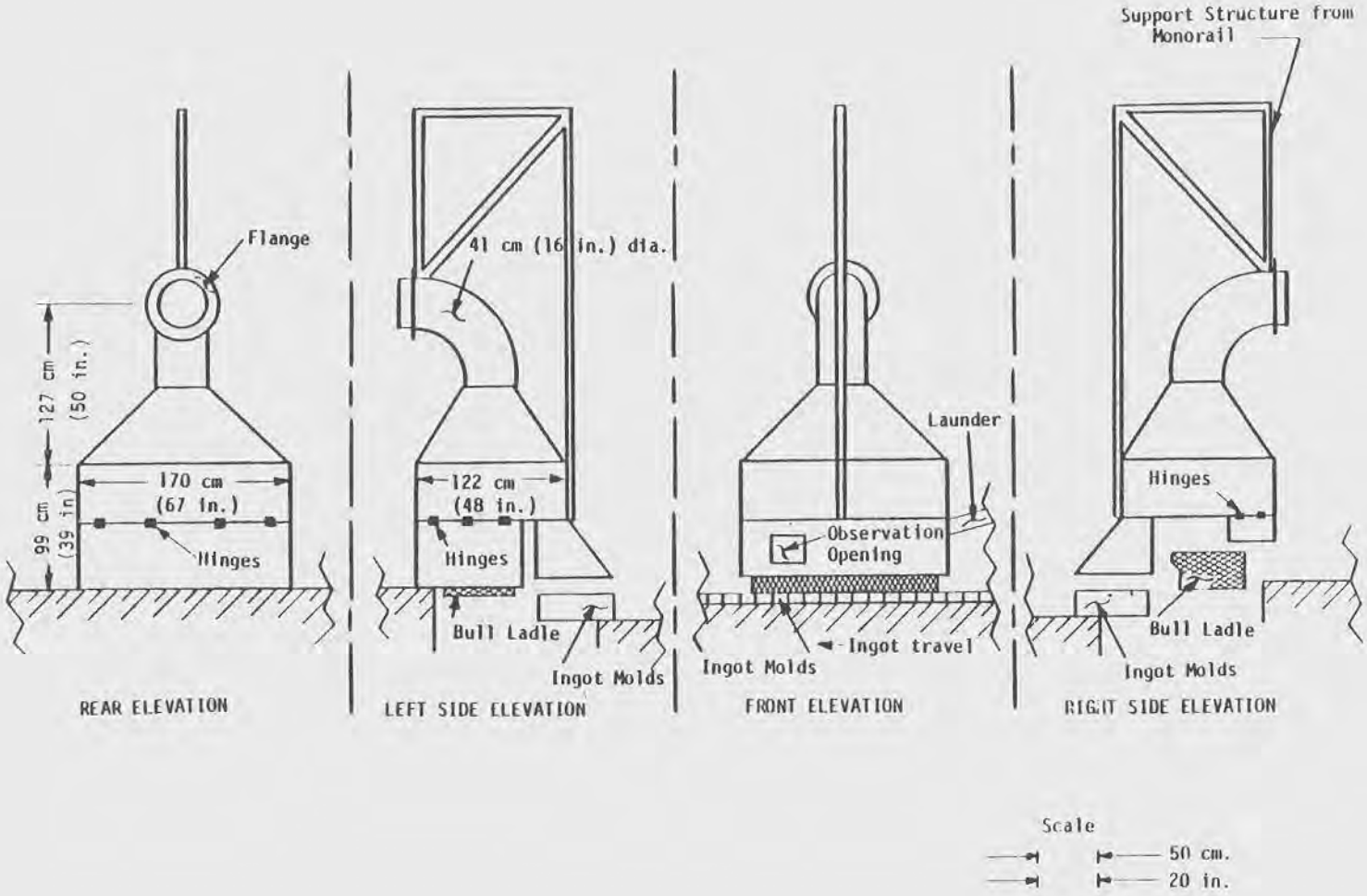

Figure 50. Bull ladle hood (movable, supported from monorail).

discharge velocity of 19.3 m/s (3,800 fpm). This fan is powered by a 6 W (4.6 BHP) motor operating at 860 rpm.

Face velocity measurements were made around the open sections of the bull ladle as it was positioned over the bull ladle and casting line. The results of these measurements are shown in Figure 51. The amount of enclosure provided by the hood side curtains has increased capture velocities in open segments of the hood to above design capture velocity for the hood without side curtains. Smoke tubes were utilized to illustrate air patterns near the hood. In all cases smoke was observed to flow briskly into the hood. No serious eddies or backflows were discovered.

Air flow measurements were made at the entrance to the exhaust duct with the bull ladle removed. These measurements indicated that approximately 1.7 m^3/s (3,500 cfm) of air was being drawn into the exhaust system through the bull ladle hood.

Face velocity measurements were made around the sides of the tap hole hood as it was positioned over the tap hole and launder. Face velocity was found to range from 1.0 - 2.0 m/s (200-400 fpm). Air flow measurments made inside the hood at the entrance to the duct work indicated that approximately 0.71 m^3/s (1,500 cfm) was being drawn into the exhaust system through this tap hole hood. Use of smoke tubes indicated strong eddy currents under the tap hole hood which cause some relatively minor back-flow of air out of the hood.

The rough measurements of volumetric air flow made during this survey indicate that the booster fan is operating near its design air moving capacity of 2.8 m^3/s (6,000 cfm).

Engineers designed the bull ladle hood, tap hole hood, and booster fan exhaust system. The installed cost of this system is estimated to be $20,000 (1978 dollars).

Observations--
Observation of the hoods over the tapping port and the bull ladle indicated that the hoods were containing air contamination generated directly under them. Emissions were observed to escape into the work environment from the covered launder and from the ingot molds after they passed from under the bull ladle hood.

Employees easily performed their routine metal casting duties without being hindered by these hood structures. Upon completion of casting these hoods were easily moved aside so that the bull ladle, launder, and tap hole could be reconditioned in preparation for the next pouring of the furnace.

Air Sampling--
A limited amount of air sampling was performed to help determine effectiveness of this control system. Personal monitors were

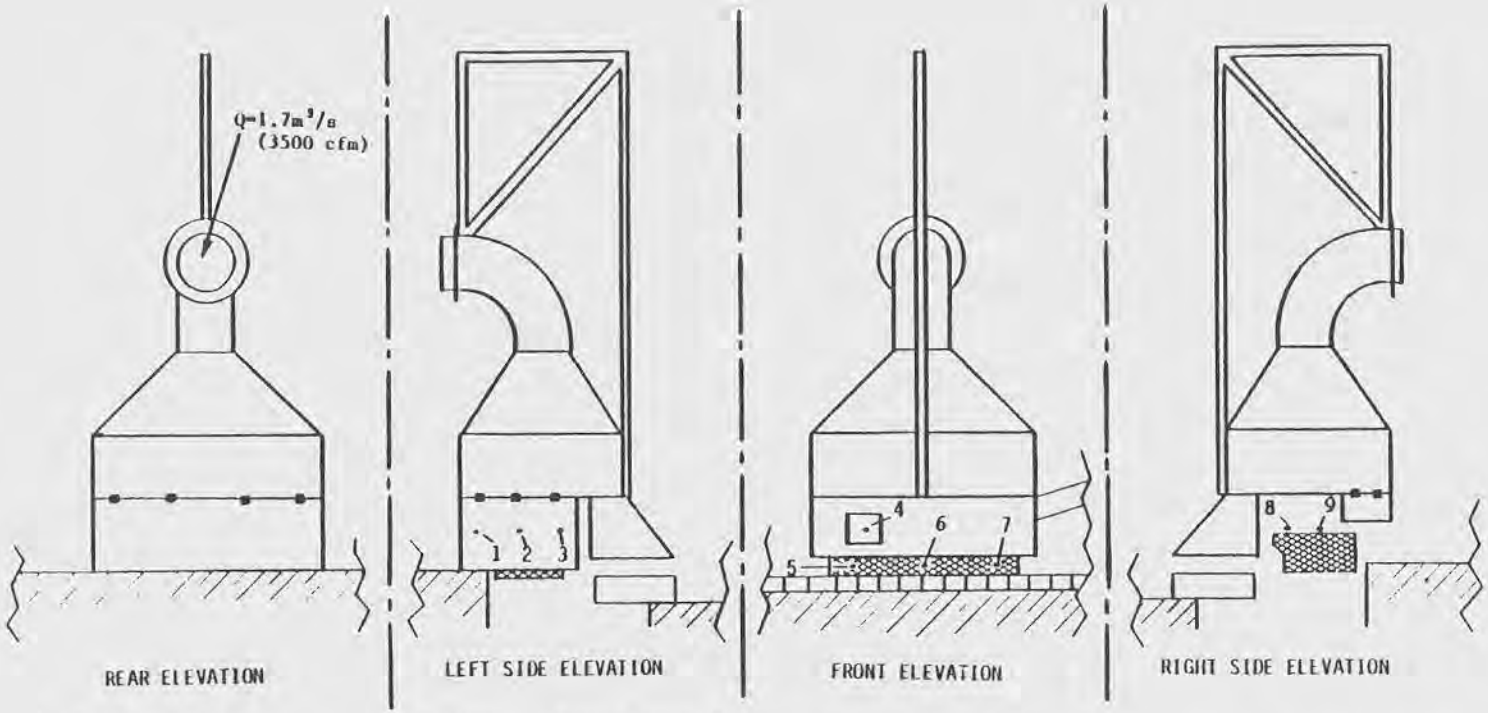

(No face velocity measurements obtained, since hinged panel is not raised during casting).

Position No.	Face Velocity* mps	fpm
1	1.52	300
2	1.78	350
3	1.65	325

Position No.	Face Velocity mps	fpm
4	1.02	200
5	0.89	175
6	0.89	175
7	1.02	200

Position No.	Face Velocity mps	fpm
8	1.27	250
9	1.27	250

* Measurements made with hinged panel raised

ENGINEERING MEASUREMENTS

Figure 51. Bull ladle hood - air flow measurements.

placed on employees working in the casting/pouring area. An area monitor was also placed at the mold pouring operator's station. The results of this air sampling is shown in Table 13. These samples were collected on membrane filters having a pore size of 0.8u and were analyzed using atomic absorption spectrophotometry. As can be seen from the air sampling data contained in Table 13, breathing zone concentrations of the metal fumes were well below the respective OSHA 8-hour TWA exposure limits during the period monitored. Apparently, the relatively minor fugitive emissions escaping from the launder and casting line were not of sufficient magnitude to result in excessive exposure of these employees.

It must be remembered that on the day evaluated, a relatively low lead "clean" alloy was being produced. Both baghouses were in operation and employees observed recommended work practices. It is possible that somewhat higher air contamination levels could be encountered with production of alloys containing larger amounts of lead, utilization of only one baghouse for contaminant control, improper positioning of the hood over the tap hole or failure to lower the side curtains on the bull ladle hood, failure to cover the launder with steel plates, or inattention to recommended work practices.

CONTROL CRITIQUE

The air contaminant emission control systems studied adequately controlled employee exposures to air contaminants emitted by the rotary furnace during the days they were observed. These systems have been designed to provide effective air contaminant capture while at the same time not hindering the performance of routine work. The exhaust hoods, ductwork, fans, etc., were all well maintained. Employees appeared to understand the necessity for each control system and for the most part utilized the control systems in a manner consistent with their designed function.

Flue Gas/Charging Control System

The flue gas/charging system functioned well during the days observed. To achieve best control during charging, the furnace burner must be cut back while the charging door is open. It may be worthwhile to interconnect the burners and charging door controls so that the burner automatically cuts back when the charging door opens.

This system was only observed with both baghouses in operation and it is unknown whether adequate control could be maintained with substantially reduced draft on the furnace. The air flow measurements made at the top of the charging hopper at the charging deck level (see Figure 49) indicated that only a minor reduction in draft would significantly reduce control effectiveness.

The furnace draft through the charging port was not totally effective in controlling emissions from slag removal. In smelters where high lead alloys are produced, it may be necessary to supplement these control systems with local exhaust ventilation at the slag ladle station.

The water cooled charging door and jamb appeared to have effectively minimized the warpage problem associated with more conventional structures of this type.

Bull Ladle and Tap Hole Exhaust Hoods

The bull ladle and tap hole exhaust hoods appeared to adequately control emissions in the casting work area. When high lead alloys are produced the fugitive emissions from the covered launder and ingot molds may be a substantial source of air contamination. The launder could be provided with local exhaust ventilation which could be integrated with the tap hole exhaust hood. Depending on the degree of enclosure attainable, an increased rate of exhaust from this branch of the system may be required.

The hoods and ductwork were easily positioned by employees. The heavy gauge metal used in these structures has adequately resisted denting and major deforming through use.

OTHER HAZARDS AND USE OF PERSONAL PROTECTIVE CLOTHING AND EQUIPMENT

Employees assigned to the rotary furnace crews and other employees who operate materials handling equipment and perform maintenance near the furnaces may be exposed to hazards other than metal fumes and combustion gases from the furnace operations. These hazards include: possible contact with molten metal; exposure to excessive heat; exposure to harmful infrared radiation; and exposure to noise. Due to the presence of these potential hazards, employees utilize a variety of personal protective clothing and equipment items to reduce the possibility of harmful exposure. Safe work practices are also employed to minimize risk or injury.

The potential for contact with molten metal is most significant during slag removal and tapping/pouring of the rotary furnaces. The following articles of protective clothing and equipment are worn routinely during these operations: safety helmet, safety toe shoes with metatarsal protectors, safety spectacles with side shields, faceshields (clear and tinted), gloves, and heat shield aprons. Some of these articles are removed when tasks of lesser overall hazard are performed which do not present significant potential for contact with molten metal.

Employees assigned to the furnace crew were experienced and presumably well acclimatized to the level of physical exertion and heat stress associated with their jobs. Heat stress and infrared radiation exposure measurements were not attempted at this smelter for a variety of reasons. These physical agents are not the focus of attention in this control technology assessment.

It is extremely difficult to obtain meaningful exposure measurements with regard to these agents. The interpretation of any such measurements continues to be a controversial subject. These agents were present in potentially harmful intensities. However, the employees and management appeared to have implemented a reasonable and prudent program of personal protection to minimize their potential deleterious effects. As is the case in many industrial hot metal operations, there existed a need to constantly encourage and enforce the wearing of tinted eye and face protection when work requires looking at molten metal.

Noise in the furnace building work areas is caused by a variety of equipment and operations. Furnace-firing mechanisms and ingot handling were responsible for most noise, while adjacent operations and materials handling equipment contributed to background noise levels. Table 14 contains the results of noise measurements made at several locations in the rotary furnace work area. As can be seen from the data, potentially hazardous noise levels are generated by a variety of equipment, and a hearing conservation program is needed.

Table 14. Noise Measurements

Operation/Location	dBA	dBB	dBC
During Casting:			
Near Primary Air Blower for Furnace	95	97	98
Near Secondary Air Blower for Furnace	94	95	97
Near Furnace Burner	92	95	97
Near Damper in Square Brick Stack	90	94	96
At Casting Operator's Work Station	92-94	94-96	97-98
At Skimming Work Station	91	94	96
Near Water Cooling Hood on Casting Line	96	97	99
At Vibrator for Casting Line (Shakes Ingots Out of Molds)	105	105	106
At Ingot Dump to Tote Bins Peaks to 114 dBA (Af)	94	96	97
During Lunch Break Background (Blowers for Furnace, Burners, etc.) (Furnace in Melting Cycle)			
Near Primary Air Blower for Furnace	92	94.5	96
Near Secondary Air Blower for Furnace	90	92	94
Near Furnace Burner	89	92	94
Near Damper in Square Brick Stack	82	87	93

IN-DEPTH SURVEY IV

PAUL BERGSOE AND SON A/S

(Secondary Lead Smelter)

INTRODUCTION

As part of an inter-agency effort, the Control Technology Assessment Branch of NIOSH and the Metals and Inorganic Chemicals Branch of EPA have performed a characterization of new secondary lead smelting technology. The processes characterized offer potential solutions to major occupational and environmental problems associated with secondary crude lead production. Two major processes were studied: special battery (SB) smelting and flash agglomeration of flue dust. The study was performed at the Paul Bergsoe and Son Smelter in Glostrup, Denmark.

This study provided both EPA and NIOSH an opportunity to cooperate on a test program where measurements of both stack and workplace/fugitive emissions were made. Fugitive emission rates were not measured directly in this study. However, the concept of using lead-in-air levels as one measure of fugitive emission control effectiveness may be a useful tool for EPA in the future. Likewise, NIOSH may find that recording process variables and stack emission data may help in future efforts to characterize the workplace environment. Changes in a process variable or a stack emission rate may serve as a useful indicator that a particular agent may present a workplace contamination problem. This study was a start toward developing a combined test procedure for process characterizations. Future test programs will certainly expand on this one to include direct measurements of fugitive emission rates and fugitive emission control efficiency.

PLANT DESCRIPTION

Secondary lead smelting involves three major operations: scrap pretreatment, smelting, and refining. Figure 52 outlines the material flow in a secondary lead smelter and lists the major processes, raw materials, and products. SB smelting is an important process because it eliminates the battery decasing step when whole batteries comprise a portion of the furnace charge. During the test period whole batteries comprised 40 percent of the lead-bearing charge. In addition, since flue dust agglomeration is an integral part of the SB smelter, a major part of the smelter fugitive dust emissions is eliminated. It is important to note, however, that SB smelting alone is applicable only for the production of crude lead. Additional refining processes are required to produce soft lead, lead oxide, or lead alloys.

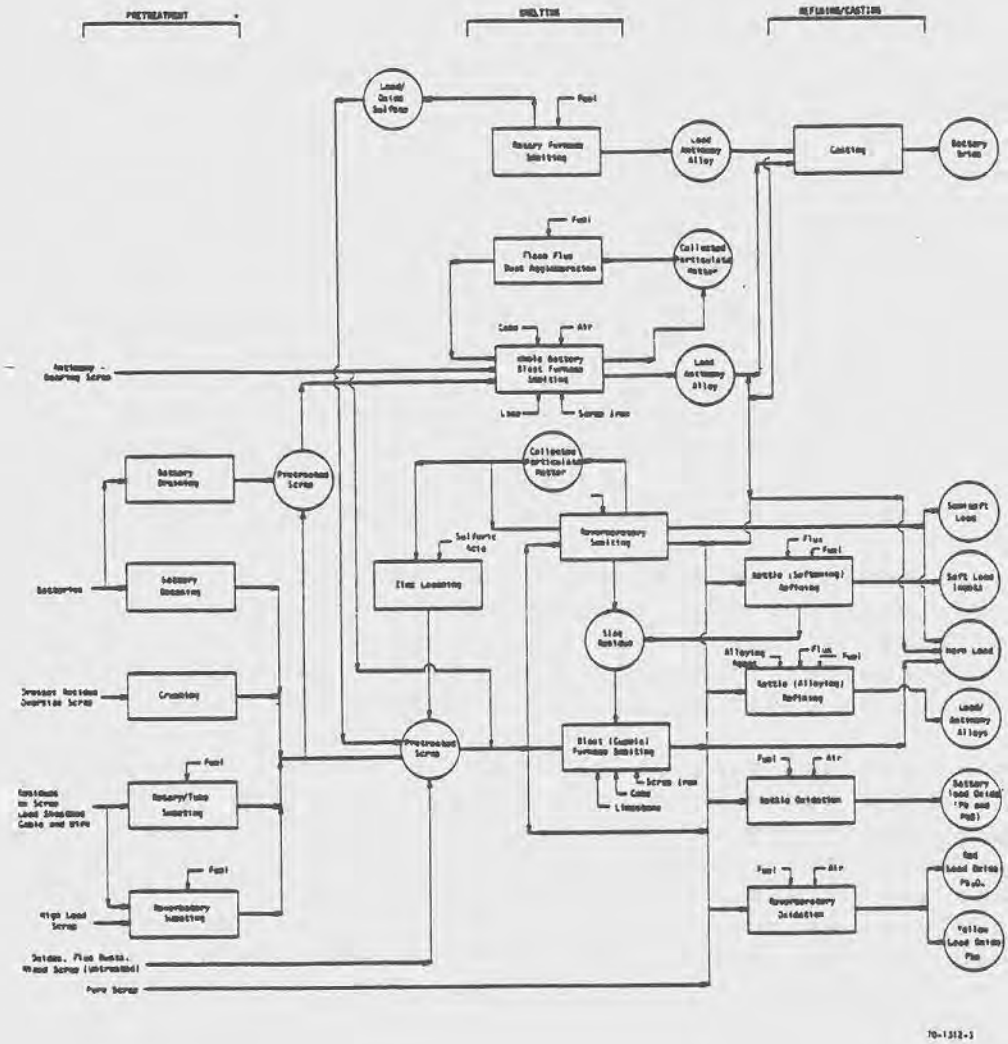

Figure 52. General process flowsheet for the secondary lead smelting industry.

SB smelting incorporates both environmental emission control and occupational health features in its design. Plant layout, raw material storage and handling, process and hygiene ventilation, housekeeping, process control, and flue dust agglomeration are all included in the smelter design. Also, the SB furnace is operated at conditions producing minimum emissions. This approach has been implemented by Paul Bergsoe and Son A/S of Glostrup, Denmark, where environmental and occupational health regulations forced modernization of their lead smelter.

SB BATTERY SMELTING FURNACE

The SB battery smelting shaft furnace has a rectangular cross section unlike most cylindrical secondary lead blast furnaces used in the United States. The construction is similar to a primary lead blast furnace. Figure 53 is a diagram of the furnace and associated gas treatment system. The furnace is constructed so as to isolate the charging floor from the bottom of the furnace. Additionally, the raw material storage and handling area is isolated in an enclosed building. Thus only the front-end loader operator charging the furnace works in a "dirty" area. The front-end loader does have a filtered air supply. In addition, the top of the blast furnace is provided with local exhaust ventilation to minimize fugitive emissions.

At the bottom of the furnace, local exhaust ventilation is provided for the four slag taps and the lead ladles. There are two rows of tuyeres, one on either side of the furnace, designed to use air preheated to 500°C. The tuyeres have special covers which minimize fugitive emissions during punching.

The local exhaust ventilation air and process flue gases are mixed and all gases pass to four baghouses (at 100-125°C). The baghouses are a Swedish design using felted polyester cloth. The dust is collected on the outside of the bag and only a mild cleaning air stream is required to dislodge the dust. This reportedly gives the bags a longer life. The baghouses were designed to operate with three running and one spare. During the test period, all four were running. The air-to-cloth ratio with four baghouses operating is 34.5 $m^3/hr/m^2$ (1.88 $ft^3/min/ft^2$). The effective cloth area is 4720 m^2 for four baghouses. Typical pressure drop across the baghouse is 150 mm (about 6 inches) water gauge.

The collected dust is conveyed in an enclosed screw conveyor system to one of two small flash agglomeration furnaces. The flash agglomerator furnace is oil fired and consumes approximately 7.7 liters of oil per hour. In this patented process, the dust is melted, reducing its volume by about 80 percent. The agglomerated dust represents only 2 or 3 percent by weight of the furnace charge. This reduction in volume permits an increased throughput of raw material and increased production per square foot of

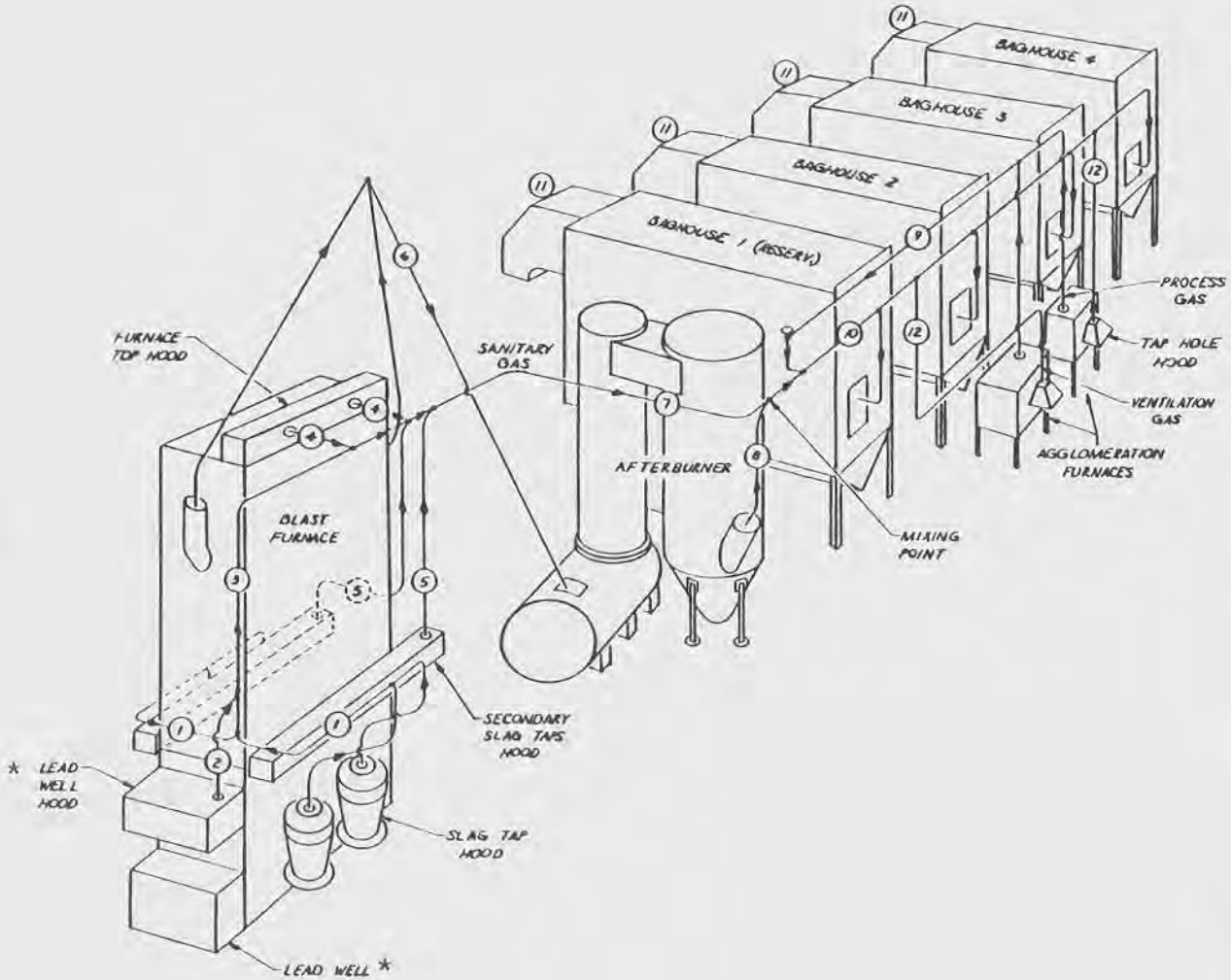

STREAM No.	STREAM NAME
1	SLAG TAP VENT
2	LEAD WELL VENT
3	(1)+(2)
4	FURNACE TOP SANITARY VENT
5	SEC. SLAG TAP VENT
6	PROCESS GAS
7	(3)+(4)+(5)
8	AFTERBURNER OFF GAS
9	AGGLOMERATION FURNACES GAS
10	(7)+(8)+(9)
11	COMBINED EXIT GAS
12	AGGLOMERATION FURNACES VENT

02-2529-4

*See Figure 13 for new lead well arrangement.

Figure 53. Whole battery smelter furnace and flue gas treatment system.

furnace cross-section. Agglomerating the dust also reduces the dust load circulating in the gas cleaning system because the agglomerated dust is not entrained from the top of the furnace.

The smelter area is paved and is wetted and swept periodically. This practice minimizes fugitive emissions normally caused by the wind blowing dry lead dust in the yard. This wash water is collected, combined with the acid drainage from cracked batteries stored in the yard, and is finally discharged to the municipal wastewater treatment facility. The sludge is withdrawn approximately once every two weeks and is charged back to the furnace for additional recovery of metals.

The smelter is serviced by two additional sewer collection systems, one for rainfall and one for sanitary sewage. The rainfall collected is used as washdown water for the smelter yard. Additional makeup cooling water is obtained from the municipal water supply. This water is softened in an ion exchange unit before use. Sanitary sewage is discharged directly to the municipal collection system.

Furnace Operation

The operation of the SB furnace results in low stack and fugitive lead emission rates. The relatively low blast air rate (about 3,500 Nm^3 air/hr*) and large furnace cross-sectional area (4.0 m^2 at the tuyeres) result in a low gas velocity. This, combined with the low furnace top temperatures (about 100°C) and the absence of loose flue dust in the charge, result in a low lead dust generation rate. The large furnace cross-section and small production rate allow the charge material to descend slowly through the furnace shaft. Thus the charge heats slowly and is not hot enough at the top of the furnace to generate lead fume.

This slow heating also prevents the rubber and polypropylene case material from "burning through." Burn-through could occur when the charge material is ignited throughout the furnace shaft rather than only in the smelting zone. This occurs more readily in the SB furnace than in a conventional blast furnace because the rubber of polypropylene case material is present. It is therefore very important to control the furnace temperature both from an operating and an environmental viewpoint.

Furnace Charging

In order to help maintain constant temperature in the furnace, the feed is carefully bedded on the chargeroom floor. A layer of coke is spread on the floor first, followed by recycle slag, batteries, plates, scrap iron and other feed materials. By doing this, each bucket of material charged to the furnace contains

*Nm^3 = normal cubic meters, 0°C, 760 mm Hg.

roughly the right amount of coke. This practice maintains a homogeneous mixture of material in the furnace and helps avoid hot spots.

Each furnace charge during the test period contained roughly the same ratio of the materials shown in Table 15. A front-end loader is used to spread the feed materials on the chargeroom floor. A large floor scale is used to weigh the front-end loader with a full bucket. A measurement is fed to the mini-computer which monitors the smelter operations. The weight of the empty front-end loader is subtracted and the charge weight is recorded. A very accurate measurement of the charge blend is possible using this technique, typically within 1 to 2 percent of the target on major components (batteries, plates, etc.) and with 4 to 5 percent on the minor components.

Table 15. Typical Feed Makeup for SB Smelting Furnace Charge

Feed Material	Approximate Weight Percent	Percent of Lead Bearing Charge
Whole batteries		
-polypropylene case	12.6	20.0
-hard rubber case	12.6	20.0
Battery plates	31.5	50.0
Agglomerated dust (or battery mud)	3.2	5.0
Drosses (or battery mud)	3.2	5.0
Return slag	22.1	
Coke	5.7	
Scrap iron	1.9	
FeO (mill scale)	6.3	
$CaCO_3$	0.9	
Total	100.0	100.0

Operating Parameters

At present, the Bergsoe smelter does not have permission to dispose of the furnace slag in a landfill. As a result, the furnace is being operated in a slightly different fashion than it would if the slag could be dumped. At present, the furnace slag reportedly contains between 1.5 and 3 weight percent lead. The samples gathered during this study assayed approximately 0.55 weight percent lead. All of the slag is stockpiled and the portion with a high lead content is recycled to the furnace. When a dumping permit is obtained, additional $CaCO_3$ will be added to the charge to maintain the slag lead content below 2.0 weight percent.

Adding more $CaCO_3$ will raise the slag melting point and make control of the SiO_2/FeO ratio more important. In the past,

accretions (freezing) at the tuyere level in the furnace have been a problem. In some of the early campaigns, large accretions of an iron-containing material had to be removed from the furnace. An analysis of similar accretions taken from the SB furnace constructed at Britannia Lead Company in Gravesend, England, showed that the following elements were present as expected: Al, Si, Pb, S, Ca, and Fe. However, the major crystalline species have not, as yet, been identified. Bergsoe operators appear to have eliminated the problem by reducing the iron feed to the furnace. Blast air oxygen enrichment was also added and reportedly helped eliminate the problem. The accretion problem is not expected to recur when additional $CaCO_3$ is added because of the reduction in iron content of the feed materials.

Scrap iron and mill scale (FeO) are added to the furnace so that a PbS-FeS matte forms between the lead bullion and slag in the furnace. Most of the sulfur input is trapped in this matte. At present, the matte is being stored on-site because of its high lead content (about 8 percent). It must either be sold to a primary lead smelter or disposed of in a protected landfill. Recovery of the matte lead content at a secondary lead smelter is not possible because of the sulfur. Sulfur dioxide emission controls would be required for any furnace processing the matte. A primary lead smelter, however, could combine this material with the normal lead sulfide materials they process.

Oxygen-enriched air is used in the SB furnace. Blast air is preheated to 500°C and then mixed with oxygen prior to entering the furnace. Preheating the air reduces the amount of coke required in the furnace and allows smaller blast air rates to be used. As mentioned earlier, this helps reduce dust generation in the furnace. Blast air pressure at the tuyeres ranges from 800 to 1,200 mm H_2O. The blast air rate is typically between 3,200 and 3,700 Nm^3/hr with between 60 and 115 Nm^3/hr of oxygen added. These rates correspond to a production rate of between 62 and 74 metric tons of Pb per day.

FLASH AGGLOMERATION FURNACE

The flue dust generated by smelting automobile battery and battery manufacture scrap melts at approximately 400 to 900°C (750 to 1,650°F). This low melting point makes flash agglomeration of flue dust possible. Dusts with higher melting points cannot be agglomerated using this techique without causing the low melting materials to volatilize. A special furnace was designed to take advantage of this property so that dust handling could be completely avoided.

At most secondary lead smelters, it is common practice to return flue dust directly to either the blast furnace or a reverberatory furnace. A considerable amount of this dust is entrained in the furnace flue gas system. Agglomerating the flue dust prevents

entrainment, thus reducing the load on the baghouse and improving its performance.

The Bergsoe smelter has two agglomeration furnaces serving the four SB furnace baghouses. Figure 54 is a diagram of a slag agglomeration furnace. The agglomeration furnace is fed directly from the baghouse dust hoppers via screw conveyor. The dust drops onto the furnace hearth where it melts almost instantaneously upon contact with an impinging flame. The liquid runs down the sloping hearth, through a permanently open taphole and into a cast iron vessel where it solidifies. This completely eliminates handling of the dust, the associated occupational hazard, and fugitive emissions from flue dust storage piles provided that the agglomerated dust is stored indoors.

Tipping the contents of the cast iron vessels onto the floor is usually sufficient to break the material into lumps suitable for recharging to the blast furnace. It is simply mixed with coke and flux and loaded into the top of the blast furnace along with other charge materials.

Because less flue dust is generated, and because the volume being recycled is reduced by about 80 percent, additional material can be charged to the furnace, thus increasing the smelting rate. This is one economic justification for the agglomeration furnace.

A degradation of the flue dust also takes place. Lead chloride forms as the polyvinylchloride battery plate separators are smelted. Lead chloride is more volatile than other oxide materials in the furnace. Recirculating the flue dust causes lead chloride to distill in the furnace, increasing the chlorine content of the flue dust. Flue dust which has accumulated a large percentage of chlorine can be either leached to remove the chlorine, or used as a fluxing agent in another part of the smelter.

PLANT LAYOUT

A plot plan of the new Bergsoe smelter is shown in Figure 55. The old lead smelter, the lead refinery, the small cast iron department, the copper department, and the other small smelting operations are located between 100 and 400 meters southwest of the new smelter. The old smelter was built in the 1930's. Construction on the new smelter began in 1973 and the initial startup occurred in 1975.

The SB furnace is located in the building labelled #1 on Figure 55. As mentioned earlier, the furnace building isolates the top of the furnace where the charging takes place from the work area on the first floor. Figure 56 shows the front-end loader charging material to the furnace top. The large hood over the charge area captures emissions escaping from the furnace top. Figure 57 is a view of the outside of the building looking east. The SB

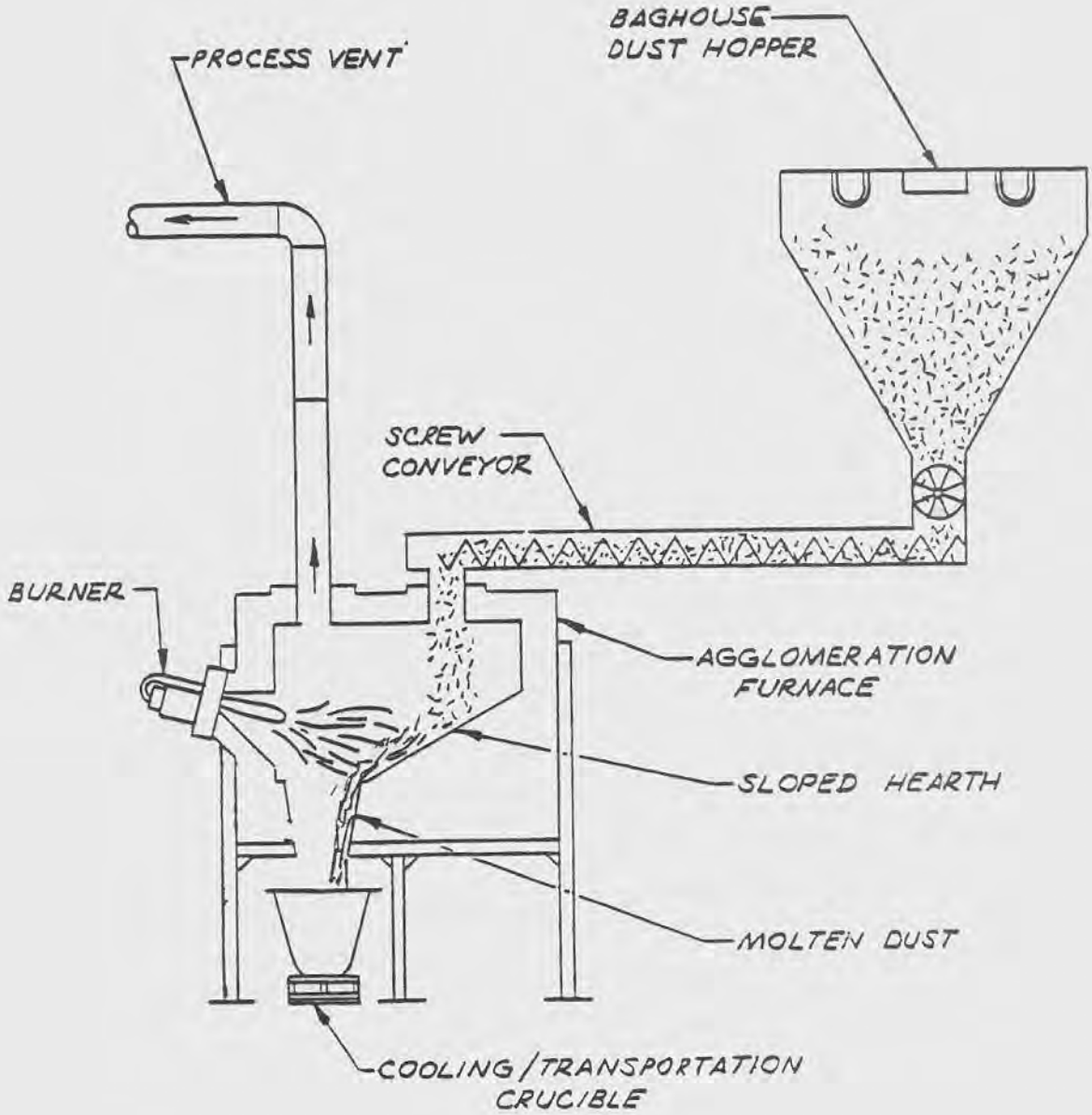

Figure 54. Flash agglomeration furnace.

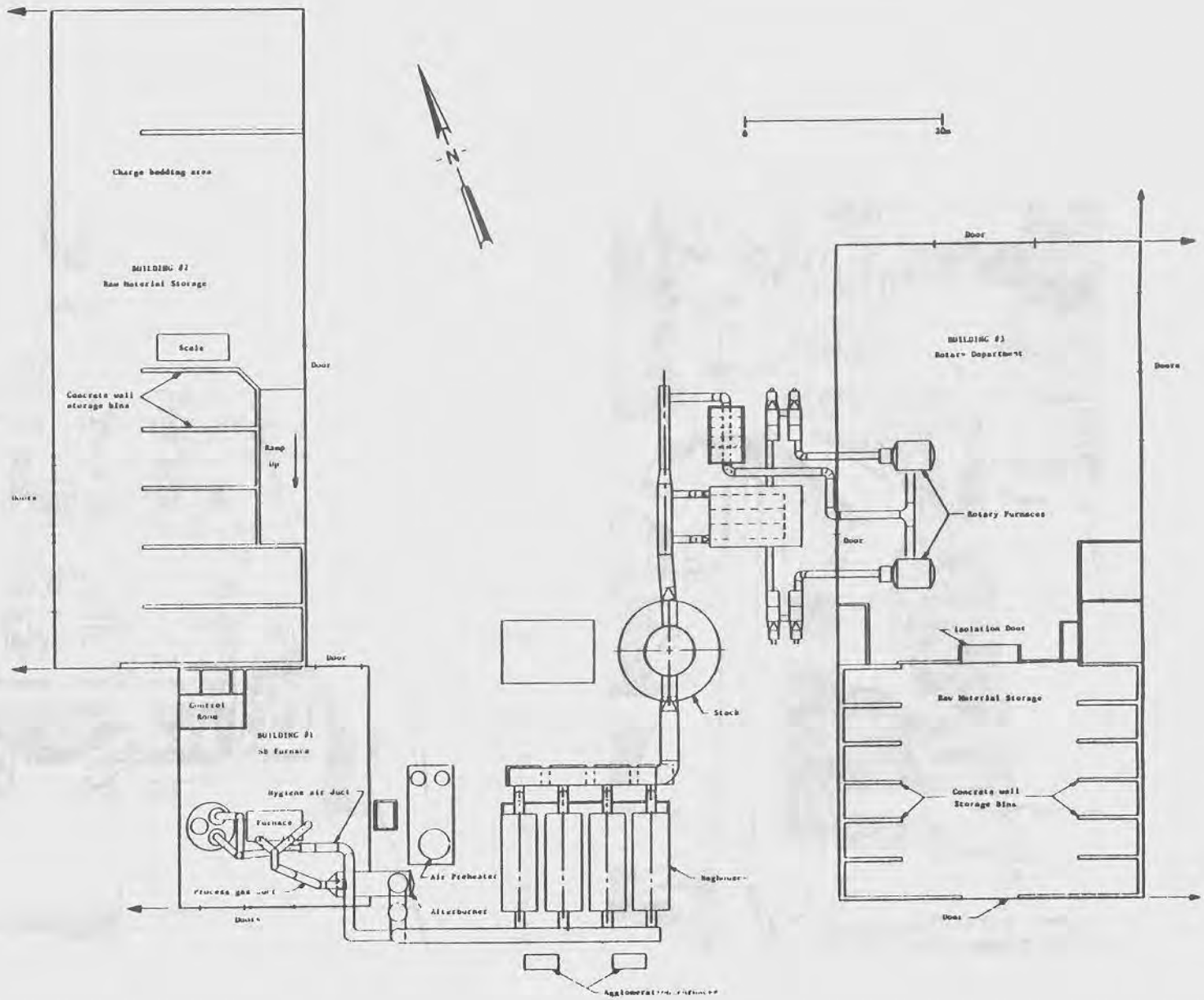

Figure 55. Plot plan.

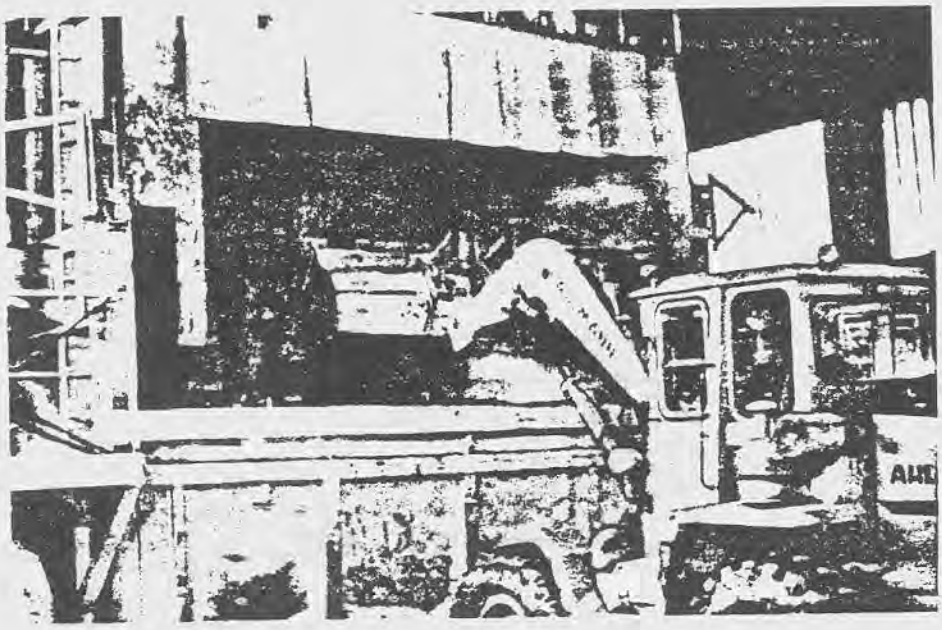

Figure 56. Front-end loader delivering charge to top of SB furnace.

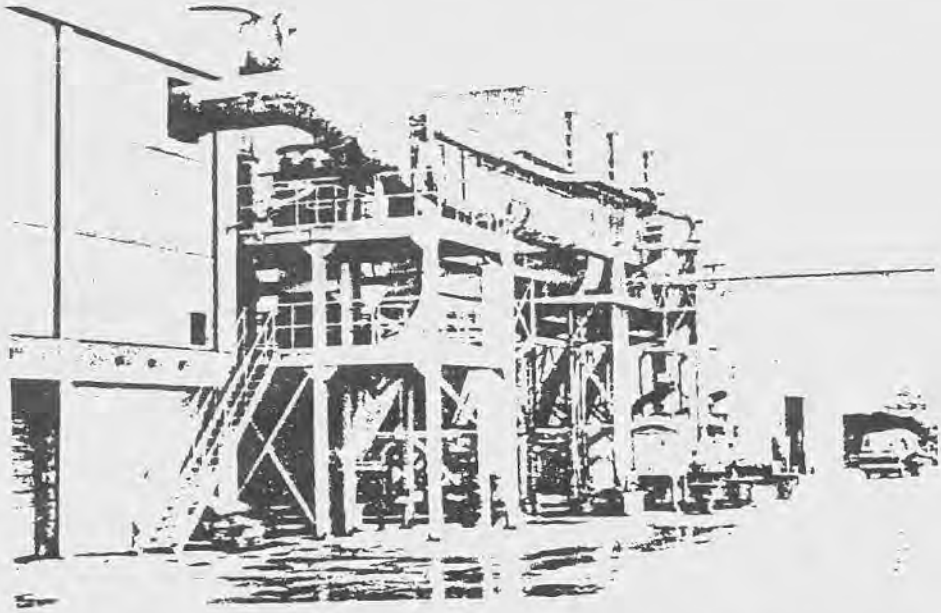

Figure 57. View of smelter building and baghouse.

furnace building is on the left. The afterburner chamber can be seen between the building and the four large baghouses. The two small agglomeration furnaces are located in front of the baghouses. Figure 58 shows the tapping area on the first floor of the SB furnace building. Figure 59 is a view of the two agglomeration furnaces.

As shown in Figure 55, the SB furnace and the two rotary furnaces located in Building #3 both discharge to a common stack. The rotary furnaces were not operating during the SB furnace test period.

Raw materials are stored in concrete bins in Building #2 in Figure 55. Building #2 also contains the charge bedding area. Building #2 is not large enough to contain all of the raw materials because of the irregular receipt of scrap material. As a result, several large piles of plates, unbroken batteries, and clean lead scrap are stored to the west of Buildings #1 and #2.

The small sodium carbonate water treatment plant is located between the old and new smelters to the south of Building #1. As can be seen in Figure 55, the smelter fenceline is 200 meters east southeast from the SB furnace building. This is the closest point from smelter to fenceline. In addition, the prevailing winds are from either the west or west northwest.

SUMMARY OF RESULTS

In this section, the results of the NIOSH and EPA source characterization studies are summarized. The purpose of the testing performed for this program was to characterize the operation of and emissions from the combined SB smelting and flue dust agglomeration furnaces. The EPA characterization included: an analysis of the smelter feed materials; a determination of the flows of lead, antimony, arsenic, chlorine, and sulfur; measurements of stack emissions; calculation of an emission factor; measurement of lead-in-air levels in the smelter yard; and a description of the furnace operation. The NIOSH characterization included: workplace and personal monitoring; evaluation of ventilation and other employee exposure control system; and observation and evaluation of work practices and personal protective equipment.

The major results are:

- The smelter feed consisted of the following materials:

Whole Batteries		
-polypropylene case		12.6% (weight)
-hard rubber case		12.6
Battery Plates		31.5
Agglomerated Dust	(or battery mud)	3.2
Drosses	(or battery mud)	3.2

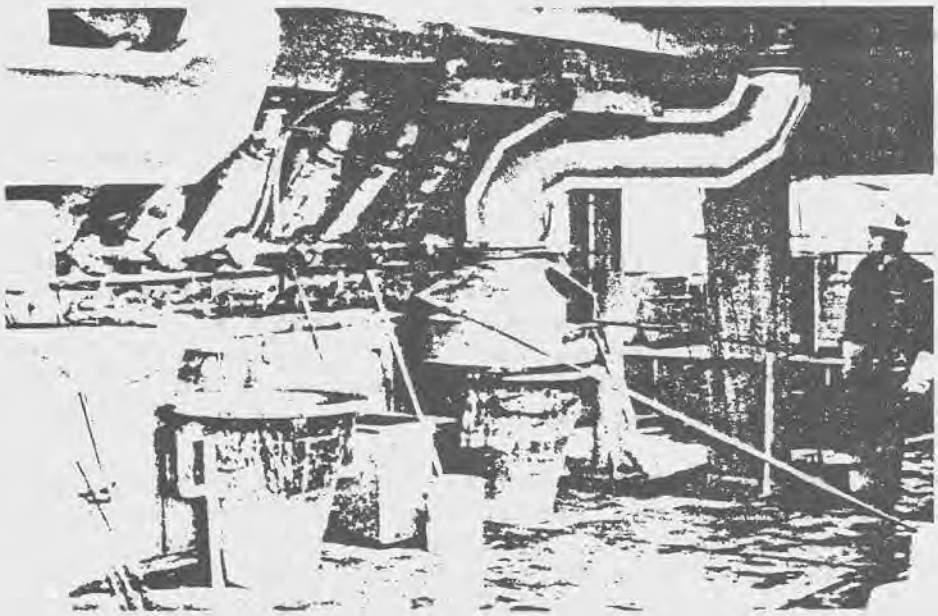

Figure 58. Slag tapping area.

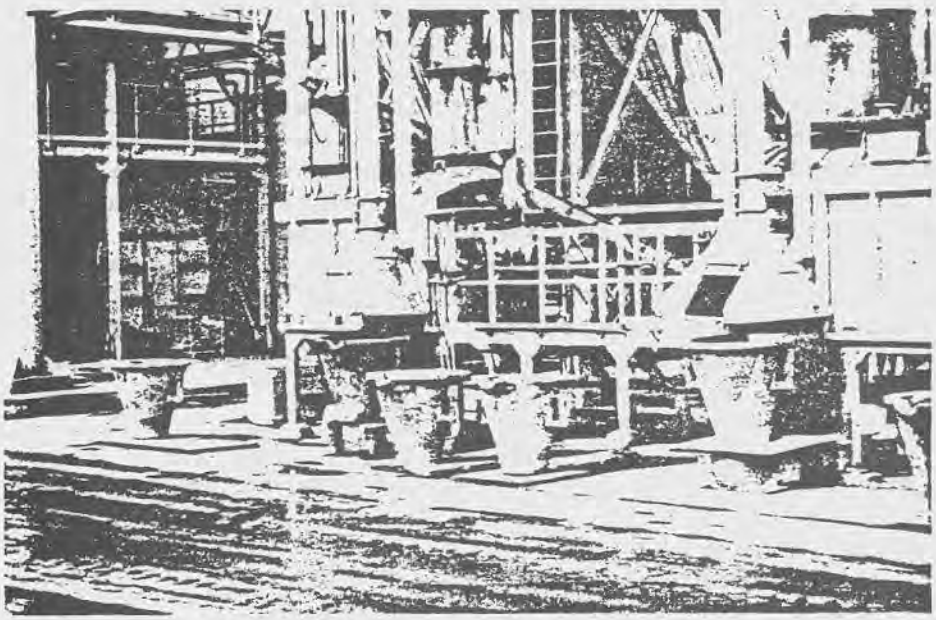

Figure 59. View of agglomeration furnace.

Return Slag	22.1
Coke	5.7
Scrap Iron	1.9
Mill Scale (FeO)	6.3
$CaCO_3$	0.9
Total	100.0

The total input materials contained an average of 79 metric tons lead, 1.5 metric tons antimony, 29 kilograms arsenic, 0.1 metric tons chlorine, and 2.6 metric tons sulfur per day.

- During the test period, these five elements were distributed in the smelter output materials as shown in Table 16:

Table 16. Approximate Elemental Distribution in Smelter Exit Streams

Output Stream	Percent of Total Incoming Flow				
	Pb	Sb	As	Cl	S
Lead Bullion	87.7	98.5	10.4	12.8	0.14
Lead Stone (Matte)	0.90	11.2	75.7	36.8	98.0
Stack Gas	0.0025	0.84	0.07	75.8	7.2
Total	89	110	86	125	105

(Estimated accuracy of elemental flow rates is ±20%.)

- The chlorine content of the agglomerated flue dust averaged 25 percent by weight. This indicates that chlorine accumulates in the flue dust collection system.
- The lead particulate emission rates based on the EPA Method 5 test results were:
  - -September 26, 1978 0.056 kg Pb/hr
  - -September 27, 1978 0.046 kg Pb/hr
- Total stack lead emissions, based on the wet electrostatic precipitator (WEP) experiments, ranged between 0.042 and 0.12 kg Pb/hr.
- The stack lead particulate emission factors (after control) based on the WEP experiments were:
  - -September 26, 1978 14 g Pb/metric ton Pb product
  - -September 27, 1978 42 g Pb/metric ton Pb product
- Stack chlorine emissions ranged from 1.6 to 7.1 kg/hr.
- Stack gas concentrations ranged from 39 to 54 ppm sulfur during the test. This corresponds to sulfur emission rates of 6.7 and 9.1 kg S/hr.
- Total stack antimony emissions ranged between 0.52 and 0.54 kg/hr.
- Total stack arsenic emissions ranged between 0.0005 and 0.0013 kg/hr.

- Only one high volume area sampler was run on each of the two test days. The hi-vol was placed underneath the baghouse nearest the east fenceline (see Figure). It was approximately 4 meters from the east agglomeration furnace and 80 meters from the east fenceline. The two 24-hour average lead-in-air levels were:
  - -September 26, 1978 12 ug Pb/m^3
  - -September 27, 1978 18 ug Pb/m^3
- Stack emission based on the WEP tests are presented in Table 17:

Table 17. Stack Emission Determined Using WEP Train

	September 26, 1978		September 27, 1978	
Element	Concentration (ug/Nm^3)	Emission Rate (kg/hr)	Concentration (ug/Nm^3)	Emission Rate (kg/hr)
Lead	1,010	0.12	350	0.04
Antimony	4,390	0.54	4,370	0.52
Arsenic	4	0.0005	11	0.0013
Chlorine	13,300	1.6	59,500	7.1
Sulfur	55,700	6.7	77,100	9.1

- The engineering and work practice controls of employee exposure at this smelter are exemplary. The effectiveness of this system of controls is evidenced by the control of employee exposures to lead in all work activities associated with the SB furnace to approximately 100 ug/m^3 or less.
- In general, the local exhaust ventilation systems provided for the SB furnace are well designed and maintained. They provide good enclosure of emission sources, vigorous hood face and duct transport velocities, access openings and mobility to allow efficient performance of routine work.
- Yard sprinkling and washdown procedures appeared to greatly minimize entrainment of dust into the air, tracking to muddy materials into other work areas, and splashing of mud on employee clothing and plant equipment.
- Washdown procedures employed in the SB furnace operating area did maintain floors in dust-free and clean conditions.
- The SB furnace process control room was found to be contaminated with lead (38 to 54 ug Pb/m^3).

CONTROL TECHNOLOGY ASSESSMENT

DESCRIPTION OF EQUIPMENT AND CONTROLS

The section, "Plant Description," of "In-Depth Survey IV," contains descriptive information concerning the SB shaft furnace and controls. This section emphasizes the features of the SB furnace and associated equipment which are important for the control of employee exposures to lead and other workroom contaminants.

Receipt of Raw Materials

The containment and suppression of airborne contamination inherent in handling feed materials are integral features in the design of this secondary lead smelting complex. Figure 60 presents an overview of the SB Furnace Building and the Charge Storage and Preparation Building. Materials are received by truck and are usually unloaded in the paved yard area. Here the materials are separated and then transferred into the Charge Storage and Preparation Building by large rubber-tired, diesel-fueled front-end loaders. Industrial lift trucks are also utilized in the receipt (off loading) of feed materials.

The paved yard area is kept wet by water sprinklers. Many of the sprinkler heads are mounted at elevated locations on the sides of buildings. The sprinklers activate automatically at preset intervals. The fixed sprinklers are supplemented by mobile sprinkling trucks and wet sweeping units. Water hoses are also used by employees to wet down surfaces and to clean up mud, etc. Wet suppression of yard dust is feasible at this smelting location since the climate is moderate with infrequent freezing weather.

Charge Storage and Preparation

The Charge Storage and Preparation Building (refer to Figure 60) is a large concrete structure with concrete floors and multiple roll-up access doors. To aid in dust suppression, the floors of this building are periodically wetted using water hoses. Feed materials are stored in large bins separated by concrete partitions. No processing of feed materials takes place in this building. Those batteries which are received in whole form are not decased and remain somewhat intact through the materials handling, charge bedding, and furnace charging operations. Other charge materials have been processed by scrap dealers, etc. These materials (battery plates, etc.) are mixed with other materials in the bedding procedure.

One rubber-tired, diesel-fueled front-end loader is routinely assigned to this building and performs materials off-loading, storage in bins, charge bedding, and furnace charging. This

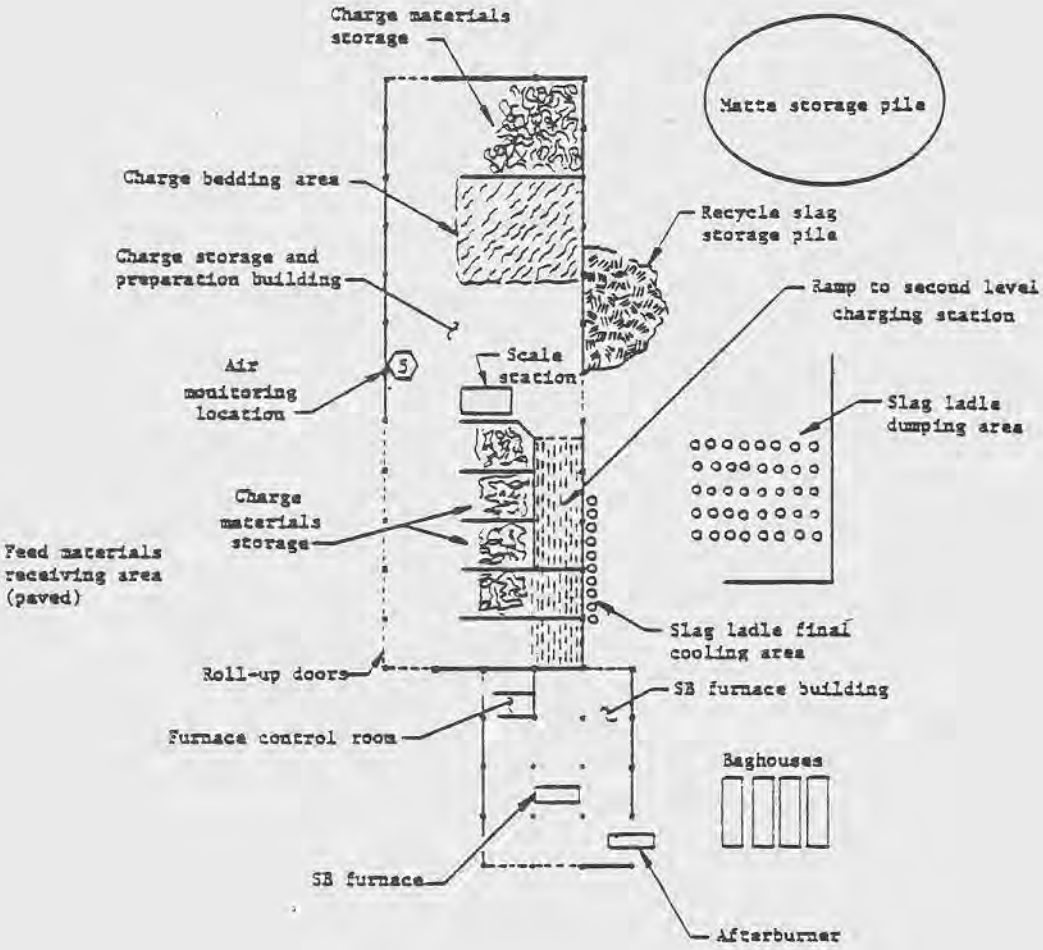

Figure 60. Overview of SB furnace building and charge storage and preparation building.

front-end loader is equipped with a filtered air supply to the operator's cab.

SB Furnace Charging Facilities

The charging of the SB furnace is performed on the second level of the SB Furnace Building (refer to Figure 60). An indoor ramp connects this area with the Charge Storage and Preparation Building. Charge materials are transported via front-end loader up this ramp from the charge bedding area and deposited in the top of the furnace. This charging area is isolated from the other work areas in the SB Furnace Building by a concrete floor.

The top of the SB furnace is provided with an exhaust hood which continually controls emissions from the furnace top. Figure 61 shows a sketch of the SB furnace charging hood. This hood is part of the integrated ventilation control system which is schematically shown in Figure 62.

Performance of the ventilation system is monitored through use of sensing devices (static pressure, temperature) which are connected to an operator's control panel located in the process control room on the ground level of this building. Additionally, closed circuit TV cameras are trained on the charging hood with TV monitors provided in the process control room. This TV system can be used to monitor the performance of the charging hood and also determine the need to add more material to the furnace.

Aside from the front-end loader operator, no employee routinely works in the SB furnace charging area.

SB Furnace Operating Area

Most of the work involved in operating the SB furnace is performed in the ground level work area of the SB Furnace Building. A sketch of this work area is shown in Figure 63. As can be seen from the figure, the process or operator's control room is located on this level together with the lower portion of the SB furnace.

All of the activities normally performed at the base of a vertical shaft smelting furnace are performed in this work area. Slag and finished hard lead are tapped from the furnace into receiving ladles or crucibles. Emissions from these operations are controlled by local exhaust ventilation hoods which are part of the integrated ventilation system for the SB furnace previously referred to in Figure 62.

Figure 64 shows an overview of the local exhaust ventilation controls associated with the base of the SB furnace. Hood F assists in the capture of emissions from slag tapping and from tuyere punching operations.

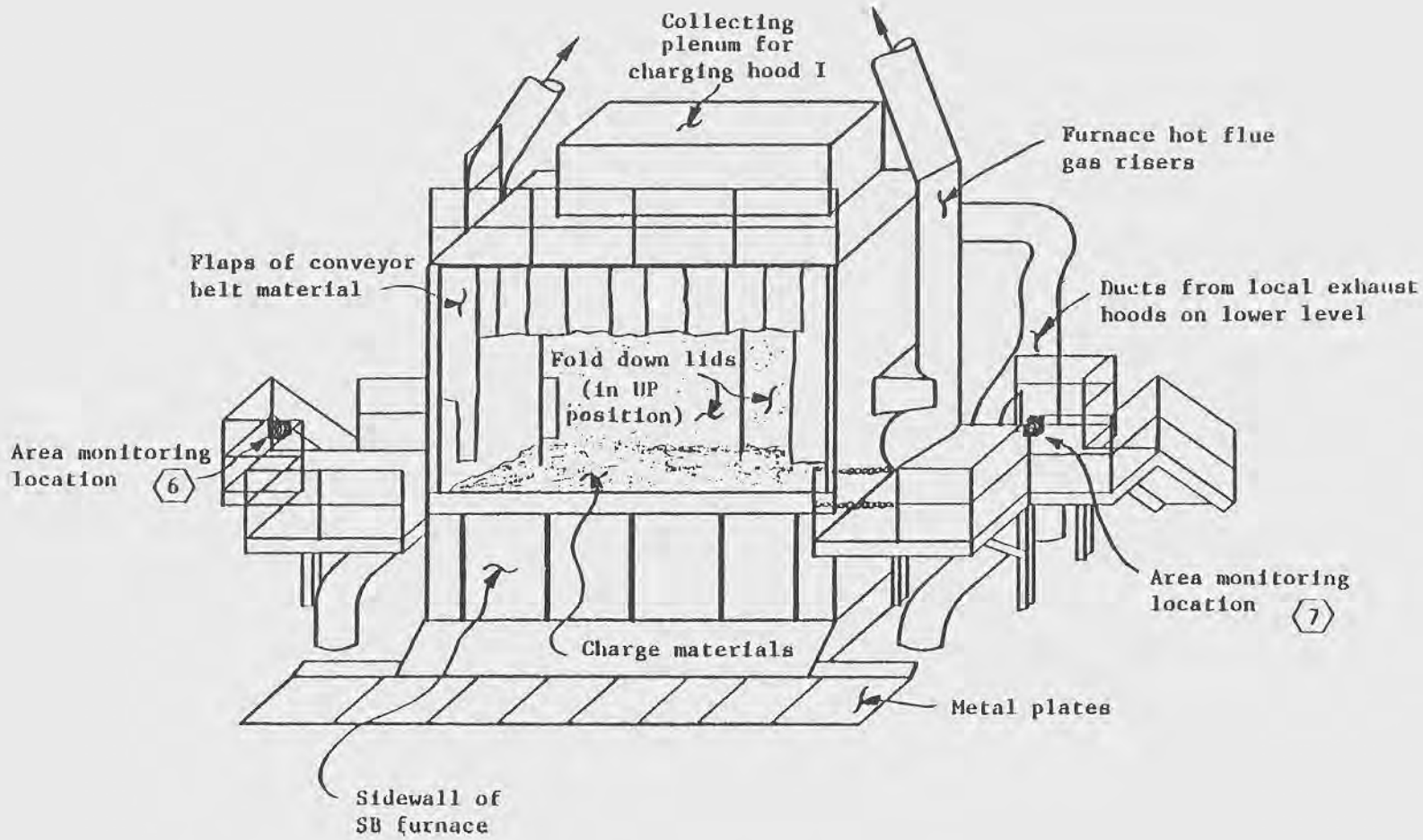

Figure 61. Furnace charging hood (Hood I).

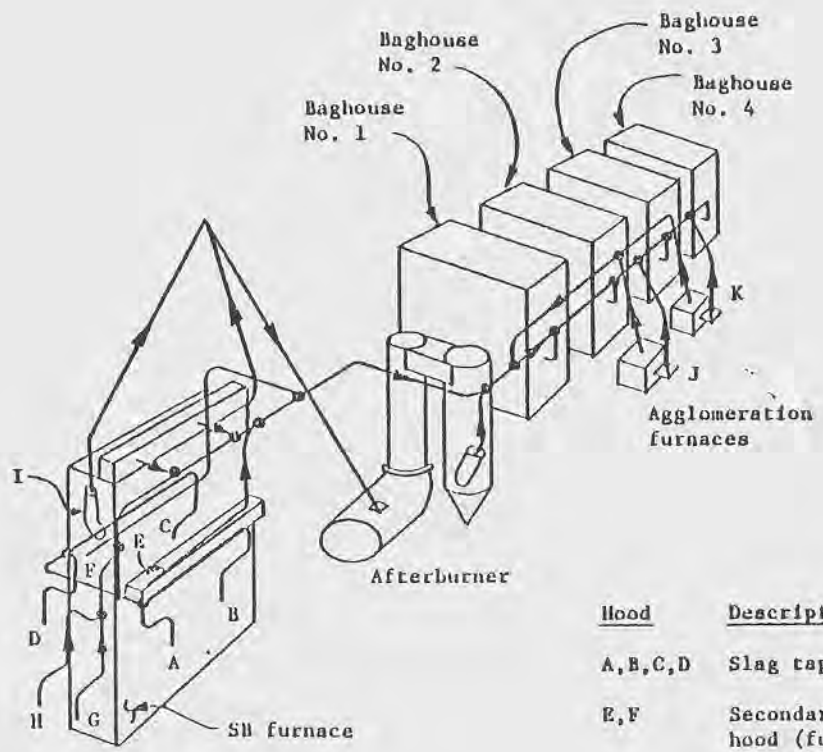

Hood	Description
A,B,C,D	Slag tapping hood
E,F	Secondary slag tapping hood (fugitive emission plenum)
G	Finished metal tapping hood
H	Finished metal ladle cooling hood
I	Charging hood
J,K	Agglomeration furnace ladle hood

Figure 62. Key to local exhaust ventilation hoods associated with SB furnace and agglomeration furnaces.

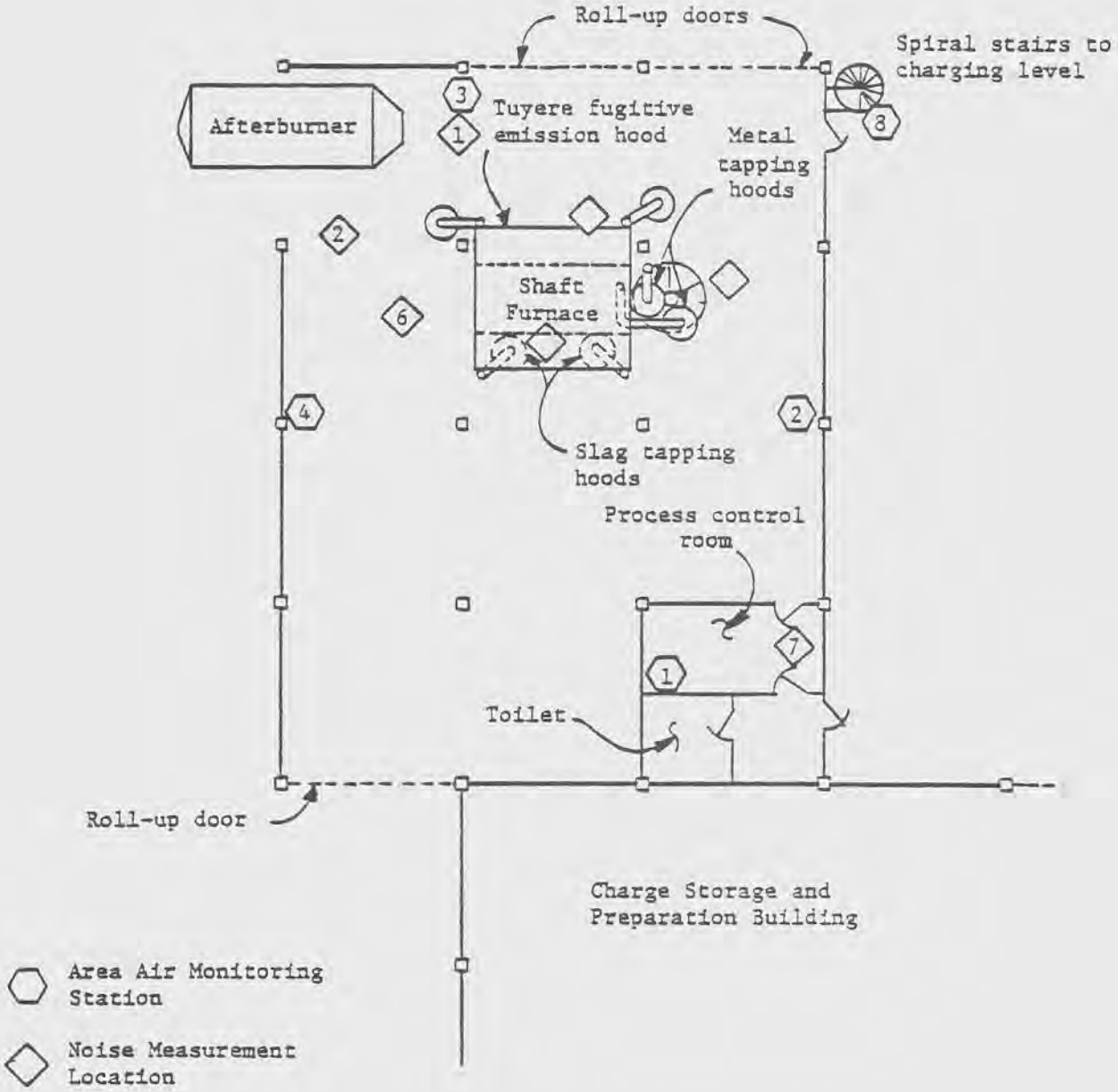

Figure 63. SB furnace ground level work area, SB furnace building.

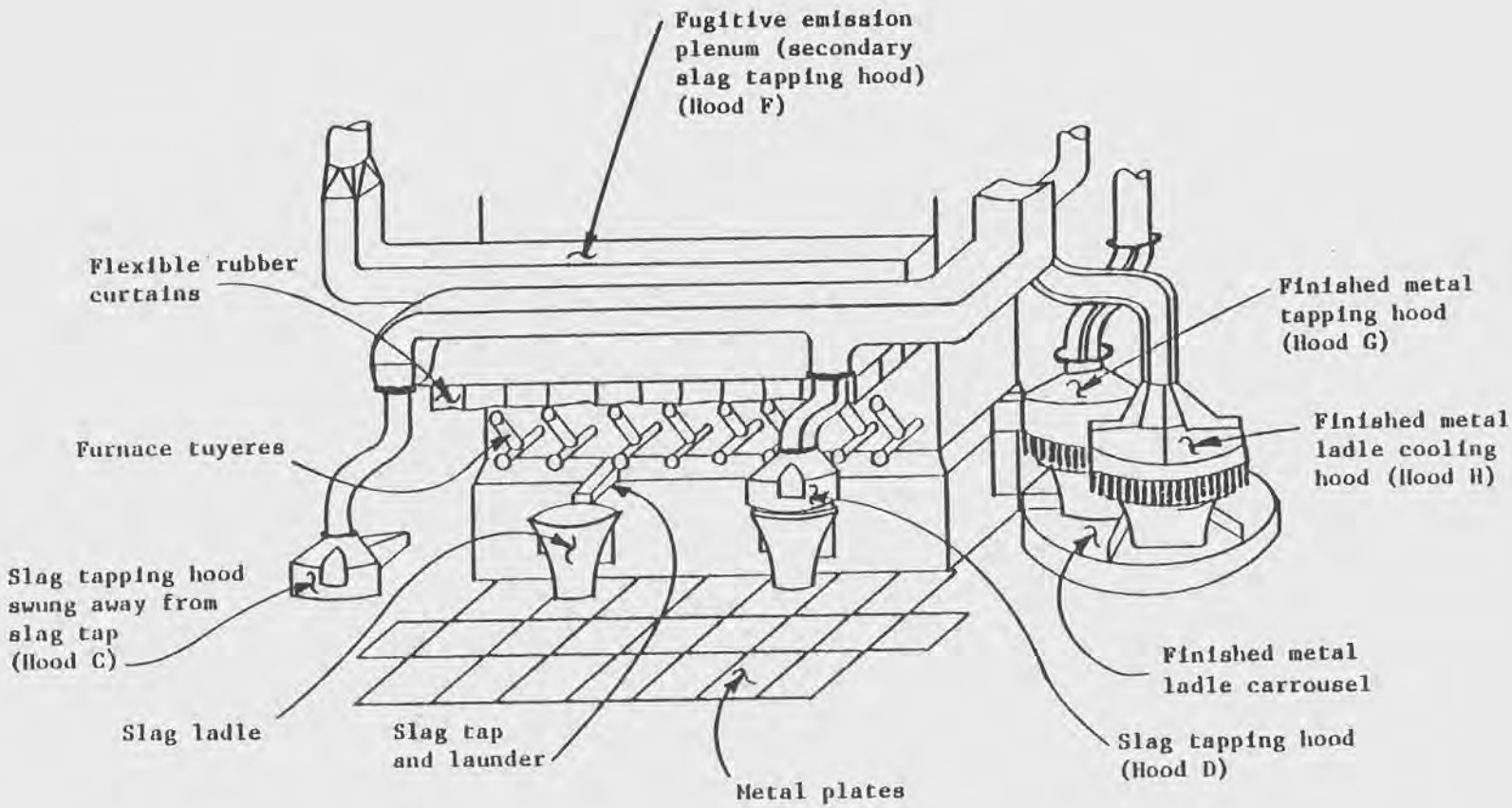

Figure 64. Overview of exhaust ventilation controls for the tapping of slag and finished metal.

Slag and finished metal ladles are handled by forklift truck. The floors in this operating area are frequently washed down through use of a water hose. The four furnacemen and one furnace foreman do not wear respirators while working in this area though they are accessible for emergencies.

The process control room is located adjacent to this work area. It is not equipped with special filtered ventilation and opens directly to the process work area. Furnace operating personnel spend varying amounts of time in the control room where consumption of beverages and smoking are permitted.

Also located in this general work area is the oil-fired afterburner for the SB furnace flue gas control system (refer to Figures 62 and 63). No controls other than the process ventilation system are provided for this afterburner. The final stages of the afterburner allow entry of dilution air for cooling and pressure relief in the event of explosion. Agglomerated material from the afterburner is collected in a slag ladle and emptied as necessary.

SB Furnace Integrated Ventilation System

Several references have already been made to the integrated ventilation system for the SB furnace as depicted in Figure 62. The system is "integrated" in that it handles both furnace flue gases and air collected by local exhaust ventilation hoods.

The SB furnace uses preheated blast air which is injected into the furnace through the tuyeres shown in the sketch in Figure 64. The flue gas stream beyond the smelting zone in the furnace rises and is collected by a header (doghouses) just below the charging level in the furnace. The flue gases captured by these doghouses are ducted away from each side of the furnace as shown in Figures 61 and 62. Each of the flue gas risers is steeply angled to an apex where the two streams merge and flow down to the afterburner located at ground level. The steep inclination of these ducts reportedly makes them self-cleaning; however, occasional cleaning may be required.

After being processed through the afterburner, where some dilution air enters, the flue gas stream is combined with the air drawn in through the local exhaust ventilation hoods. The quantity of local exhaust air mixed with the flue gas stream is regulated to keep the stream temperature below 130°C (266°F). Shortly thereafter this air stream is joined by the flue stream from the flue dust agglomeration furnaces and then is processed through baghouse filters. The baghouses are equipped with doors for cleaning and bag replacement. Following the baghouses the exhaust stream is pulled through large exhaust fans and then ducted to a tall stack.

Flue Dust Handling

Flue dust collected in the baghouse filters is screw conveyed to the agglomeration furnaces shown in Figure 62 and Figure 59. As stated earlier, the flue gas emissions from these furnaces are collected by the integrated ventilation system. Local exhaust ventilation in the form of a canopy hood is provided over the slag ladle as shown in Figure 65.

As slag ladles are filled with agglomerated flue dust, they are removed by forklift truck. The agglomerated material is stored inside to prevent it from weathering and returning to a dust form.

DESCRIPTION OF EMISSION SOURCE AND POTENTIAL EXPOSURE

Materials Handling Emissions

At this smelter there are several situations where employees can be exposed to contaminants emitted by materials handling. The following paragraphs describe these situations, the employee interaction with the emission source and the control of the source.

Receipt of Materials--
Off-loading and handling of raw materials can generate airborne contamination. A varying number of employees may participate in raw material receiving at this smelter. Usually an equipment operator is involved who may be the individual assigned to the Charge Storage and Preparation Building or a person who routinely operates a front-end loader in the yard areas of the plant. Occasionally, a general laborer or other person may assist in raw material unloading.

As stated earlier the yard area is paved and kept wet. Prompt attention to moving received materials to their respective inside storage areas is exercised. At the time this evaluation was conducted, scrap batteries were also stored in piles outside the Charge Storage and Preparation Building. Employees do wear respirators when handling dusty materials. One of the front-end loaders is equipped with a filtered, air-supplied cab. Contamination tracked into the cabs of front-end loaders is periodically cleaned by flushing the cabs with water sprayed from a hose. Hoses are also used to flush the yard area with water to remove heavy mud accumulations. Additionally, the yard is routinely swept with a large mechanical wet sweeper and wetted using a sprinkler truck.

Storage and Handling of Charge Materials--
At this smelter, charge materials are mainly stored and handled inside. Contamination generated by handling charge materials is largely confined to the Charge Storage and Preparation Building.

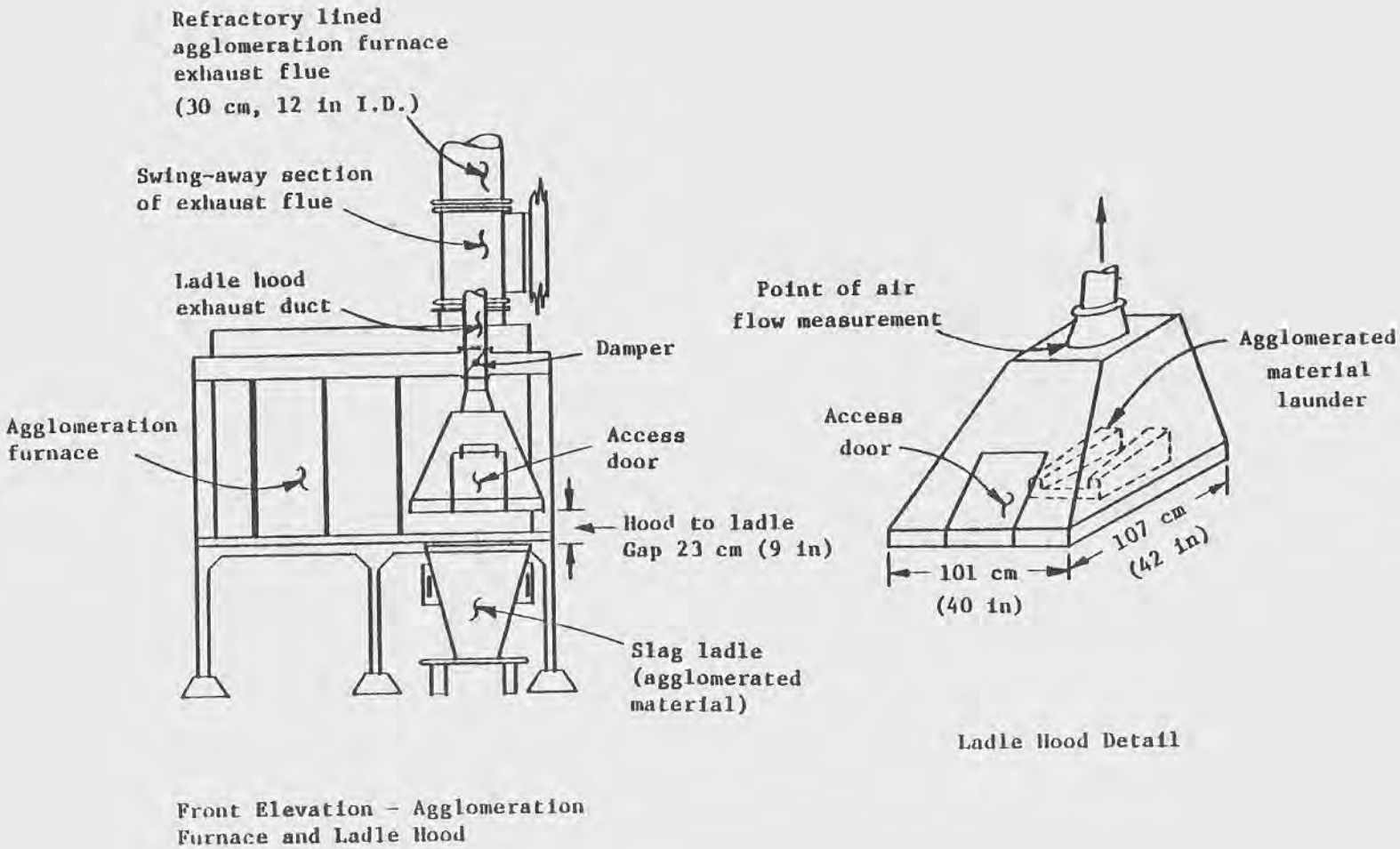

Figure 65. Agglomeration furnace and ladle hood (Hoods J and K).

Stockpiles of materials within the building are kept wet. One employee utilizes a front-end loader with a filtered, air-supplied cab to move materials. Contamination tracked out of this building by the front-end loader is controlled by the routine yard clean-up procedures.

Slag Handling--
When slag ladles are filled from the SB furnace, they are allowed to remain under the slag tapping hoods (refer to Figure 64) until the slag has cooled sufficiently to form a thick crust. The ladles are then moved by lift truck out of the operating area to a final cooling area as shown in Figure 60. Here the ladles cool until the slag completely solidifies. Later a lift truck dumps the slag out of the ladles into the paved yard area provided for that purpose (refer to Figure 60). Still later, a front-end loader is used to separate the slag from the matte which forms in the very bottom of the slag ladle. This same front-end loader moves the slag and matte to separate outdoor storage piles.

The procedures described above are directed at minimizing potential fume emissions from molten slag and dust emissions from handling solidified slag. Intimate employee contact with slag and matte materials is precluded by use of mechanized materials handling equipment which does not create significant granulation of slag materials. Wetted operating floors and yard areas help prevent settled dust from becoming airborne. Some fume emission may be occurring from the slag ladles at their final cooling station. No control of this possible emission source is present. Employees do not routinely work near the cooling slag ladle.

Finished Metal Handling--
When finished metal ladles are filled from the SB furnace, they are allowed to remain under the finished metal ladle cooling hood (refer to Figure 64) until the metal has substantially solidified. Allowing the ladles to cool under the local exhaust ventilation rather than in the open air helps to reduce the fume emissions during cooling and during any handling of the ladle while the metal is still molten. The ladle is then moved outside by forklift truck. Later, the metal ingot is elevated from the ladle using a forklift truck as a hoist. The metal ingots are stockpiled in the yard area until shipped or transported to refining operations.

Flue Dust Handling--
Flue dust which collects in the baghouse is screw conveyed to the agglomeration furnaces. Screw conveyors can be a potential emission source since they tend to leak near rotating shafts, bearings, access doors or lids, etc. At this smelter, settleable particulate which escapes the screw conveyors will fall to a paved area below the baghouses and/or near the agglomeration furnaces. Here the dust would be wetted and eventually flushed into drains and sumps. Nonsettleable particulate which escapes from

the screw conveyors would contribute to general ambient contamination.

The agglomerated dust is slag-like in appearance and is handled by forklift truck while contained in slag ladles. It is not permitted to weather outside which would result in its return to a dusty state. Employees are not routinely assigned to work in areas near the agglomeration furnaces.

Residues from Drains and Sumps--
The paved yard surfaces and floors inside operating areas are sloped to drains and sumps. These water collection points are routinely cleaned to remove deposits of mud. Given the wetted nature of the material, dust generation is not an immediate hazard. Splashes of particulate laden water, if allowed to dry on work clothing, tools, or work surfaces, could become a source of airborne contamination.

The deposits or residues from these sumps are recycled to the smelting process to recover their lead content. These materials are stored indoors and kept wetted until charged to the smelting furnace.

Residues from Furnaces, Flues, and Ductwork--
Routine maintenance at this smelter includes cleaning dusts and residues from flues and ductwork. These periodic cleaning procedures create opportunities for employee exposures. Employees do wear respirators during these cleanup operations, some of which take place on a weekly basis.

When the entire SB furnace is shut down, the furnace cavity, flues, ductwork, etc., are cleaned, inspected, and repaired. These maintenance activities can generate emissions and the handling of residues also involves potential exposures. Employees are required to wear respirators during these activities. Furnace shutdown periods have ranged in length from a few days to a dozen or more days depending on the extent of maintenance required.

Charging Emissions

The depositing of material in the top of the furnace can potentially expose employees to emissions from handling the charge material and emissions from the furnace, such as flue gases which escape from the furnace top. Both of these emissions would emanate from Hood I shown in Figure 61.

As stated earlier, only one employee spends any significant amount of time in the furnace charging area. This employee operates a front-end loader equipped with a cab supplied with filtered air.

Slag Tapping

Slag is tapped at each of four slag tap holes provided at the base of the furnace. Each of these tap holes is equipped with a short launder. A sketch showing the approximate location and configuration of the slag tap holes is shown in Figure 64.

Slag is tapped from each of the four tap holes. Tapping involves removing the tap hole plug and allowing the slag to flow down the launder into a slag ladle. Unique tap hole plugs are used at this smelter which consist of a tapered wooden plug surrounded by a refractory clay (refer to Figure 66). This plug is placed in the tap hole and tamped tight. A small amount of clay is added behind the plug. When the furnace is tapped, a bar is used to punch out the wooden core of the plug. Once the center is clear, the hole can be easily enlarged by dislodging the surrounding clay portion of the plug. This technique eliminates the need for drilling out the tap holes, using sledge hammers, etc., and insures that the tap hole perimeter will remain intact and not emit excessive quantities of furnace gases.

The slag tapping operation just described can be performed through an access door in the hoods provided for slag tapping. A slag ladle is positioned under the tap hole. The slag tapping hood is moved into position over the ladle and slag launder, and the tap hole plug is removed allowing the slag to flow into the ladle. When the ladle is filled, a new plug is installed by feeding it through the access door in the slag tapping hood (refer to Figure 64). The ladle remains under the tapping hood until a substantial crust forms.

The movable slag tapping hoods (Hoods A, B, C, D) and the secondary slag tapping hoods (Hoods E and F) have been provided to control emissions from slag tapping (refer to Figure 64). Employees do not wear respirators during slag tapping but do utilize face shields, gloves, etc. Slag tapping is a routine task for the furnacemen assigned to this work area. Slag tapping is almost a continuous operation with one of the four taps flowing every ten minutes.

Tuyere Punching

A sketch of the SB furnace tuyeres is shown in Figure 64 with a detail of an individual tuyere shown in Figure 66. Routine tending of the furnace involves examination of each tuyere through the transparent window shown in Figure 66. Periodically the tuyere cap is rotated and a steel bar is inserted to punch out the air flow passage. The secondary slag tapping hoods (Hoods E and F) are provided to help control any emission from the tuyere punching activity. Tuyere punching is a routine task for the furnacemen assigned to this work area. Tuyeres are examined and

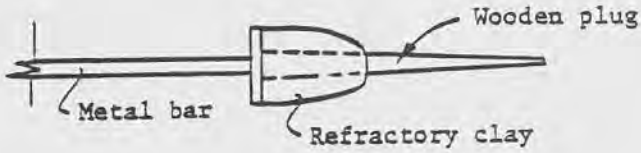

Slag Tap Hole Plug

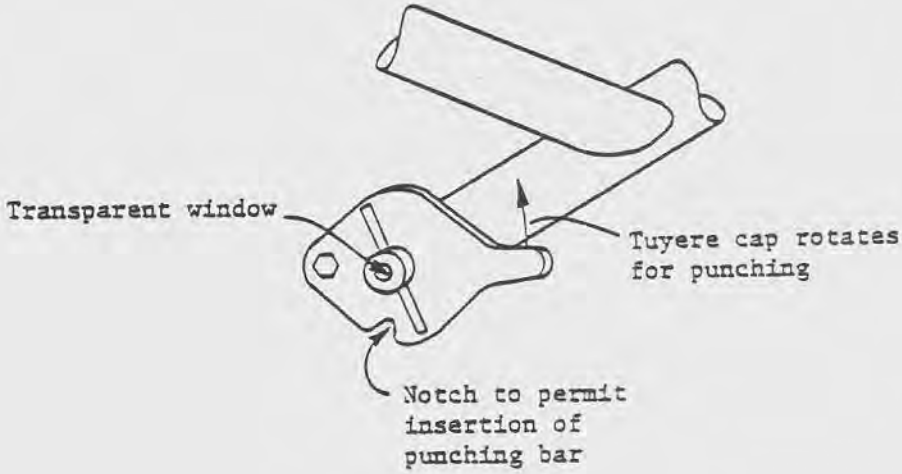

SB Furnace Tuyere

Figure 66. Details of slag tap hole plug and tuyere design.

punched as necessary at varying intervals throughout the work-shift.

Finished Metal Tapping

Finished metal is tapped at one end of the SB furnace as shown in Figure 64. The molten metal is an obvious source of contaminant emission. Exhaust hoods have been provided for the finished metal tap hole, launder, and receiving ladle (Hood G, Figure 64) and for the filled receiving ladle as it cools (Hood H, Figure 64).

Tapping of the furnace can be performed with Hood G in position over the tap hole, launder, and ladle. One of the four furnacemen usually tends to the finished metal tapping operation which is nearly continuous. As the ladles are filled and rotated under the cooling hood (Hood H) the furnaceman swings Hood H away for a few moments so he can insert steel-lifting handles into the molten finished metal. No control for employee exposure during this handle insertion is provided.

Afterburner Slag Port

The afterburner is equipped with a slag port which empties into a slag ladle. No control is provided for fume emissions which may emanate from this source. The afterburner slag tap port is located near the work area where furnacemen prepare the slag tap hole plugs. There is a potential for some exposure from this source. In comparison to other emission sources in this general work area, the afterburner slag tapping port should be classed as a low-order emission source.

Agglomeration Furnaces

The agglomeration furnaces are located outdoors in an area not frequently visited by employees. The flue gas streams from these agglomeration furnaces and emissions from the slag launder and ladle can contribute to air contamination. The flue systems for these furnaces are cleaned at weekly intervals. The swing away section of the flue directly above each furnace was designed to facilitate this periodic cleaning (refer to Figure 65). A local exhaust ventilation hood is provided for the slag ladle and launder. Possible emissions from these furnaces are not expected to significantly contribute to employee exposures on a day-to-day basis.

Baghouse Bag Replacement

Manual replacement of bags during preventative maintenance or repair work in the four baghouses creates the potential for employee exposure. There is sufficient baghouse capacity at this smelter to allow shutdown of one baghouse while the other three

remain in operation. Workmen who perform bag changes are required to wear respirators.

ENGINEERING CONTROL EVALUATION

Engineering control of employee exposure to lead and other contaminants at this smelter was evaluated using three basic sources of information: engineering measurements and design considerations; observations; and air sampling information. The sampling and analytical techniques used are NIOSH recommended physical and chemical analytical methods document 173 (P&CAM 173).

Raw Materials Handling

Engineering Measurements--
The engineering controls of interest to raw materials handling are: the use of sprinklers to suppress dust levels in yard areas; the use of a front-end loader with filtered air supply to handle raw materials; and the provision of a materials storage and preparation building to confine and suppress airborne contamination associated with raw materials handling. These controls were evaluated through observation and air sampling.

Observations--
Yard areas were observed to be kept moist by both fixed and mobile sprinkling units. The floors of the Charge Storage and Preparation Building remained wet in many areas, damp in others. Movement of the front-end loader within this building did not create generation of visible airborne dust. The front-end loader operator remained inside the filtered air cab except when reporting to the SB furnace control room and lavatory area. The doors and windows of the front-end loader cab were kept closed. The roll-up doors to the Charge Storage and Preparation Building were opened and closed as necessary to allow flow of materials. Several roll-up doors were left open on the days evaluated.

Air Sampling--
To evaluate the effectiveness of the raw materials handling procedures employed at this smelter, several air samples were gathered and analyzed. The results of this air sampling are shown in Tables 18 and 19.

Air samples collected inside the cab of the front-end loader (Table 18, Charge Preparation and Chargeman) indicate lead-in-air concentrations of 85 and 58 ug/m^3 on consecutive days. The initiation of sampling on the second day was delayed until a flat tire on the front-end loader was repaired.

Two samples collected along the wall of the Charge Storage and Preparation Building (Table 19, Area Number 5, see also Figure 60) indicated lead-in-air concentrations of 24 and 16 ug/m^3. Additionally, air samples gathered at either side of the charging

Table 18. Breathing Zone, Lead-In-Air Concentrations Associated with SB Furnace Operations*

	Sampling Interval	Lead-In-Air Exposure ug/m^3 During the Interval Sampled
September 26, 1978		
Blast Furnace		
Foreman (JA)	6:21a - 10:57a	99
Furnaceman (IM)	7:34a - 1:33p	43
Furnaceman (LA)	6:15a - 1:37p	57
Furnaceman (EJ)	6:18a - 1:38p	83
Furnaceman (HP)	6:16a - 1:38p	14
Charge Preparation and Chargeman (DA)	7:03a - 1:40p	85
September 27, 1978		
Blast Furnace		
Foreman (JA)	6:08a - 12:23p	110
Furnaceman (MA)	6:00a - 1:43p	35
Furnaceman (CO)	6:03a - 1:50p	110
Furnaceman (MD)	6:05a - 1:44p	38
Furnaceman (BB)	6:17a - 1:49p	79
Charge Preparation and Chargeman (DA)	8:07a - 1:55p	58

*Samples were collected on cellulose ester membrane filters with 0.8u pore size and were analyzed using atomic absorption spectrophotometry (P&CAM 173).

Table 19. Work Area Lead-in-Air Concentrations Associated With Operation of the SB Furnace

Area Number	Sampling Location**	Sampling Interval	Lead-In-Air Exposure ug/m^3 During the Interval Sampled*
September 26, 1978			
1	Process control room	6:24a- 1:50p	38
2	At wall near lead tapping end of furnace	6:30a- 1:50p	23
3	At wall near after-burner	6:43a- 1:50p	<10
4	At wall near tapping plug preparation area	6:35a- 1:51p	15
5	At side wall near center of charge preparation building	6:56a- 1:55p	24
6	At working platform on left side of charging hood	6:48a-11:30a	79
7	A working platform on right side of charging hood	6:50a-11:30a	65
8	Near spiral stairs to charging level	--	--
September 27, 1978			
1	Process control room	6:00a- 1:55p	54
2	At wall near lead tapping end of furnace	6:12a- 1:45p	22
3	At wall near after-burner	6:33a- 1:58p	16
4	At wall near tapping plug preparation area	6:22a- 1:58p	22
5	At side wall near center of charge preparation building	6:36a- 1:55p	16
6	At working platform on right side of charging hood	6:07a- 2:00p	71
7	A working platform left side of charging hood	6:07a- 2:00p	85
8	Near spiral stairs to charging level	6:41a- 2:00p	<8

*Samples were collected on cellulose ester membrane filters with 0.8u pore size and analyzed by atomic absorption spectrophotommetry (P&CAM 173.)

**Refer to Figures 60, 61, and 63.

hood (Table 19, Area Numbers 6 and 7, see also Figure 61) indicated lead-in-air concentrations of (79 and 71) and (65 and 85) ug/m^3, respectively. These samples reflect both the effectivness of dust control in the Charge Storage and Preparation Building and the effectiveness of Hood I (Figure 61) in controlling emissions from charging and fugitive flue gas emissions.

One air sample was gathered outside, near an area of materials receiving (Table 19, Area Number 8, see also Figure 63). The sample indicated that the lead-in-air concentration for the period evaluated was less than 8 ug/m^3. This sample result should not be interpreted as establishing an ambient background.

SB Furnace Integrated Ventilation System

Engineering Measurements--
The evaluation of the integrated ventilation system (see Figure 62) involved measurement of air flows at several strategic points. It was not feasible to make measurements at every point of interest in the system. Physical access was the primary constraint in this regard.

Figure 67 shows the points at which ventilation measurements were made. Table 20 summarizes the hood entry coefficient measurements. Pressure and temperature measurements were made at each point indicated in Figure 67. However, these measurements and the resultant flow and velocity calculations were considered proprietary and are not reported here. Where appropriate, hood entry coefficients were estimated and are presented in Table 20. These measurements were made with all four baghouses in operation. Performance data concerning each of the many local exhaust hoods were gathered and will be presented in succeeding sections.

Observations--
The integrated ventilation system was observed to be in good repair. No serious dents or malformations of ductwork were found. The system is constructed of heavy gauge steel and is provided with access openings at strategic locations. The system is equipped with sensing devices (mainly temperature indicators) which relay information to the control panel in the process control room.

The SB furnace superintendent is thoroughly familiar with the design and performance of the system and routinely makes velocity traverses in key locations using a pitot tube and manometer. The process is equipped with static pressure and temperature sensing devices which can be monitored from the process control room. The baghouses are equipped with manometers so that bag loading, broken bags, etc., can be detected by operating personnel.

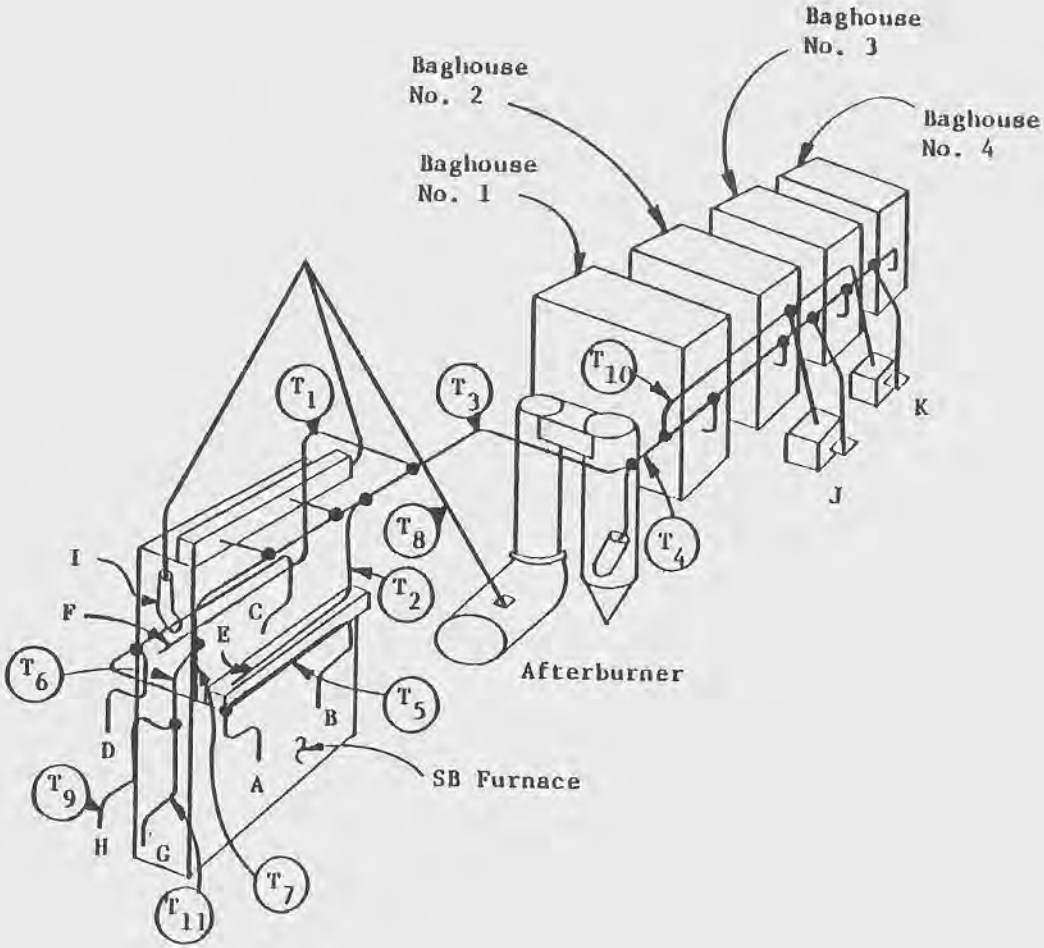

Figure 67. Key to ventilation system test points.

Air Sampling--
The integrated ventilation system works as a unit to control lead-in-air levels within the SB Furnace Building. Many of the emission sources controlled by the system are physically close together. Employees who work in this building spend varying amounts of time at different locations. For these reasons the results of air sampling performed during this evaluation (breathing zone and work area) are more indicative of total system performance and work practices than of performance of individual hoods, etc.

During the days evaluated, the roll-up doors to the ground level operating area of the SB Furnace Building remained open much of the time. Two consecutive day-shifts were monitored. A furnaceman crew change occurred between the first and second day of evaluation so possible differences in work habits are reflected in the data gathered.

Tables 18 and 19 contain the lead-in-air sampling data. Breathing zone measurements ranged from 14 to 110 ug/m^3 and averaged 65 ug/m^3 for persons working in the SB furnace operating area. Work area lead-in-air concentrations measured in the SB furnace operating areas ranged from less than 10 to 54 ug/m^3 and averaged 25 ug/m^3. It is interesting to note that the highest work area lead-in-air concentration in the SB furnace operating area was found in the process control room.
A few work area air samples were also collected and analyzed for arsenic. The results of this sampling are contained in Table 21. No result greater than 0.32 ug/m^3 was found.

SB Furnace Charging Hood (Hood I)

Engineering Measurements--
A sketch of Hood I is shown in Figure 61. Figure 68 contains dimensional information and air flow measurements. The hood provides a minimum of 0.76 m/s (150 fpm) across its face. An Alnor® Velometer, Jr., was used to measure face velocity.

Observations--
Smoke rising from the charged material inside the hood was observed to remain within the hood. Smoke generated at the edge of the hood and at locations in front of the hood face (using ventilation smoke tubes) indicated air movement into the hood at all positions.

Charging the furnace via the front-end loader was observed and no visible emissions were seen to escape from the hood.

Air Sampling--
Air samples were collected at the work platforms on either side of the charging hood (refer to Figure 61). The results of these

Table 20. Summary of Hood Entry Coefficients in SB Furnace and Agglomeration Furnaces Ventilation Systems*

	Hood Entry Coefficient Cs***
T_1	0.58
T_2	0.56
T_3	
T_4	
T_5	0.57
T_6	
T_7	
T_8	
T_9	0.05
T_{10}	
T_{11}**	0.76

*Air flow measurements were made using a pitot tube and inclined manometer; in-duct velocities, flow rates, temperatures, and pressure data were considered proprietary and are not reported here.

**Calculated results.

***$Cc = \sqrt{VP/SP_h}$, where SP_h - hood static pressure.

Table 21. Work Area Arsenic-In-Air Concentrations Associated With Operation of SB Furnace*

Area Number	Sampling Location**	Sampling Interval (9/27/78)	Arsenic Concentration ug/m^3 During the Interval Sampled
2	At wall near lead tapping end of furnace	6:12a- 1:45p	0.32
3	At wall near after-burner	6:22a-12:22p	0.15
6	At working platform left side of charging hood	6:17a- 2:00p	0.11

*Samples were collected on a cellulose ester membrane filter with 0.8u pore size and were analyzed using the arsenic/borohydride method. (Pierce, et al; Applied Spectroscopy, (30), 1976).

**Refer to Figures 53 and 55.

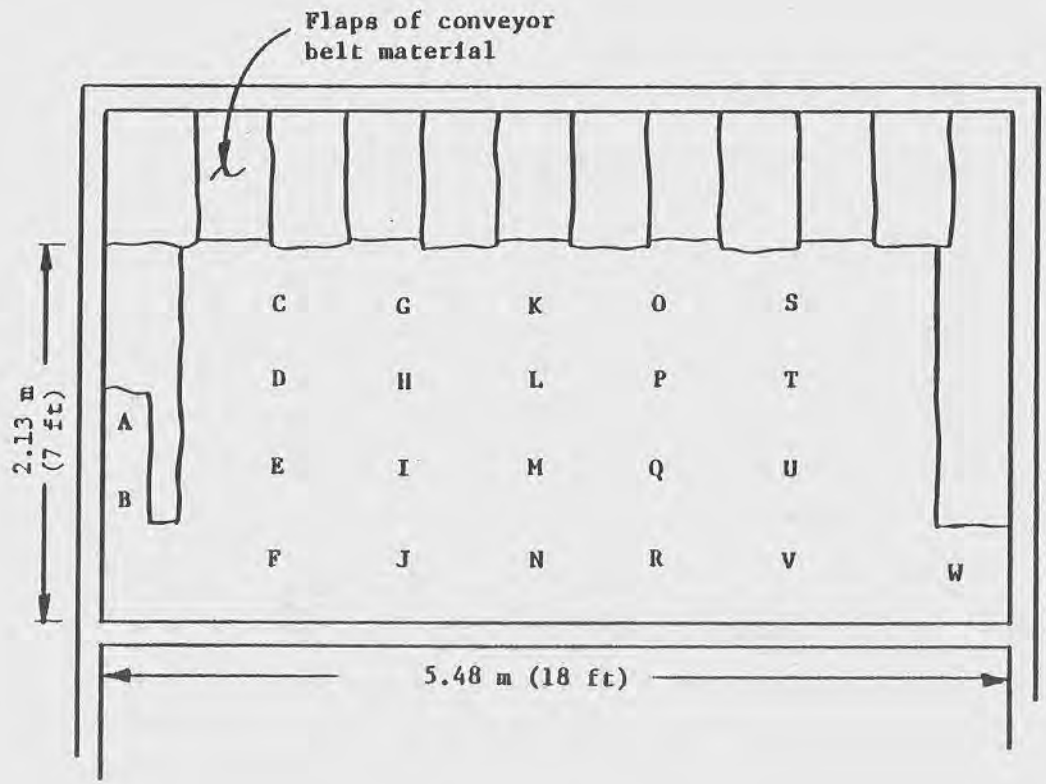

Face Velocity Measurements

Pt	m/s	fpm
A	1.0	200
B	1.0	200
C	1.5	300
D	1.5	300
E	1.3	250
F	0.89	175
G	0.89	175
H	0.89	175
I	0.89	175
J	1.0	200
K	1.0	200
L	1.0	200
M	1.0	200
N	1.0	200
O	1.0	200
P	1.0	200
Q	0.76	150
R	0.76	150
S	1.0	200
T	1.0	200
U	1.0	200
V	1.0	200
W	0.76	150

Figure 68. Face velocity measurements - furnace charging hood (Hood I).

measurements are contained in Table 19 and are only partially indicative of the hood's performance. These sampling results reflected general workroom contaminant levels in the charging work area, as well as possible contamination escaping from the hood.

Slag Tapping Hoods (Hoods A, B, C, D)

Engineering Measurements--
The SB furnace is equipped with four slag tapping hoods (Hoods, A, B, C, D). These hoods are ducted into the integrated ventilation system as shown in Figure 62. These hoods work together with other exhaust ventilation as shown in Figure 64. The hoods are essentially identical in design. All are constructed from heavy metal, employ external duct fins or webs for structural support and are made movable through use of high quality swivel bearings. Figure 69 provides dimensional information concerning these hoods and air flow data. An Alnor® Velometer was used to evaluate air flows associated with these hoods.

Figure 70 illustrates the relationship of the slag hoods to the slag ladles. Air velocities measured at the access opening and along the gap between the hood and ladle are indicated. As can be seen from the data, these hoods afford vigorous face velocities.

Observations--
The slag tapping hoods were used by all furnacemen. As stated earlier, the slag tap holes at the side of the SB furnace can be opened and closed through use of implements inserted through the access opening in the slag tapping hood. Several tap hole opening and closing operations were observed. The hoods appeared to capture virtually all smoke and fume emanating from the tap hole, slag launder, and slag ladle. Occasionally a heavy spark of molten material would escape through the front access opening.

Uniform flow into the slag hoods at all sides was confirmed through observation of smoke generated from ventilation smoke tubes.

Employees performing slag tapping operations always remained at least 1 to 2 meters (3-6 feet) from the hoods during tapping. Opening, closing, and tending of the tap hole were accomplished through use of long metal rods and other long-handled implements.

After slag ladles were filled, they were allowed to remain under the slag tapping hoods until a substantial crust had formed on the top of the molten slag. During the two days evaluated, no accidental spills of slag occurred. Furnacemen carefully maneuvered slag ladles using a forklift truck. In some instances

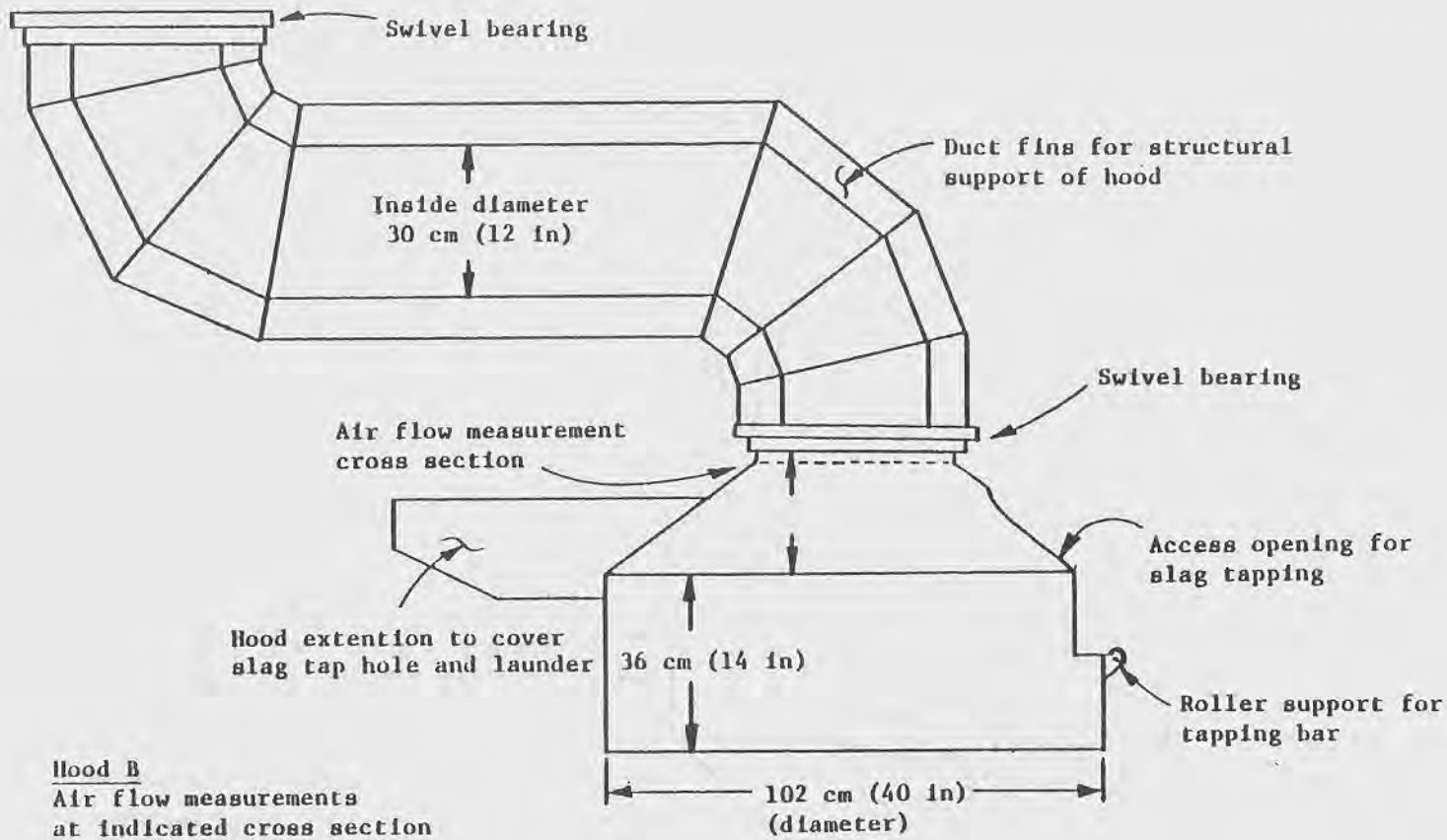

Hood B
Air flow measurements at indicated cross section

A = 0.0707 m^2(.785 ft^2)

Hood Entry Coefficient
Ce = 0.57

Figure 69. Side elevation - slag tapping hoods (Hoods A,B,C,D).

Face Velocity Measurements at Access Opening

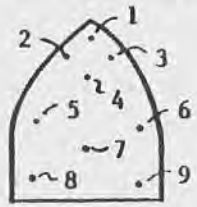

	Hood B		Hood D	
Pt	m/s	fpm	m/s	fpm
1	2.4	480	2.8	550
2	2.2	430	2.8	550
3	2.2	430	1.9	380
4	1.9	380	2.2	430
5	1.8	350	2.2	440
6	1.8	350	1.5	300
7	1.8	350	2.8	400
8	1.8	350	2.9	580
9	1.8	350	2.8	400

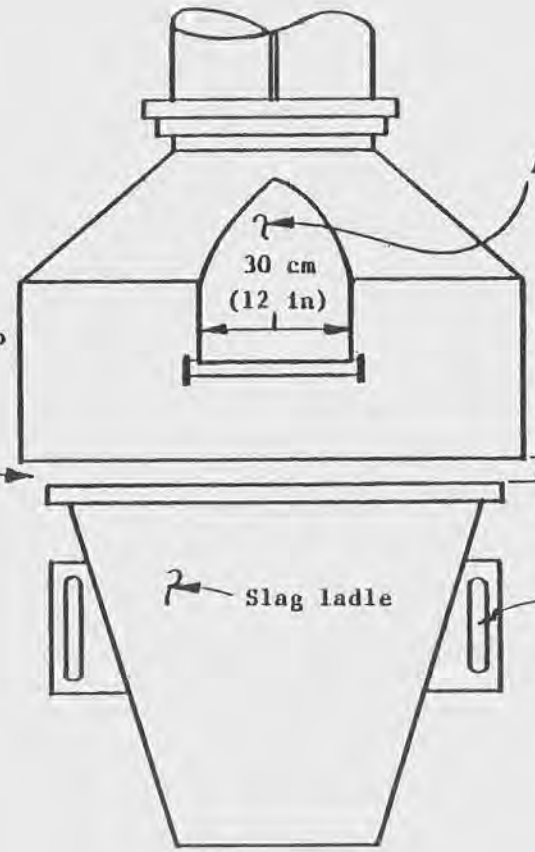

Figure 70. Front elevation - slag tapping ladle (Hoods A,B,C,D).

ladles were removed with the slag tapping hood still in position over the tap hole and launder.

Secondary Slag Tapping Hoods (Hoods E and F)

Engineering Measurements--
The SB furnace is equipped with two secondary slag tapping hoods (Hoods E and F) located along either side of the furnace. These hoods are ducted into the integrated ventilation system as shown in Figure 62. These hoods work together with other exhaust ventilation as shown in Figure 64.

Figure 71 provides additional information concerning these hoods. Data concerning air flow through the exhaust plenum are included in Table 20 (Test Point T_2). These hoods are intended to capture fugitive emissions from slag tapping and tuyere punching operations.

Observations--
Refer to Figure 74 for observations concerning hood performance.

Finished Metal Tapping Hood (Hood G)

Engineering Measurements--
Hood G is provided to control emissions from the finished metal tap hole, launder, and receiving ladle. Hood G is ducted into the integrated ventilation system as shown in Figure . This hood works together with other exhaust ventilation as shown in Figure 64.

Hood G, like the slag tapping hoods, is constructed of heavy gauge metal and employs external duct fins or webs for structural support of the hood (refer to Figure 72). The hood is made movable through use of swivel bearings. The bottom edge of the hood is equipped with hanging chains to help control any splashing of molten metal, increase face velocity at the gap between the hood and ladle, and facilitate rotation of ladles under the hood.

The access opening at the hood is used to observe and allow access to the finished metal tap hole.

Figure 72 provides dimensional information for Hood G. Face velocity measurements made at the access opening and near the hanging chains associated with the hood are indicated. An Alnor® Velometer was used to make these measurements. As can be seen from the data, Hood G provides vigorous air flow into the hood.

Figure 72 also contains calculated hood performance data. These data and others are also presented in Table 20 (Test Point T_{11}). Flow into this hood was determined by taking the difference in flows measured at Test Points T_6 and T_9 as shown in Figure 67.

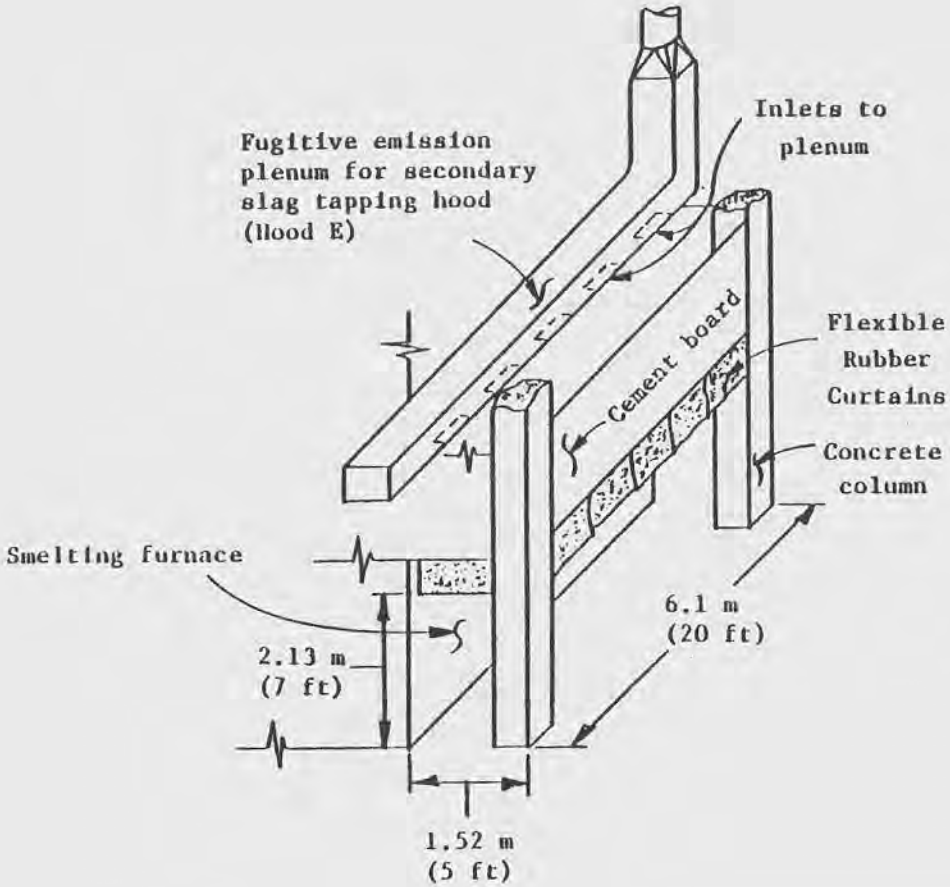

Air Flow Measurements

Hood Entry Coefficient
Ce = 0.56

- Air velocities near tuyeres and flexible rubber curtains were less than 0.13 m/s (25 fpm)
- Smoke generated inside the hood was observed to flow upward toward the exhaust plenum inlets
- Smoke generated near the flexible rubber curtains indicated low order turbulence on back side of curtains

Note: Details of slag ladles, slag tapping hoods, etc. are exluded from this figure for simplicity

Figure 71. Secondary slag tapping hoods (Hoods E and F).

Air flow measurements

Face velocity at gap
Near chains 1.5 m/s (300 fpm)
At front of hood in space with no chains 2.5 m/s (500 fpm)
Face velocity at access opening

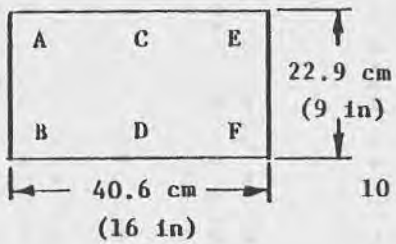

Pt	m/s	fpm
A	2.3	450
B	2.4	480
C	2.0	400
D	1.7	340
E	1.8	350
F	1.3	250

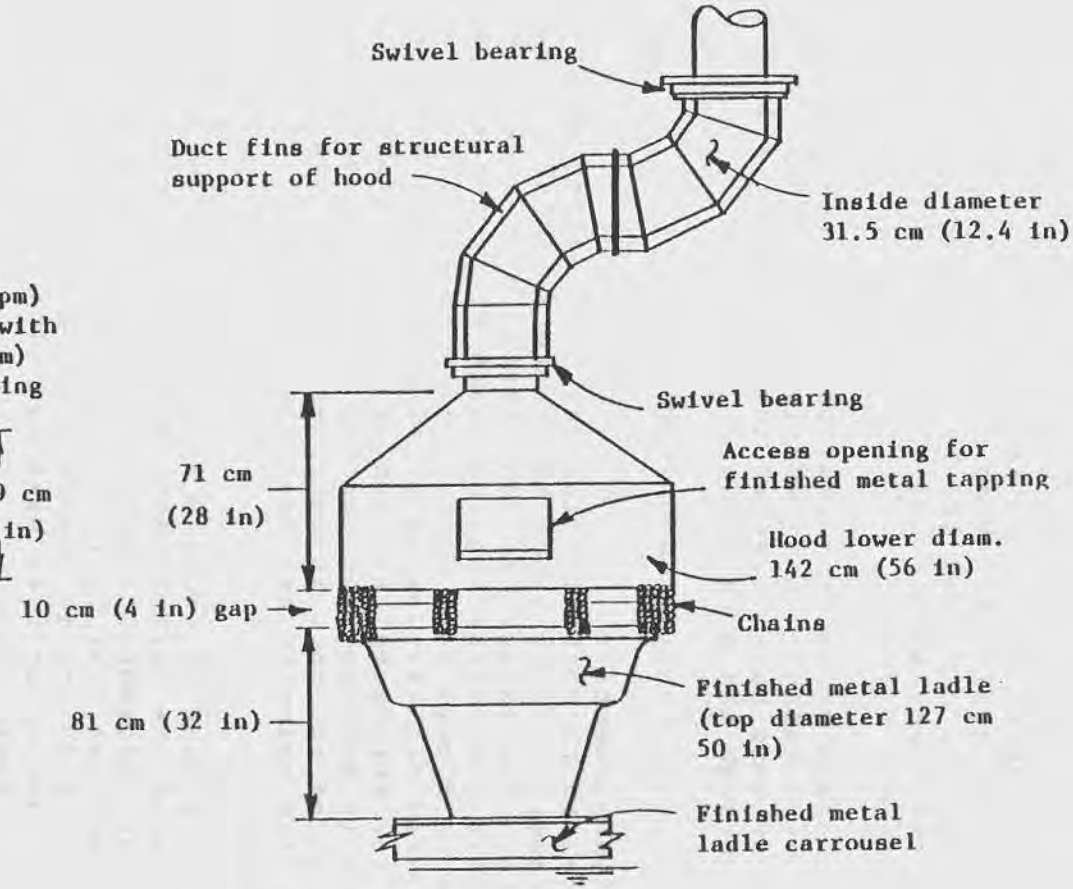

Figure 72. Front elevation of finished metal tapping hood (Hood G).

Observations--
Hood G appeared to capture all of the smoke and fumes emanating from the finished metal tap hole, launder, and receiving ladle. During the two days evaluated, Hood G was not moved from its position over the tap hole and launder. Smoke generated from ventilation smoke tubes at the edges of the hood indicated flow into the hood at all sides.

Occasionally a spark of molten metal was observed to escape from the front access opening. This usually occurred when the tap hole and launder were being cleaned through use of a long metal rod inserted through the access door.

Finished Metal Ladle Cooling Hood (Hood H)

Engineering Measurements--
Hood H is provided to control emissions from molten metal contained in a receivng ladle which has recently been filled. Hood H is ducted into the integrated ventilation system as shown in Figure 62. This hood works together with other exhaust ventilation as shown in Figure 64. Hood H, like Hoods A, B, C, D, and G, is constructed of heavy gauge metal and employs external duct fins or webs for structural support of the hood (refer to Figure 73). The hood is made movable through use of swivel bearings. The bottom edge of the hood is equipped with hanging chains to help improve face velocity and facilitate rotation of ladles under this hood.

As indicated in Figure 73, Hood H is a slotted hood. The slot evenly distributes the capture zone around the perimeter of the ladle. Air flow information gathered using a pitot tube and inclined manometer at Test Point T_9 (see Figures 67 and 73) is presented in Table 20 and in Figure 73. Additionally, slot velocities and face velocities measured with an Alnor® Velometer are included in Figure 73.

Observations--
Ventilation smoke tubes were used to generate visible smoke at the edge of this hood. The smoke was observed to flow into the hood at all locations around its circumference.

Hood H was swung away from over the cooling ladle to allow insertion of handles into the molten metal. This operation required only a few moments to complete but did require the furnaceman to lean over the ladle containing cooling molten metal. The employee did not wear a respirator when performing this task which occurred a few times each shift.

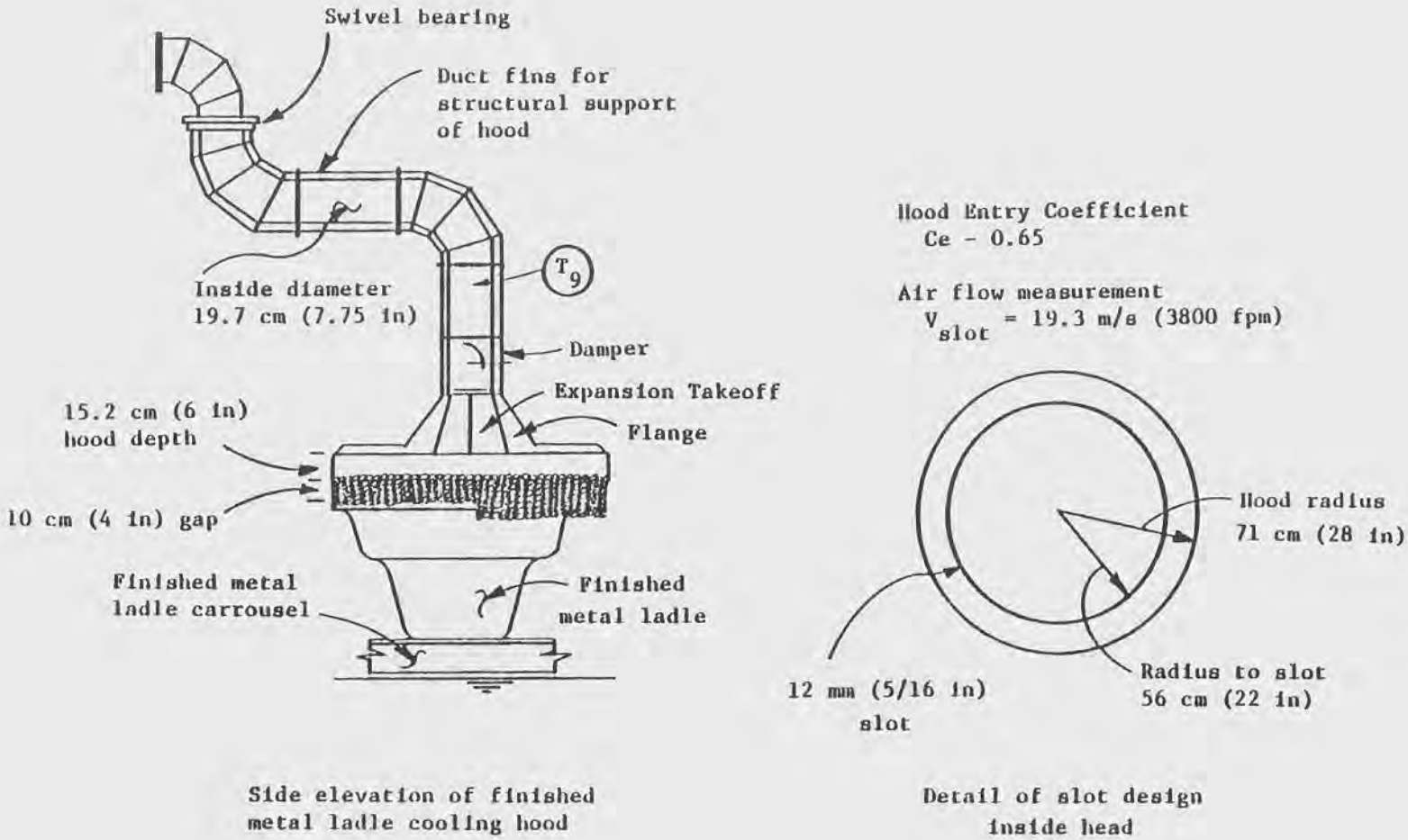

Side elevation of finished metal ladle cooling hood

Detail of slot design inside head

Figure 73. Finished metal ladle cooling hood (Hood H).

Agglomeration Furnace Ladle Hood (Hoods J and K)

Engineering Measurements--
Hoods J and K are ducted into the integrated exhaust ventilation system as shown in Figure 62. Dimensional information and proximity to the agglomeration furnaces are shown in Figure 65. Also included in Figure 65 is an estimate of the air flow through these hoods.

Face velocity measurements were precluded by significant ambient air currents present on the days evaluated. Hi-vol area sampling near the agglomeration furnaces detected 12 and 18 ug Pb/m^3 on the test days.

Observations--
The gap between the slag ladle and hood is quite large (refer to Figure 65). Smoke generated under and near the hood using ventilation smoke tubes was not effectively captured by the hood. Ambient air currents overpowered the influence of the hood and allowed generated smoke to escape.

OTHER INDUSTRIAL HYGIENE CONSIDERATIONS

Employee Work Schedules

The SB furnace operates continuously. Five teams of employees man three shifts of work. Each employee works an average of 36 hours per week.

Personal Protective Equipment

Clean trousers, shirts, and work jackets are furnished each week to employees. Employees provide and wash their own underwear. Use of gloves, safety helmets, and safety glasses is optional. Employees wear safety-toe-footwear and utilize faceshields during slag tapping. Respirators are required to be worn during furnace clean-up or repair, baghouse maintenance, and routine flue and duct cleaning. The charge preparation operator does not normally wear a respirator. He may elect to wear one during handling of particularly dusty materials which are occasionally received by the smelter.

Employee Hygiene

Employees are instructed to shower at the conclusion of each shift and to wash before eating. Locker room, shower, and lunchroom facilities provided at this smelter are not elaborate. Employees are permitted to smoke and consume beverages in the SB furnace process control room. It was observed that employees did not wash their hands each time they used smoking materials or consumed beverages in this area.

Biological Monitoring

Urine specimen collection and analysis are not performed. Blood samples are obtained from operating employees each month and from other employees on a quarterly basis. The results of blood lead monitoring are reported to employees, and the employees have access to all of their blood lead analysis results. The employee is informed that his result is acceptable (less than 70 ug Pb/100 g whole blood), marginal (71-90 ug Pb/100 g whole blood) or unacceptable (90+ ug Pb/100 g whole blood). The employee is also informed whether the result shows a strong increase, increase, no change, decrease, or strong decrease in blood lead level since the last test. The blood lead monitoring data supplied by the Bergsoe management are as follows:

ug/100 mL	Number of Persons, And Working History[1]
≤30	4, worked less than 6 months[2]
31-40	1, worked about 1 year
41-50	5, worked 1 1/2 - 2 years
51-60	7, worked 2 - 8 years
61-70	8, worked 1 1/2 - 4 years[3,4]
71-80	2, worked 2 and 8 years, respectively
Total	27 persons

[1]All samples were analyzed by a U.K. laboratory (NOSH). Recent intercalibrations with other laboratories strongly indicate that the results from NOSH are significantly higher than those of the official Danish Work Safety Laboratory (AMT). The statistical difference is no less than 29 percent, and if it were deducted it would bring the above figures below 60 ug.

[2]Tests taken upon employment.

[3]One man in this group worked 21 years in the plant.

[4]One of these tests was crosschecked with three other laboratories, all finding 10-15 ug less.

Workplace Air Monitoring

Reportedly, many workplace lead-in-air measurements were made shortly after the SB furnace was made operational. Three to four months prior to this evaluation smelter personnel made their most recent breathing zone and work area measurements. The results of these measurements were not requested for inclusion in this evaluation.

Noise Level Measurements

A sound level survey was made of the operations associated with the SB furnace. The results of this survey are shown in Table 22. As can be seen from these data, no serious noise sources were discovered.

Table 22. Results of Noise Measurements Made In Association With SB Furnace Operations

Location Number	Description of Measurment Location and/or Operation	Noise Type[1] S/I	Exposure[2] CI	Sound Level[3] dBA	Sound Level[3] dBC
1*	2 meters from burner end of afterburners	S	I	78-80	88-90
2*	2.5 meters from side of afterburner	S	I	81-83	91-94
3*	Slag tapping location, afterburner side of furnace, metal tapping end of furnace	S	I	81-82	87-88
4*	Near finished metal ladles	S	I	75	84-85
5*	Slag tapping location, control room side of furnace	S	I	74-75	84-86
6*	1 meter from afterburner end of furnace	S	I	77-78	89-90
7*	Process control room	S	I	55-57	69-71
8	Charging level, right side of charging hood	S	I	79-81	84-87
10	Charging level, near combustion air fan for afterburner	S	I	92-94	94-96
11	Inside cab of charge preparation front-end loader	S	C	80-88	88-98

[1]Noise Type: S = steady; I = impulse or impact.
[2]Exposure: C = continuous; I = intermittent.
[3]Sound Level: Measured in decibels on the A and C weighting networks of a type S2A sound level meter.
*Refer to Figure 52 for location of sound level measurement.

CONTROL CRITIQUE

The engineering and work practice controls of employee exposure at this smelter are exemplary. The effectiveness of this system of controls is evidenced by the control of employee exposures to lead in all work activities associated with the SB furnace to approximately 100 ug/m^3 or less.

In general, the local exhaust ventilation systems provided for the SB furnace are well designed and maintained. They provide good enclosure of emission sources, vigorous hood face and duct transport velocities, access openings and mobility to allow efficient performance of routine work. The employees were observed to effectively utilize local exhaust ventilation controls to minimize their exposure to emissions from the process. The isolation of charge materials handling, charge preparation, and furnace charging from other SB furnace work areas provides obvious benefits in confining contamination generated by these operations to the Charge Storage and Preparation Building. The low lead-in-air concentrations found in this building must be at least in part attributable to the handling of agglomerated flue dust rather than bulk quantities of untreated flue dust.

Yard sprinkling and washdown precedures appear to minimize entrainment of dust into the air, tracking of muddy materials into other work areas, and splashing of mud on employee clothing and plant equipment.

Washdown procedures employed in the SB furnace operating area did maintain floors in dust-free and clean conditions. Washdown operations were timed so that slag was tapped into ladles and then floors were washed. By the time slag was to be tapped again, the floor covered by metal plates at the slag tapping station was essentially dry. According to operating personnel, the presence of wetted floors near molten metal and slag handling has not resulted in increased hazard when molten metal or slag spills have occurred.

A few situations were discovered which could be improved. They are:

- The SB furnace process control room was found to be contaminated with lead (38 - 54 ug/m^3). Since employees are permitted to smoke and consume beverages in this area, it is recommended that improved ventilation and housekeeping is provided to reduce lead contamination. It is unknown to what extent the contamination of this control room, together with smoking and beverage consumption and other hygiene practices, contribute to employee lead absorption as evidenced by reported blood lead levels.

- Ventilation of the control room could be engineered to bring in outside air through filters and maintain the control at a slight positive pressure with regard to the SB furnace operating floor. In any future installations of this type, consideration should be given to enlarging the control room and arranging control panels so that the base of the SB furnace could be viewed through windows in the control room wall. This would reduce traffic in and out of the control room when simple observations or hand signals to employees are required.

- The insertion of metal handles into molten finished metal at the finished metal ladle cooling station currently creates some uncontrolled exposure to the employee performing this operation. Exposure occurs when the employee must lean over the ladle to insert the handles and hold them until frozen in place. Possibly a set of tongs or other such tool could be used to reach over the ladle and insert the handles preventing the employee from being directly exposed.

- Limitations of the study did not permit careful evaluation of the effectiveness of the air filtration system provided for in the cab of one front-end loader. If this filtration system is indeed effective, its installation on all similar yard equipment used at this smelter should be considered.

- The local exhaust hoods provided for the slag ladles at the agglomeration furnaces could be made more effective by reducing the gap between the ladle and hood and also reducing the velocity of cross drafts caused by wind. It is suggested that a concrete pad or other substantial stand be provided to elevate ladles closer to the hoods. The bottom of the hood could be fitted with hanging chains to help break up cross draft air movement.

OTHER PROCESSES AND CONTROLS

In addition to the SB furnace and associated equipment, a variety of other smelting processes are operated at the Paul Bergsoe and Sons A/S Glostrup, Denmark, facilities. Two of these processes, rotary furnace smelting and pot induction furnace smelting, were evaluated during this study. Each of these processes received relatively less attention than the SB furnace. The primary aim of the evaluations of these processes was to describe control equipment which may be readily adaptable to similar processes in the United States.

ROTARY FURNACE SMELTING

Description of Equipment and Controls

Rotary furnace smelting operations are conducted in separate facilities. Figure 74 shows a large building which is divided into two major sections. One part of the building is devoted to furnace operations while the other part contains charge storage and preparation functions.

Receipt of Raw Materials--
A variety of raw materials (slags, drosses, etc.) are received for smelting in the rotary furnaces. These materials are unloaded from trucks and stored in the segregated bins in the Charge Storage and Preparation Building shown in Figure 55 and 74. The yard unloading area is sprinkled and washed down in similar fashion to that described for the SB furnace facilities. Materials are handled by a variety of front-end loaders.

Charge Storage and Preparation--
The Charge Storage and Preparation Building associated with the rotary furnaces (refer to Figure 74) is a concrete structure provided with a large roll-up, materials delivery door, twelve bins for segregating raw materials, and another roll-up door which communicates with the rotary furnace operating area. This building is equipped with an automatic sprinkling system which periodically wets floors and dampens piles of raw materials. Several bins containing bagged, relatively non-toxic materials are not sprinkled. No mechanical ventilation is provided for this building.

Rotary Furnace Charging Equipment--
Charge materials for the rotary furnace are placed in specially designed charge containers which rest on a low platform behind the roll-up door between the furnace operating and charge preparation section of the building. Figure 74 shows the location of this charge container resting platform. Figure 75 shows a close-up of the charge resting platform and a detail of an individual charge container.

Each rotary furnace is equipped with a round charging door in the center of the front end of the furnace (refer to Figure 74). The lift truck picks up the charge container from one end, inserts it into the furnace, and then rotates the container to dump the charge material. Rotation is accomplished through use of a rotating lift head on the lift truck.

After dumping, each container is rotated back to its upright orientation, removed from the furnace and replaced on the charge container resting deck. When all containers have been emptied into the furnace, the roll-up door at the resting deck is closed.

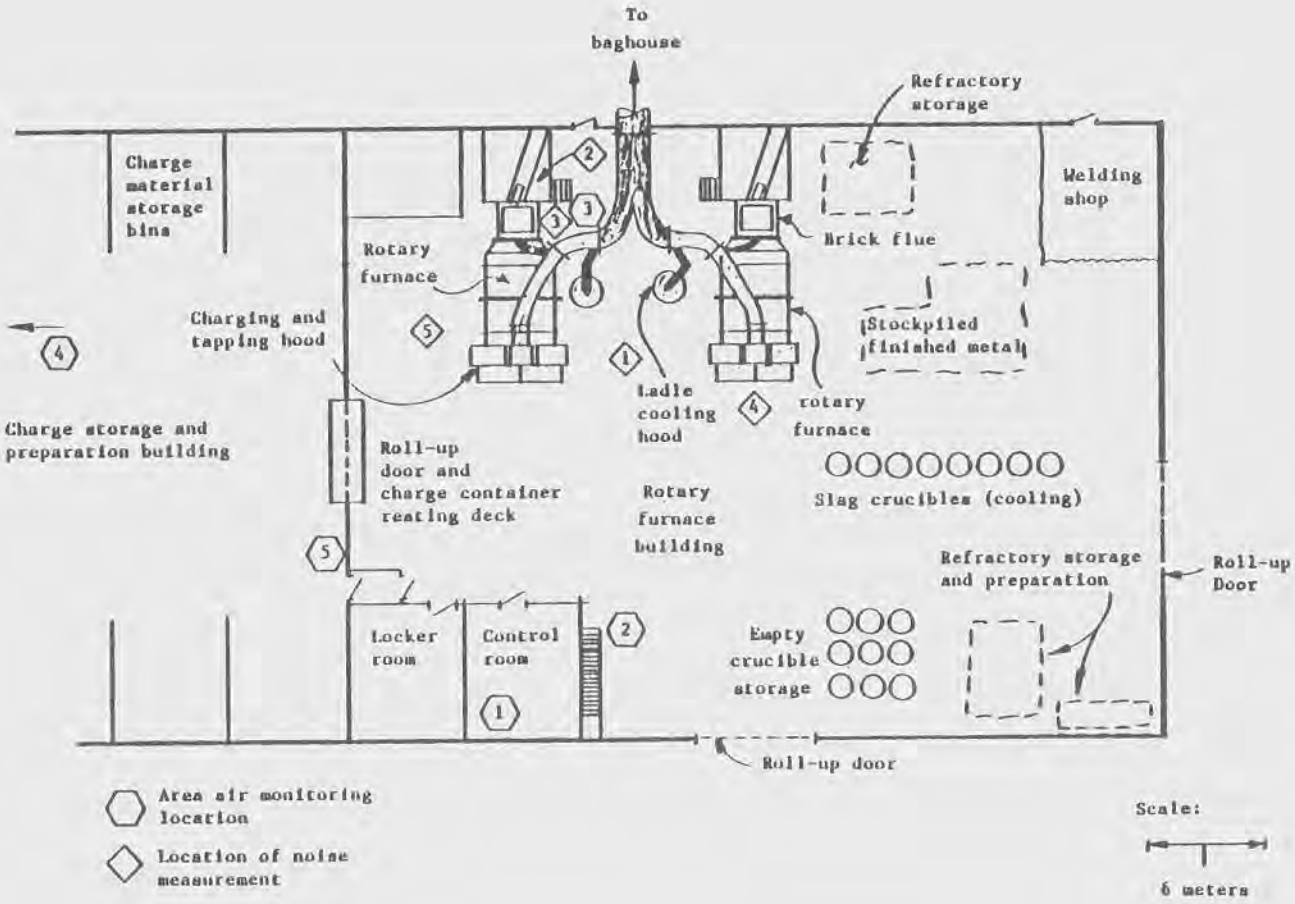

Figure 74. Rotary furnace smelting and charge storage preparation building.

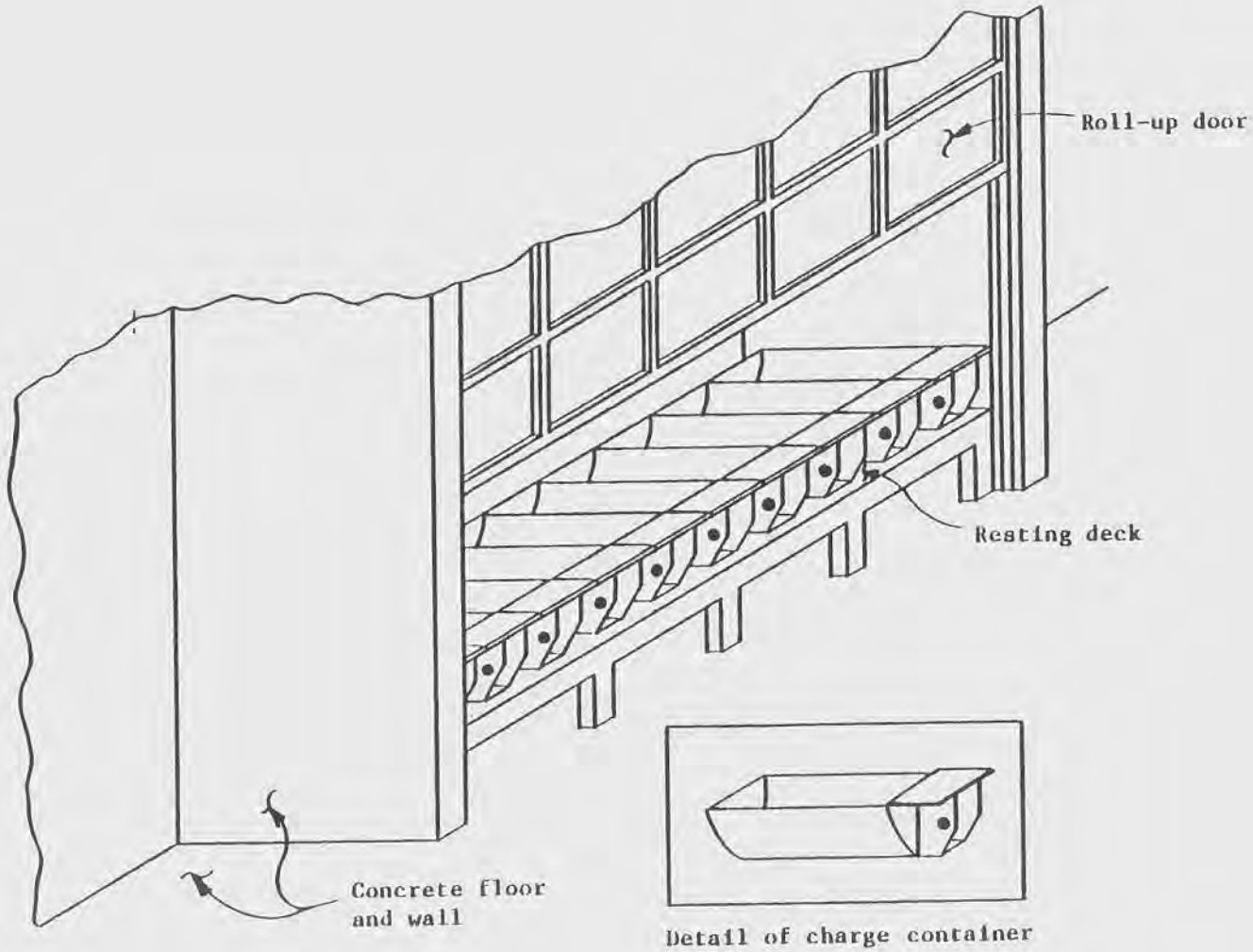

Figure 75. Close-up of charge container resting deck, roll-up door, and detail of charge container.

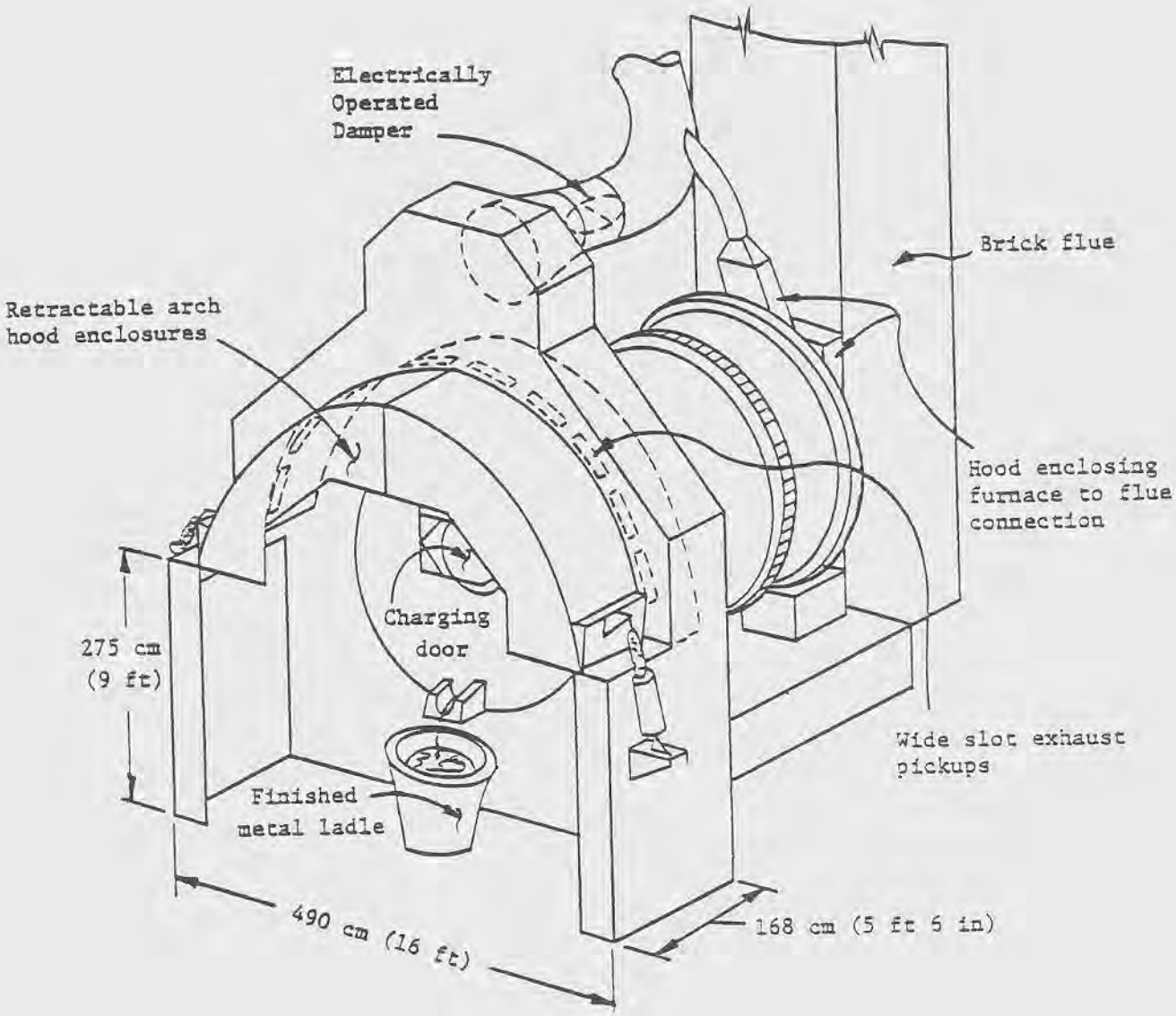

Figure 76. Rotary furnace charging and tapping controls.

An exhaust hood is provided at the front of the furnace to capture emissions from the furnace during charging. A sketch of this hood is shown in Figure 76. Exhaust draft to this hood is controlled by a damper located directly behind the hood.

Rotary Furnace Operating Controls--
The two rotary furnaces studied are tangentially fired from the rear. Hot combustion gases enter the furnace body, circulate to the front of the furnace, and then are exhausted through the brick flue (refer to Figures 74 and 76). The furnaces are of steel shell construction with refractory lining. They rotate 360° and the rotation can be reversed.

Figure 76 shows the exhaust ventilation controls for the rotary furnaces. Hot flue gases are exhausted through the brick flue. The gap between the furnace body and the brick flue is enclosed and exhaust ventilated. An arched hood is provided over the charging/tapping end of the furnace. Exhaust draft to this hood is controlled by an electrically operated damper. The damper is opened during charging and tapping. The two furnaces are operated on staggered 10-hour cycles which allow the exhaust draft to be directed from one furnace to the other during alternating charging and tapping operations. The retractable portions of the arched hood open to allow an overhead crane to pick up filled ladles and replace empty ladles.

Each furnace is provided with a ladle cooling hood. After tapping, ladles filled with finished metal are set beside the furnace at a location where a ladle can be swung over them to capture emissions during cooling. (Refer to Figures 74 and 76.)

No mechanical dilution or makeup air ventilation is supplied to the rotary furnace operating area. Natural ventilation is facilitated by openings in the roof and along each of the side walls of the building. Air also enters through the large roll-up doors which are frequently open.

Air drawn into the rotary furnace local exhaust ventilation hoods and into the hot gas flue is combined and passed through a baghouse before being released to the ambient environment. Flue dust is collected in fabric cubical containers and reycled to the rotary furnaces. At the time this evaluation was performed, flue dust from the rotary furnaces was not being agglomerated.

The floors of the rotary furnace operating area are routinely flushed with water. The water drains into central sumps which are periodically cleaned to remove sludge or mud.

Employees do not routinely wear respirators while working in the rotary furnace operating area. Respirators are worn in the rotary furnace Charge Storage and Preparation Building, when

handling flue dust, and when working with storage piles in the yard area surrounding the rotary furnace building.

A process control room is provided in the rotary furnace operating area. This room contains process control panels and is also used as a rest area where employees are permitted to smoke and consume beverages.

Description of Emission Sources and Potential Exposures

Materials Handling Emissions--
In this portion of the smelter there are several situations where employees can be exposed to contaminants emitted by materials handling. The following paragraphs describe these situations, the employee interaction with the emission source, and the control of the source.

Raw Materials Handling--Off-loading and handling of raw materials can involve generation of airborne contamination. In this portion of the smelter, flue dust is handled in unagglomerated form which creates significant exposure. A number of yard or general labor personnel handle materials at this smelter. The smelting site is crowded with many piles of stored material lining traffic-ways. As necessary employees bring material into the rotary furnace Charge Storage and Preparation Building. These employees frequently wear respiratory protection especially when handling dusty materials. Generation of dust in this building is suppressed by the sprinkling and washdown controls described earlier.

Since the rotary furnaces are operated on a batch rather than continuous production schedule, charge preparation and handling is not a full-time activity. Filling of charge containers can be accomplished in several minutes using a front-end loader. During this operation, employees are instructed to wear respirators. Aside from delivery of charge materials and charge container filling, no other activities are conducted in this portion of the building. Therefore, total employee exposure time in this area is only a few hours each day.

Slag Handling--When slag is tapped into ladles from the rotary furnaces, the ladles remain briefly under the arched exhaust hoods. They are then moved by lift truck to the indoor slag cooling area shown in Figure 74. Any fume or smoke emitted from these slag ladles escapes into the work environment. No local exhaust ventilation is provided for the cooling slag ladles. Employees do not wear respirators during slag handling. After the slag has solidified, portions of it may be removed from the ladles at the cooling area or the ladles may be taken outside and dumped. A large front-end loader is used to handle dumped slag. Wetted floors and yard surfaces are the only controls which

assist in suppressing potential particulate emissions from solidified slag handling.

Finished Metal Handling--When finished metal ladles are filled from the rotary furnaces, they are moved from under the arched hood to cooling stations between the furnaces. Local exhaust hoods are then swung over the ladles to capture emissions during cooling. Emissions from the ladles during transfer to the cooling station are uncontrolled. Employees do not wear respirators when handling finished metal ladles.

Flue Dust Handling--Exposure to flue dusts collected from rotary furnace operations occurs during baghouse maintenance, flue dust container (fabric cubicle) replacement and handling, and charge preparation. Aside from wetted and washed-down working surfaces, respirators are the primary means to control employee exposure to flue dust.

Residues from Drains and Sumps--The paved yard surfaces and floors inside operating and materials handling areas are sloped to drains and sumps. These water collection points are routinely cleaned to remove deposits of mud. Given the wetted nature of the material, dust generation is not an immediate hazard. Splashes of particulate laden water, if allowed to dry on work clothing, tools, or work surfaces, could become a source of air-borne contamination.

Residues from Furnaces, Flues, and Ductwork--During furnace shutdown the rotary furnace and flue refractory are inspected, repaired, and/or replaced. These operations create opportunities for employee exposure. Employees do wear respirators during maintenance operations.

Charging Emissions--Rotary furnace charging is performed by one furnaceman operating a lift truck. Rotation of the furnace is stopped, the draft to the arched exhaust hood is activated, the front access charging door of the furnace is opened, the roll-up door at the charge container resting deck is raised, and charge containers are emptied one by one into the furnace.

Emissions from the charging operation emanate from the furnace charging door and rise into the arched hood. If the charge container is not completely righted before being withdrawn from the furnace, buoyant fumes and smoke can be trapped under the inverted container and released when the container is righted. If the container is righted outside the influence of the arched hood, these emissions escape into the workplace.

Only the furnaceman who operates the lift truck is directly involved with furnace charging. He is not directly exposed to charging contamination which emanates from the charging door. He can be exposed to fugitive emissions which escape the arched

hoods or which are entrained by the charge containers as they are withdrawn from the furnace. Charging requires less than 30 minutes to complete and may involve 10 to 15 tons of material. The furnaceman performing this operation does not wear a respirator.

Slag and Metal Tapping--
When the furnace is ready to tap, its rotation is stopped, the draft to the arched hood is activated and a rolling work platform is positioned under the arched hood. The furnace rotation is stopped at a point where one of the three tap holes is positioned above the fill level in the furnace but within easy reach of a furnaceman when standing on the rolling work platform. A sledge hammer is used to loosen a metal rod with a flat head which is lodged in the center of the taphole refractory plug. This rod is removed when loosened. The furnaceman who performs the tapping operation then wears a faceshield while using a pneumatic hammer and bit to clean out the refractory material from the taphole. This tapping operation takes several minutes during which time the furnaceman is close to the end of the furnace where he is exposed to radiant heat, noise from the pneumatic hammer, and potentially to emissions from the tap hole refractory and furnace interior which escape from the taphole. A respirator is not worn during this operation.

Once the taphole has been opened the rolling work platform is moved away and a slag ladle is positioned under the arched hood using a lift truck. From a position outside and adjacent to the process control room, a furnaceman operates the controls which govern furnace rotation. A second furnaceman stands a few meters from the slag ladle to observe the filling of the ladle. The furnace is rotated and slag is poured. When the ladle is nearly full, the furnace is rotated to stop the flow of slag. A lift truck removes the filled slag ladle from under the arched hood and deposits it at the slag ladle cooling area shown in Figure 74. An empty slag ladle is then moved into position.

Emissions from the tap hole rise into the arched hood. Emissions from cooling slag ladles escape into the work environment. Employees do not wear respirators during this operation.

Finished metal is tapped after slag. The same taphole is used for both metal and slag tapping. An overhead crane is utilized to move finished metal ladles. The overhead crane is operated by a pendant control. The movable sections of the arched hood are retracted to allow the cables from the overhead crane to pass and close positioning of the ladle. When a ladle is filled it is manually skimmed using a long handled, hoe-like instrument. The crane is then used to move the filled ladle to its cooling station where a local exhaust ventilation hood is provided.

Emissions during metal pouring rise into the arched hood. Emissions from the ladle during its transfer to the cooling station

escape into the workplace. Employees do not wear respiratory protection when pouring and handling finished molten metal.

Once the finished metal has frozen in the ladle, the crane is used to remove the metal ingot and transfer it to the stockpile area shown in Figure 74.

The furnace taphole is closed using refractory mud/clay and the central metal rod.

Engineering Control Evaluation

The engineering controls of employee exposure to lead and antimony associated with rotary furnace operation were evaluated using three sources of information. They are: engineering measurements and design considerations; observations; and air sampling information. These information sources will be discussed where applicable in conjunction with the control evaluated.

Charge Materials Receiving, Storage and Preparation--
Engineering Measurements--The engineering controls of interest are: the use of sprinklers to suppress dust levels in yard areas and inside the Charge Storage and Preparation Building and the separation of these activities from rotary furnace operations. These controls were evaluated through observation and air sampling.

Observations--The floors of the Charge Storage and Preparation Building were observed to remain wet. Storage piles in bins were moistened. Movement of the front-end loaders within this building does not create visible generation of airborne dust. The roll-up doors to the Charge Storage and Preparation Building were opened and closed as necessary to allow flow of materials.

Air Sampling--To obtain some limited information concerning the effectiveness of charge materials storage and handling controls, air samples were collected at two inside locations near the roll-up doors to the Charge Storage and Preparation Building. The results of this air sampling are shown in Table 23. Lead-in-air concentrations of 120 and 220 ug/m^3, and antimony-in-air concentrations of less than 17 ug/m^3 and 15 ug/m^3 were measured. These values are not high considering the fact that flue dust is handled in this area.

Rotary Furnace Exhaust Ventilation Controls--
Engineering Measurement--The exhaust ventilation system is schematically depicted in Figure 77. Evaluation of this system involved measurement of air flows at several strategic points in the system. As with all ventilation systems of this general type, it was not feasible to make measurements at every point of interest in the system. Physical access was the primary restraint in this regard.

Table 23. Lead and Antimony-In-Air Concentrations Associated With Rotary Furnace Operations*

Job/Location**	Sampling Interval	Lead-In-Air Concentration ug/m	Antimony-In-Air Concentration ug/m
Breathing Zone - Samples			
Furnaceman (HL)	6:06a - 11:11a	290	<24
Furnaceman (HL)	11:11a - 1:45p	180	<47
Furnaceman (EJ)	6:04a - 11:15a	180	<16
Furnaceman (EJ)	11:15a - 1:45p	180	<47
Furnaceman (SJ)	6:04a - 11:10a	170	33
Furnaceman (SJ)	11:10a - 1:45p	130	<36
Yardman (NN)	6:06a - 1:48p	200	<14
Area Samples - Rotary Furnace Operating Area			
Rotary Furnace Control Room (1)	6:07a - 2:05p	42	16
Outside Control Near Center of Furnace Area (2)	6:10a - 11:12a	86	<23
	11:12a - 1:56p	59	<46
Between Rotary Furnace, Near Firing End of Left Furnace (3)	6:02a - 11:14a	97	17
	11:14a - 1:56p	32	42
Area Samples - Charge Storage and Preparation Building			
Charge Preparation Building Near Door to Yard (4)	6:20a - 2:00p	120	17
Charge Preparation Building Near Door to Furnace Area (5)	6:16a - 2:00p	220	15

*Samples were collected on cellulose acetate membrane filters with 0.8u pore size and analyzed atomic absorption spectrophotometry (P&CAM 173).

**Refer to Figure 74 for location of area sampling stations.

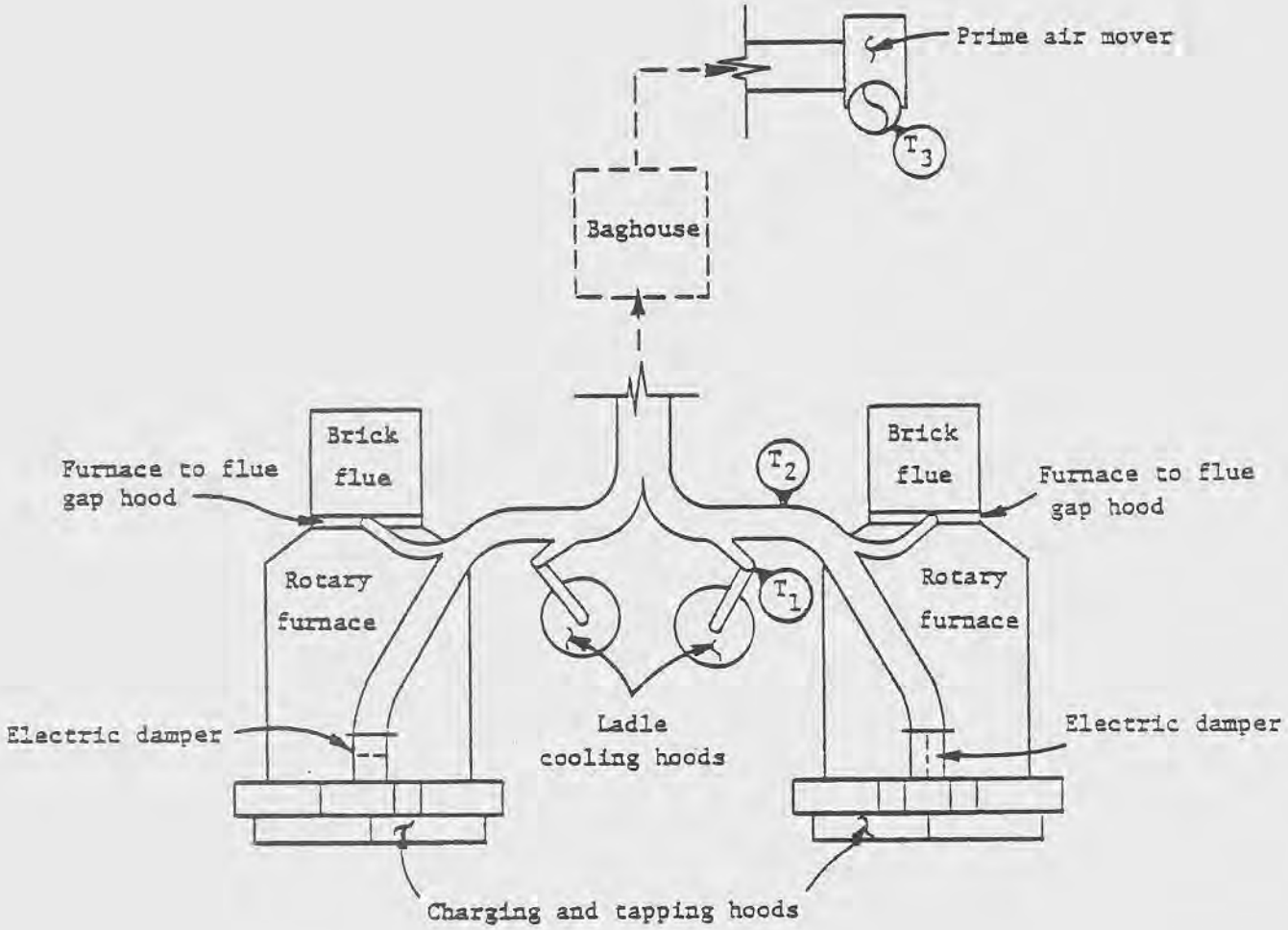

Figure 77. Overview of rotary furnace ventilation controls and key to ventilation system test points.

Figure 77 shows the points at which ventilation measurements were made. Where appropriate, hood entry coefficients were estimated and are presented in Table 24. Performance data concerning the arched hood and ladle cooling hood are presented in succeeding sections.

Table 24. Results of Tests in Rotary Furnace Ventilation System*

	Hood Entry Coefficient Ce**
T_1	0.58
T_2	
T_3	

*Air flow measurements were made using a pitot tube and inclined manometer; in-duct velocities, flow rates, temperature, and pressure data were considered proprietary and are not reported.

**$CC = \sqrt{VP/SP_h}$, where SP_h = hood static pressure.

Observations--The rotary furnace exhaust ventilation system was found to be in good repair. No serious dents or malformations in ductwork were found. The system is constructed of heavy gauge steel.

During the day this system was evaluated, problems were encountered with the baghouse bag cleaning mechanism. A portion of the baghouse jammed in the cleaning cycle mode which resulted in significantly reduced draft to the furnaces while repairs were made. Emissions were observed to escape from the arched hoods during this period. These emissions visibly contaminated the rotary furnace operating area for over an hour.

The day prior to process evaluation, the electric damper behind the arched hood on one of the rotary furnaces broke down and required repair. During the repair period significant quantities of air contamination escaped into the workplace. Also during this workday a major spill of finished metal occurred when the receiving ladle was accidentally overfilled. The metal spilled out onto a wetted floor which caused generation of copious quantities of steam but no serious splashes or projection of hot metal occurred.

Handling of flue dust in fabric cubical containers appeared to involve significant exposure to flue dust. Connection of the collectiong containers to the hoppers of the baghouse was not dust tight.

Air Sampling--The rotary furnace exhaust ventilation system works as a unit to control airborne contamination within the rotary furnace operating area. This system is supplemented by floor wetting and washdown and other work practices. Furnacemen spend varying amounts of time near specific emission sources in routine performance of their duties. For these reasons, the results of air sampling performed during this evaluation (breathing zone and work area) are more indicative of total system performance and work practices than performance of individual hoods, etc.

On the day evaluated the furnaces were charged with materials containing primarily lead and antimony. Air samples collected in employee breathing zones and at specific locations in the workplace were analyzed for lead and antimony. Table 23 presents the results of air sampling.

Two air samples were gathered from each employee's breathing zone and at each location in the rotary furnace operating area. The baghouse malfunction occurred during the 6:00 a.m. to 11:00 a.m. work period. Measured air contamination was generally more significant during this period.

As can be seen from the data, employee exposures to lead-in-air were found to range from 130 to 290 ug/m^3 on the day evaluated. Only one quantifiable employee exposure to antimony was measured (33 ug/m^3). Other samples contained less than the detectable limit of antimony. Work area samples showed lead-in-air concentrations ranging from 32 to 97 ug/m^3. Measurable concentrations of antimony ranged from 16 to 42 ug/m^3. Relatively higher contaminant concentrations were found in employee breathing zones as compared to work area samples. This suggests that employees are exposed to contaminant sources during the work activities. Exposure involves contaminant concentrations which are higher than the background workroom contamination.

Rotary Furnace Charging and Tapping Hood--
Engineering Measurements--Figure 76 presents a sketch of the rotary furnace charging and tapping hood. The hood consists of a stationary section and two retractable arch sections which function in conjunction with crane operation. Air is exhausted from this hood through wide slots which are distributed over the front side of the arch in the stationary portion of the hood. These slots are approximately 10 cm (4 inches) in width. An Alnor® Velometer was utilized to measure air velocities at the lowest three slots on each side of the arch. Radiant heat and physical access prevented measurements at all slot openings. Slot velocities ranging from 3.3 to 7.6 m/s (650-1,500 fpm) were measured with lowest velocities found at the bottom slots.

Physical access problems precluded measurements of air flow and static pressure in the ductwork directly behind the electrically operated damper. An air flow measurement was made at point T_2

shown in Figure 77. Air flow at this point is the sum of air entering the arched charging and tapping hood and air entering the hood enclosing the furnace to brick flue connection. It is estimated that approximately 6 m^3/s (13,000 cfm) enters through the arched charging and tapping hood.

Observations--A complete charging of each furnace was observed. Emissions which emanated from the charging door were observed to rise into the arched hood and enter the exhaust slots. A relatively small amount of contamination was observed to escape from the top front of the hood. Wisps of smoke and fume were also observed to escape from the small gap between the retractable and stationary sections of the arched hood. These emissions rose into the workplace and were diluted.

During insertion and extraction of charge containers through the furnace charging door, varying amounts of contamination were observed to escape from the arched hood. Most of the escaping contamination appeared to be entrained by the charge containers. This problem was most significant when charge containers were not completely righted before extraction from the furnace.

Several iterations of tapping both slag and metal were observed. Slag tapping requires several minutes to complete and was observed to involve between six and twelve slag ladles. Emissions from the tap hole and slag ladle were observed to rise into the arched hood and be collected. Only minor amounts of fume were observed to escape into the workplace during pouring of slag into ladles.

A crust was observed to form on the slag almost immediately. However, visible fume/smoke was observed to emanate from each slag ladle as it was moved by forklift to the cooling area. While cooling, smaller and smaller amounts of emission were observed to escape from the ladles for several minutes.

During slag tapping, one furnaceman operates the furnace rotation controls, one moves slag ladles with a lift truck, and a third observes ladle filling and signals the man controlilng furnace rotation. Aside from walking by cooling ladles of slag, these men were not observed to be directly exposed to emissions from slag tapping. While slag is poured from the furnace, these men observe from a distance of several meters.

Finished metal tapping produces seemingly larger quantities of fume. This fume emanates from the tap hole and ladles as it is filled. The arched hoods were observed to capture practically all of the metal tapping emissions when metal was poured at a less than maximum rate. When the furnace was rotated to produce very rapid pouring, a relatively small but seemingly important quantity of fume was observed to escape capture by the arched hood.

Some direct exposure of employees to fumes from molten metal was observed during the skimming of the metal and during its movement to the cooling station using the overhead crane. Both of these operations are conducted with employees working within three meters of the ladle. This proximity provides the opportunity for exposure to fumes which are being entrained by room air currents. Another similar exposure was observed when the crane hooks were removed at the ladle cooling spot and the exhaust hood was swung over the ladle.

When the retractable arches of the charging/tapping hood are raised, fumes emanating from the filled ladle of metal are not completely captured by the stationary portion of the hood. Fume emission at this time is not vigorous, but escaping fumes, etc., do contribute to background contamination.

Rotary Furnace Ladle Cooling Hood--
Engineering Measurements--Figure 78 presents a sketch of one finished metal ladle cooling hood used in the rotary furnace operating area. Hood dimensional and performance data are contained in Figure 78 and Table 24. As can be seen from the figure, this is a slotted hood which spreads the capture zone around the perimeter of the ladle.

Observations--Once the hood was positioned over a ladle of cooling metal, no emissions were observed to escape capture by the hood. Smoke generated by ventilation smoke tubes at the perimeter of the hood was observed to flow into the hood through the hanging chains.

Hood Enclosing the Furnace to Flue Connection--
No quantitative evaluation of this hood could be made. It does enclose the gap between the furnace and flue as shown in Figures 76 and 77, and no emissions were observed to escape this hood.

Other Industrial Hygiene Considerations

Personal Protective Equipment--
Similar protective clothing and equipment policies as described for SB furnace operations are followed in the rotary furnace work area.

Employee Hygiene--
Employees are instructed to shower at the conclusion of each shift and to wash before eating. Locker room, shower, and lunchroom facilities provided at this smelter are not elaborate. Employees are permitted to smoke and consume beverages in the SB furnace process control room. It was observed that employees did not wash their hands each time they used smoking materials or consumed beverages in this area.

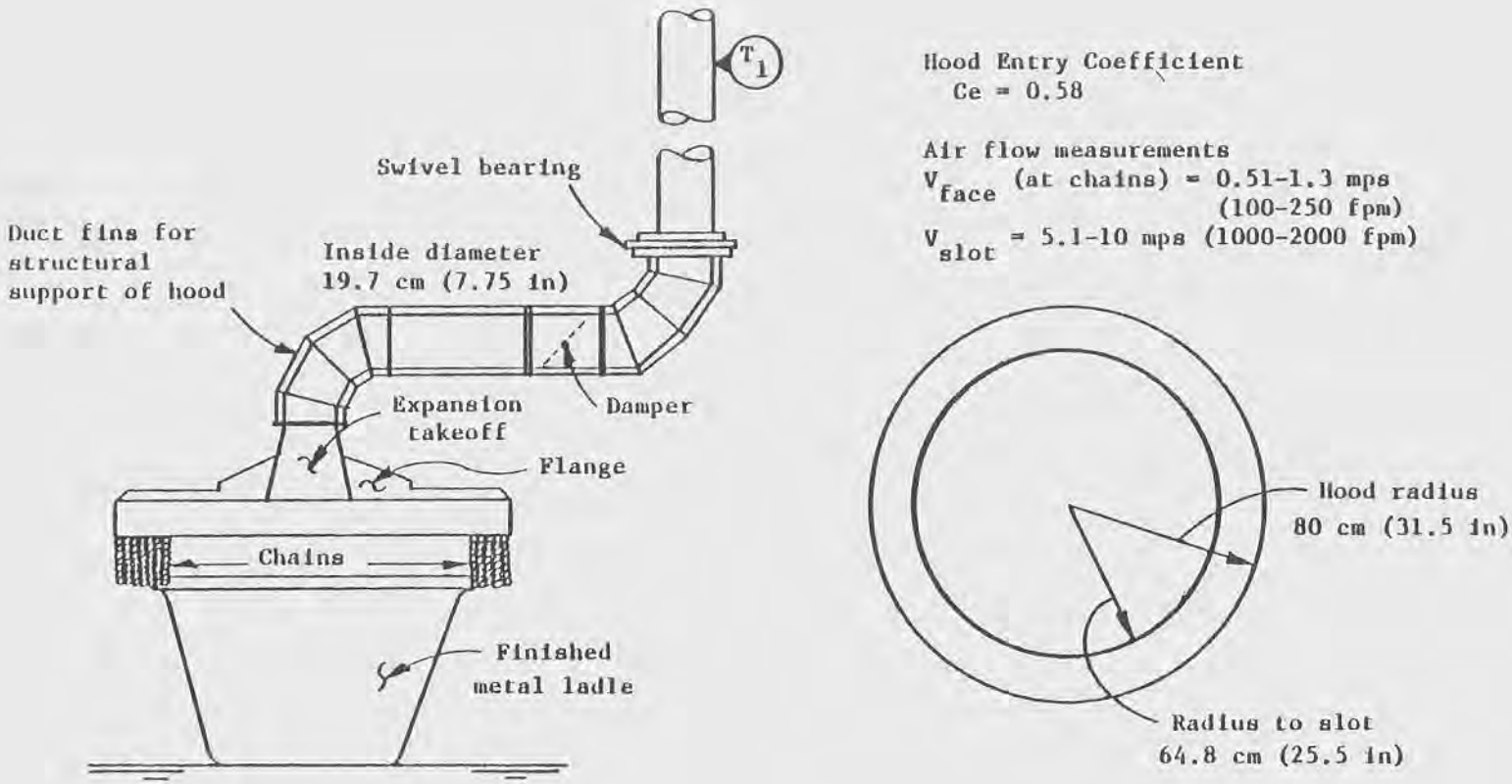

Side elevation of finished metal ladle cooling hood

Detail of slot design inside hood

Figure 78. Finished metal ladle cooling hood.

Biologic Monitoring--
No results of blood lead monitoring were obtained for employees working in the rotary furnace department. Urine specimen collection and analysis are not performed. Blood samples are obtained from operating employees each month and from other employees on a quarterly basis. The results of blood lead monitoring are reported to employees, and the employees have access to all of their blood lead analysis results. The employee is informed that his result is acceptable (less than 70 ug Pb/100 g whole blood), marginal (71-90 ug Pb/100 g whole blood), or unacceptable (90+ ug Pb/100 g whole blood). The employee is also informed whether the result shows a strong increase, increase, no change, decrease, or strong decrease in blood lead level since the last test. (Refer to the blood lead monitoring data cited on page 305.)

Noise Level Measurements--
A sound level survey was made of the operations associated with the rotary furnaces. The results of this survey are shown in Table 25. As can be seen from the data, no serious noise sources were discovered.

Control Critique

The engineering controls provided for rotary furnace operations are well designed and maintained. When functioning properly and used appropriately by employees, these controls capture the vast majority of emissions which are produced during charging, furnace operations, tapping, and finished metal cooling.

Several opportunities remain for improvement of fugitive emission control. These opportunities have been alluded to in the past and primarily involve work practices and operational changes. Emissions from cooling slag ladles could be reduced by placing covers over the ladles or relocating the cooling area out-of-doors. Emissions from metal tapping could be reduced by pouring the metal more slowly from the furnace into the ladle. Additional emission control could be accomplished by allowing the finished metal ladles to remain under the arched hoods for a longer period before moving to the final cooling station.

Housekeeping in the rotary furnace work area was good. Frequent washdown of floors appeared to significantly reduce potential entrainment of settled particulate into workplace air.

Employees should be instructed to wear respirators during and following periods of process upset, failure of ventilation controls, or during spills, etc.

Table 25. Results of Noise Measurements Made In Association With Rotary Furnace Operations

Location Number*	Description of Measurment Location and/or Operation	Noise Type[1] S/I	Exposure[2] CI	Sound Level[3] dBA	Sound Level[3] dBC
1	Between rotary furnaces	S	I	77	84-86
2	Burner end of rotary furnace	S	I	82	89
3	Near rotary furnace combustion air fan	S	I	85-86	92-93
4	Pouring end of rotary furnace	S	I	77-78	83-84
5	Beside rotary furnace next to Charge Storage and Preparation Building	S	I	81	86

[1]Noise Type: S = steady; I = impulse or impact.
[2]Exposure: C = continuous; I = intermittent.
[3]Sound Level: Measured in decibels on the A and C weighting networks of a type S2A sound level meter.
*Refer to Figure 74 for location of sound level measurement.

POT INDUCTION FURNACE

A variety of small furnaces are used to produce relatively minor quantities of specialty alloys at this smelter. The ventilation controls associated with one, small, tilting electric induction furnace proved to be interesting and are discussed here.

Description of Equipment and Controls

The furnace studied is used to produce specialty copper based alloys. An overview of this furnace and its associated exhaust ventilation hood is shown in Figure 79.

This furnace is located in a building with several other furnaces engaged in production of various alloys. The furnace is of a tilting type which facilitates pouring of its molten contents into a transfer ladle.

The furnace is provided with a slotted hood suspended over the furnace; this hood can be moved so that emissions from the furnace in its level and tilted position can be controlled.

Description of Emission Sources and Potential Exposures

Fumes and smoke emanate from the top of the induction furnace during furnace charging, meltdown, and pouring. Due to its small size the furnace is manually charged. Containers of scrap (mostly plant scrap) are dumped into the furnace. In some instances a scoop shovel is used to handle fine materials. Ingots of known composition may also be added to bring the melt to proper specification.

During charging the furnaceman can effectively add materials to the furnace without being directly exposed to the plume of emissions emanating from the furnace. This can be accomplished by moving the hood to various positions over the furnace to allow the necessary access. Initial charging usually will require only several minutes to complete. As the material melts, additional materials may be added at varying intervals.

While the furnace charge is melting, the furnaceman tends to other operations located in the same building. This employee returns to the furnace periodically to observe how the melt is proceeding.

As the melt nears readiness for pouring, the furnaceman skims the molten metal surface and moves the transfer ladle into position to receive the molten alloy. Again the overhead slot hood can be maneuvered to prevent the employee from being directly exposed to the plume of fumes emanating from the furnace.

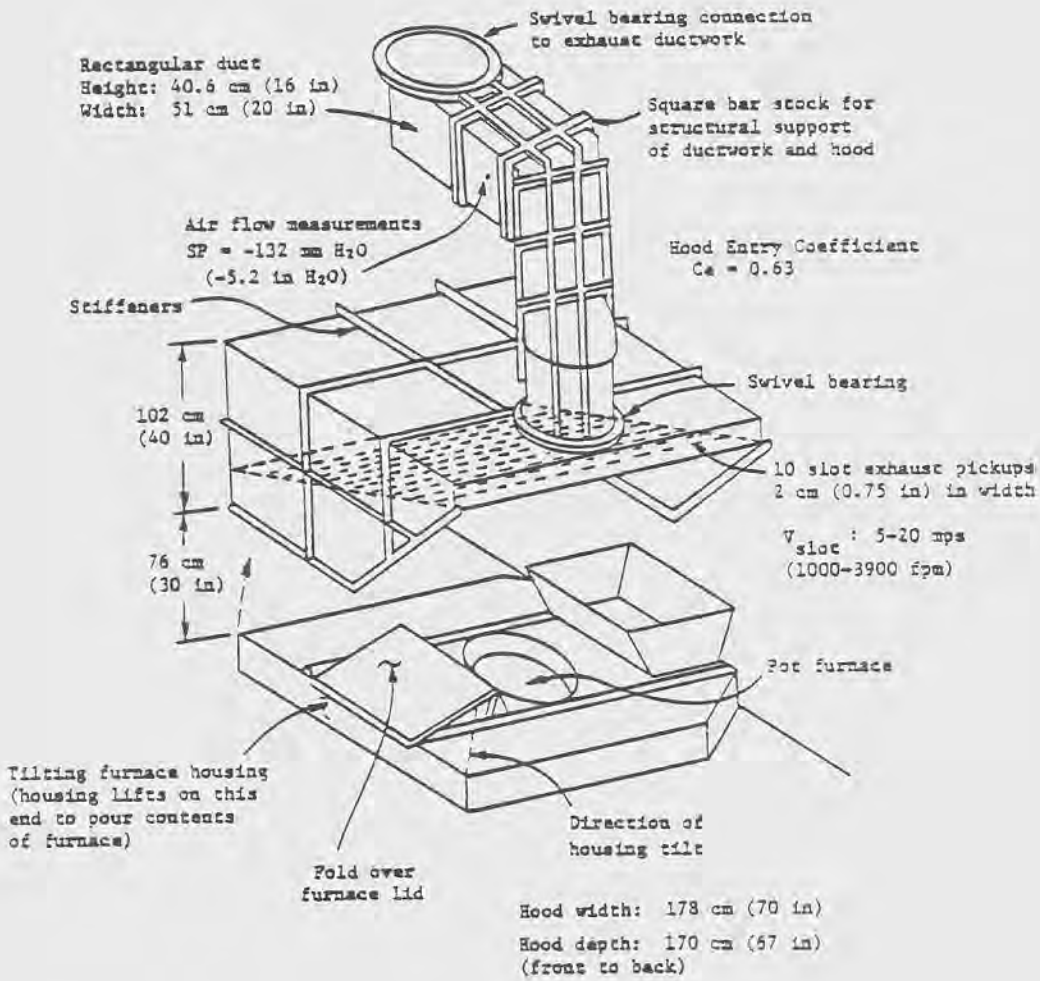

Figure 79. Pot induction furnace hood.

During pouring of the furnace, the furnace and its housing deck tilt as is indicated in Figure 79. The overhead exhaust hood is moved to allow this tilting but still remain in position to capture emissions. Once the molten metal is poured into the transfer ladle, the ladle is moved out from under the hood. No control is provided for emissions from the ladle until it reaches its pouring station. The employee who tends this furnace is exposed to fugitive emissions from this furnace operation and to fugitive contaminants from other equipment in the same general work area.

Engineering Control Evaluation

Engineering Measurements--
The pot induction furnace hood was evaluated by measuring slot velocity inside the hood and air flow in the duct leading away from the hood. Slot velocity measurements were made using an Alnor® Velometer. A pitot tube and manometer were used to make air flow measurements at the point indicated in Figure 79.

As indicated by the results of the measurements, a large volume of air is moved through this hood resulting in relatively high slot velocities.

Observations--
When positioned over the pot furnace, the hood appeared to very effectively capture all visible contamination.

During charging, skimming, and pouring, the furnaceman did not always take full advantage of the mobility of the hood to help preclude his contact with emissions. Better hood positioning could have been possible during the period observed.

Ventilation smoke tubes were used to observe air flow at all sides of the hood. Smoke was observed to be swiftly pulled into the hood.

Air Sampling--
Due to the presence of multiple emission sources in the same general work area, air samples were not gathered in the evaluation of this hood.

Control Critique

The hood appeared to function well when properly utilized by the furnaceman. Emissions from the transfer ladle as it is moved to casting lines could be lessened by placing a lid over the ladle. This would also help to reduce the possibility for splashes of molten metal to occur.

IN-DEPTH SURVEY V

SMELTER 2920

(Secondary Zinc Smelter)

INTRODUCTION

This in-depth survey of a zinc alloying smelter was prepared for the National Institute of Occupational Safety and Health by Radian Corporation. The objectives of this in-depth study are as follows:

1. To describe the processes and operations of interest with an occupational health engineering discussion of the hazards and potential exposures associated with these processes.

2. To describe and evaluate the engineering controls used to minimize worker exposure to the hazards and potential exposures identified.

Smelter 2920 is primarily a zinc alloyer which also recycles lead type and produces smaller quantities of solder and lead alloys. The processes studied at this smelter were the zinc alloying kettles and the lead alloying kettle. The major controls of interest are hoods over the lead/tin and zinc/aluminum alloying kettles and general ventilation for the zinc/aluminum alloy continuous casting system. These controls and their effectiveness are discussed in the following sections.

PROCESS STUDIES

LEAD/TIN ALLOYING OPERATION

Description of Equipment and Controls

The lead/tin operation is located in the southwest corner of the building and consists of one 9,090 kg (20,000 lb) kettle and three 454 kg (1,000 lb) pot furnaces. The layout of the plant is shown in Figure 80. During the period of this study, this operation was producing type metal with an approximate composition of 4 percent tin, 11.5 percent antimony, and 84.5 percent lead, by weight. The small pot furnaces are natural gas fired with no temperature control system and no flue system. The temperature is maintained at approximately 315°C (600°F) and is measured periodically by the use of pyrometers. The large kettle furnace is oil fired.

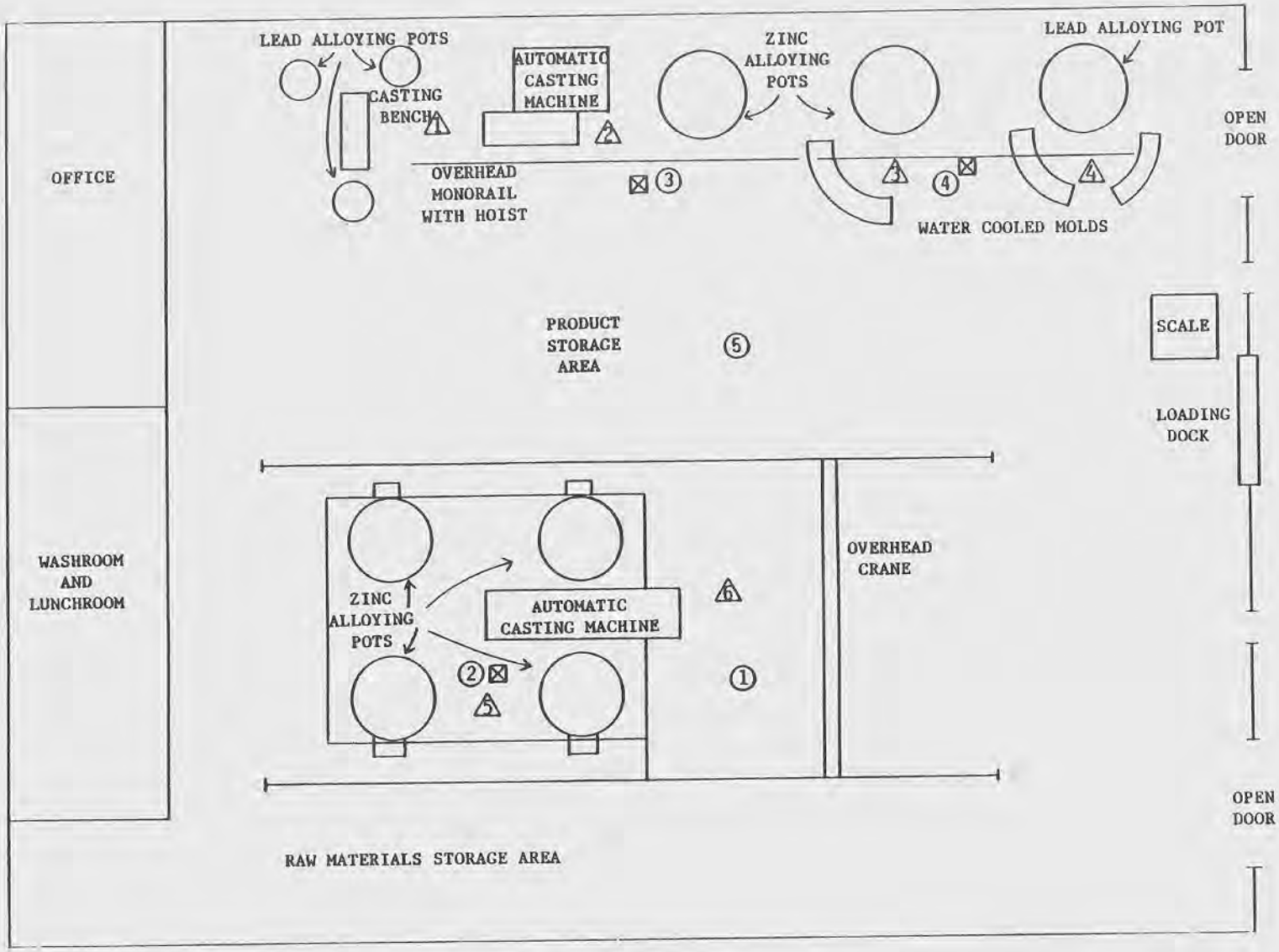

Figure 80. Layout of Smelter 2920 sampling locations and work areas.

The small pots are charged with scrap or small ingots by hand. The furnace is charged by using either a forklift to set a pallet of ingots into the furnace or an overhead monorail system with an umbilical operated hoist. The large kettle, and all other large kettles, are equipped with an automatic timing device. This allows the charging of the furnace at the end of the afternoon shift, and the furnace heats early in the morning so the charge is melted when the morning shift begins.

Pouring of the small pots is done by hand. Ladles are used to transport the molten metal from the pot to stationary mold stations which contain water-cooled molds. A variety of small ingot and solder metal shape molds are used. The large kettle is tapped into an automatic casting machine. The metal is then poured into water-cooled molds on a conveyor belt type system. The metal pouring and mold movement function of this machine is fully automatic. The finished ingots are hand stacked onto pallets and stored until delivery. A crew of two to three employees, one of whom is an ingot stacker, is assigned to the lead/tin furnace operation. The small pots are filled, melted, and emptied four times per day. The large kettle is filled and melted once every two days.

Description of Emission Sources and Potential Exposures

Potentially toxic air contaminants can be emitted from the lead/tin alloying operation during several phases of the operation. The primary hazard involved is employee exposure to metal fumes consisting of zinc oxide, lead oxide, and tin. These fumes can be released during the charging, melting, or casting operations.

The large lead/tin alloying kettles are provided with hoods as shown in Figure 81. Any air contamination which escapes is captured by the hood and is diffused into the general work environment. The contaminated air may eventually enter a local exhaust ventilation system or exit the building through roof vents or open doors. Fugitive emissions occurring during the meltdown phase of the operation would normally be substantially diluted before reaching the breathing zones of the workers. During the charging and casting phases, however, employees work in close proximity to the hood opening, and the potential for exposure is increased.

The small lead/tin alloying pots are not provided with local ventilation. The greatest potential for exposure from this source occurs during the casting operation. These pots are poured using hand-dipped ladles to fill stationary water-cooled molds. The employee works in close proximity to the three pots when pouring any of them.

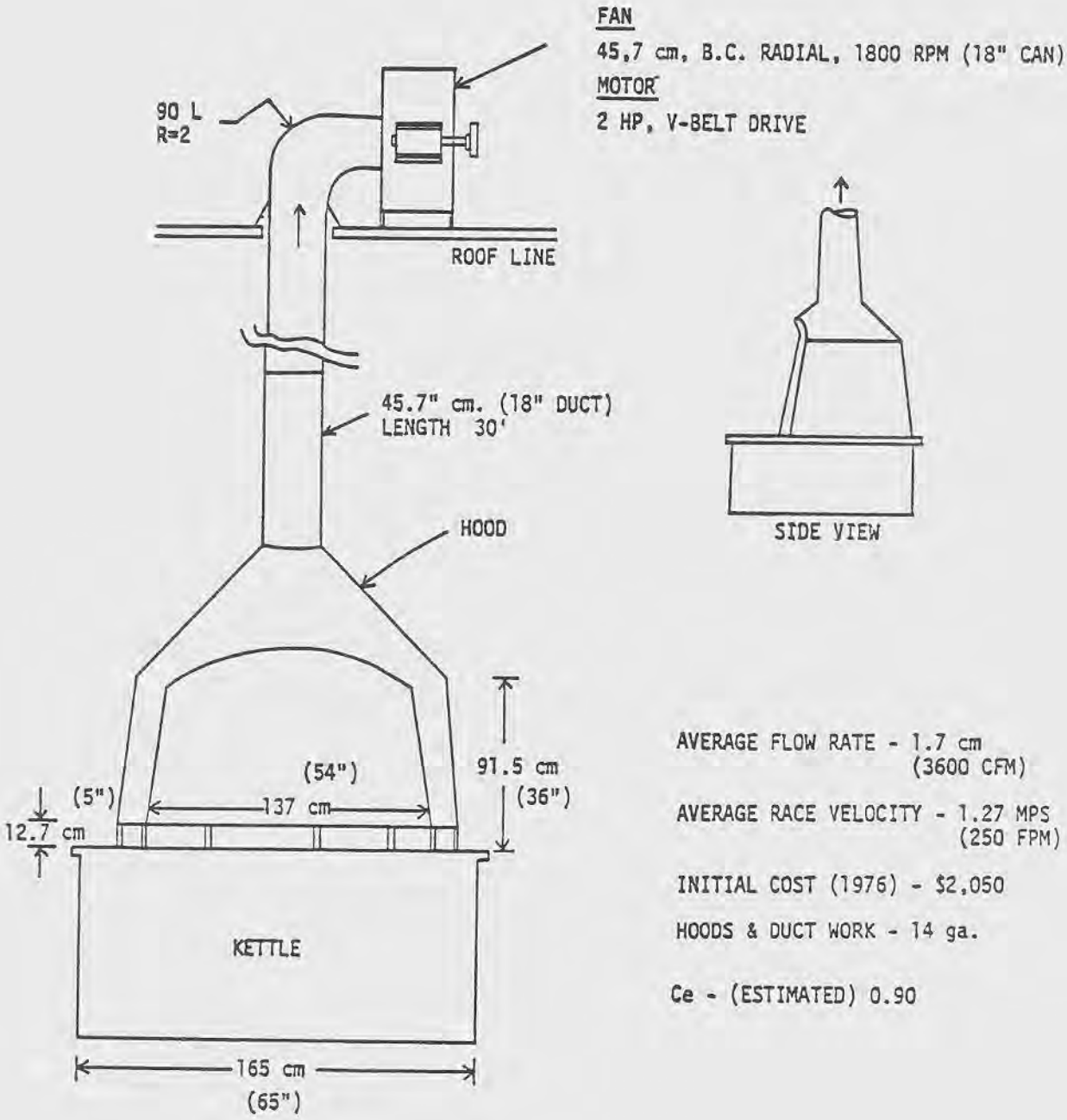

Figure 81. Kettle hoods.

Engineering Control Evaluation

Controls for the lead/tin alloying operation were evaluated using three basic types of information: engineering measurements and design considerations; observations; and air sampling.

Engineering Measurements--
Measurements were made of the average face velocity of a typical large kettle hood. These data are presented in Figure 81.

Observations--
Visual emissions over the large kettle were observed to be controlled adequately within the hood and were seen only during the charging of the kettle.

Air Sampling--
A limited amount of air sampling was performed during this evaluation to help determine whether this control system was effective in preventing excessive levels of air contamination in the lead/tin alloying furnaces work area during specific cycles of furnace operation.

Furnace crew employees were asked to wear personal sampling equipment while performing their particular job functions. Samples were taken on two consecutive working days for the same workers. The approximate location of the employee work areas is shown in Figure 80. The results of this sampling are given in Table 26.

As can be seen from the air sampling data, worker exposure to lead and zinc oxide fume was very low. The lead samples were right at the limits of detectability, and the zinc oxide levels were significantly below the 5,000 ug/m^3 standard. The results of this air sampling indicates that exposures were well below the 8-hour TWA exposure limits for both substances.

Carbon monoxide measurements were made at several locations around the furnaces and work areas. The measured carbon monoxide concentrations were all below 5 ppm. These measurements were made using NIOSH-certified detector tubes. These findings confirmed observations which indicated that only small amounts of air contamination were escaping the emission control system.

ZINC/ALUMINUM KETTLE ALLOYING OPERATION

Description of Equipment and Controls

The zinc/aluminum alloying operation consists of two 9,090 kg (20,000 lb) kettle furnaces. These furnaces are oil-fired and are provided with typical kettle hoods as shown in Figure 81. During the period of this study Zamak #3 and Zamak #5 alloys were being produced. Zamak #3 consists of 4 percent aluminum, 96

Table 26. Air Sampling Data*

Sample Number	Sampling Location**	Sample Type	Process Activity	Pb ug/m^3	ZnO ug/m^3
S01	1	BZ	Stacking Ingots	5	21
S02	7	BZ	Melting	8	45
S03	6	BZ	Casting	43	85
S04	3	BZ	Melting	7	26
S05	4	BZ	Melting	5	30
S06	2	BZ	Melting/Casting	6	70
S07	2	BZ	Melting/Casting	6	46
S08	4	BZ	Melting	8	12
S10	2	BZ	Melting/Casting	6	41
S11	6	BZ	Melting	11	10
S13	Various	BZ	Various	8	14
S15	5	A	Various	8	10
S16	1	BZ	Stacking Ingots	6	15

*Samples were collected on membrane filters with 0.8u pore size and were analyzed using atomic absorption spectrophotometry.
**Sampling locations/work areas are shown in Figure 80.
***A = Area Monitoring; BZ = Breathing Zone Sample.

percent zinc with a very small quantity of magnesium. Zamak #5 consists of 1 percent copper, 4 percent aluminum copper, and approximately 95 percent zinc. Approximately three casts per day are performed which include loading, melting, and casting of the zinc alloy. These kettles operate at approximately 455-480°C (850-900°F). Pouring of these kettles is accomplished using stationary, water-cooled ingot molds. Molten alloy is pumped from the kettle into a trough which leads to the mold line. The individual molds are filled by hand. The cooled, hardened ingots are removed from the molds and stacked onto pallets by hand. A crew of two to four employees works in this area depending upon the work load.

Description of Emission Sources and Potential Exposures

Potentially toxic air contaminants can be emitted from the zinc/aluminum alloying operation. The primary hazard involved is employee exposure to metal fumes consisting of zinc oxide and copper. These fumes can be released during the charging, melting, or casting operations.

The zinc/aluminum alloying kettles are provided with typical kettle hoods with openings for kettle access. Any air contamination which escapes from the hood enters the work environment. Employees work in these areas during charging and pouring, increasing the potential for worker exposure to hazardous fumes.

Engineering Control Evaluation

Controls for the zinc/aluminum alloying operation were evaluated using three basic types of information: engineering measurements and design considerations; observations; and air sampling information.

Engineering Measurements--
Measurements were made of the average face velocity of a typical large kettle hood. These data are presented in Figure 81.

Observations--
Visual emissions over the large kettle were observed to be controlled adequately within the hood and were seen only during the charging of the kettle. Kettle #1 was located adjacent to the northwest door. On occasion, a side draft entering the building was seen to adversely affect the capture of visible emissions from the top of the kettle. Some momentary and small amounts of visible contaminants were seen leaking from the edge of the kettle hood. It should be noted, however, that this was observed only two to three times during the study, when the wind was blowing into the building from the north.

Air Sampling--
A limited amount of air sampling was performed during the evaluation of the zinc/aluminum alloying operation. Personal monitoring was performed for the employees working around these furnaces. The approximate work area location is shown in Figure 80. The results of this sampling is given are Table 26. As the sampling results show, worker exposure to lead and zinc oxide fumes is negligible. These results indicate that the engineering controls employed in the zinc/aluminum alloying area are effective in reducing worker exposure to hazardous chemical agents.

ZINC/ALUMINUM CONTINUOUS CASTING OPERATION

Description of Equipment and Controls

The zinc/aluminum continuous casting operation consists of four 9,090 kg (20,000 lb) kettles and an automatic casting and conveying system. The layout of this sytem is shown in Figure 80. The kettles are externally oil fired and a temperature of approximately 455-480°C (850-900°F) is maintained. During the period of this study Zamak #7 alloy was being produced. Zamak #7 consists of 4 percent aluminum, 0.02 percent nickel, 0.01 percent magnesium with the balance being zinc.

The kettles are charged using an overhead crane equipped with a hoist operated by a remote control umbilical unit. Small zinc ingots weighing 27 kg (60 lb) are usually charged by pallet load. The plant also purchases large 1,000 kg (2,200 lb) zinc ingots which are typically charged four to a kettle. The aluminum is usually in the form of turnings or other new scrap. Some recycled aluminum is used, typically in the form of briquetted soft drink cans. These kettles are equipped with an automatic timing device which allows charging of the kettles at the end of the afternoon shift and provides a melted charge at the beginning of the morning shift the next day.

Pouring of the four kettles is accomplished using an automatic casting and conveying machine. The molten alloy is pumped from the kettle, through a trough, and into a holding ladle at the casting machine. This machine casts the alloy into water-cooled molds. The molds are sprayed with water in an enclosed chamber for further cooling. This chamber is equipped with an exhaust fan which blows the steam produced upward, away from the work area. Two roof exhausting fans carry the steam and fugitive emissions from the zinc kettles to the outside of the building.

The cooled ingots are conveyed to the stacking area where they are hand stacked onto pallets. These are then moved by forklift to the storage area to await shipment. A crew of two furnace tenders works in the casting area and operates the casting machine. Four employees work at the exit end of the ingot

conveyor, stacking ingots on pallets. Three men are working at any one time with one on break.

Description of Emission Sources and Potential Exposures

Potentially toxic air contaminants can be emitted from the zinc alloying operation. The primary hazard involved is employee exposure to metal fumes consisting of zinc oxide. Impact noise during stacking is also a potential problem.

Engineering Control Evaluation

The zinc/aluminum continuous casting operation was evaluated using two basic types of information: observations and air sampling.

Observations--
Observations of the zinc/aluminum kettles did not indicate any severe visible emissions. Steam being formed by the cooling of ingots was observed to rise directly to the roof exhaust fans. The roof ventilators above the casting area consisted of a 3-hp, 115 cm (48 inch) fan, rotating at 1,140 rpm, rated at 13.47 cms (28,600 cfm), costing $2,450 in 1978, and a 2-hp fan driving a fan with unknown dimensions and other parameters.

Air Sampling--
Personal monitoring was performed in the zinc/aluminum alloy continuous casting area. Personal sampling equipment was worn by employees working on the conveyor deck and employees stacking the finished ingots. The results of this coupling are shown in Table 26. Worker exposure to zinc oxide fume was very low.

Carbon monoxide measurements were also made on the conveyor deck. The results of these samples were less than 5 ppm CO. These samples were taken using NIOSH-certified detector tubes.

OTHER HAZARDS AND USE OF PERSONAL PROTECTIVE CLOTHING AND EQUIPMENT

Employees working in the furnace areas and product handling operations, and other employees who operate materials handling equipment and perform maintenace, are exposed to hazards other than metal fume and combustion gases. Among these hazards are: possible contact with molten metal; exposure to excessive heat; and exposure to noise. Due to the presence of these potential hazards, employees utilize a variety of personal protective clothing and equipment items to reduce the possibility of harmful exposure. Safe work practices are also employed to minimize risk of injury.

The potential for contact with molten metal is most significant during tapping and pouring of the furnaces. The following articles of protective clothing are worn routinely during these operations: safety helmet, safety toe shoes with metatarsal protectors, safety spectacles, face shields, gloves, and heat shield aprons. Some of these articles are removed when tasks of lesser overall hazards are performed which do not present significant potential for contact with molten metal.

Noise in the work place is caused by a variety of equipment and operations. Ingot handling and furnace firing mechanisms were responsible for most noise. Table 27 contains the results of noise measurements made at several locations in the workplace.

General Hygiene and Monitoring

This company supplies work clothing for the employees. Employees launder their own clothing. Locker room and washroom facilities are provided along with a lunchroom. Eating and smoking are prohibited in the workplace. In addition, employees are instructed to wash before eating and handling food.

Personal air samples are taken every few months to determine lead exposure. These samples are analyzed by a private laboratory. No blood lead samples are taken by the smelter.

Table 27. Sound Measurements

Location/Operation	Type*	Response**	Readings dBA	dBB	dBC	Comments
1 Not Stacking	C	S	77	82	86	
1 Pouring/Stacking	I	S	85-90	90-95	94-96	
1 Pouring/Stacking	I	F	99	102-105	100-105	
2 Not Pouring	C	S	82-84	84-86	90-91	
3 Not Pouring	C	S	86-90	90-92	88-92	Radio blaring
3 Not Pouring	C	S	76-78	80-82	85-87	Radio down
4 Not Pouring	C	S	80-84	84-86	88-90	
5 Not Pouring	C	S	80-82	81-83	86-88	

*Type: C = continuous; I = impact.
**Response: S = slow; F = Fast.

IN-DEPTH SURVEY VI

SMELTER 1300

(Secondary Lead Smelter)

INTRODUCTION

This in-depth survey of a battery breaking operation was prepared for the National Institute for Occupational Safety and Health by Radian Corporation. The purposes of this study are as follows:

1. To describe an important operation usually found in the secondary lead smelting industry where batteries are recycled;

2. To provide an occupational health engineering discussion of the hazards and potential exposures associated with this process; and

3. To describe and evaluate the controls used to minimize worker exposure to the hazards and the potential exposures identified.

Only one process associated with the secondary smelting operations was selected for study at this smelter. This was the battery breaking operation. In addition, a description of a newly built hygiene faciltiy/change house is included to indicate the type of facility required to provide compliance with the standards and to assure a minimum of employee uptake of lead through correct hygiene practices.

More than half of the lead scrap recycled in secondary lead smelters consists of used lead-acid batteries. Many secondary smelters are closely associated with, or integrated into, the SLI (starting, lighting, ignition) battery industry. Traditionally, scrap batteries were disassembled before they could be charged into the blast furnace of the secondary smelter. Until recent years, recycled batteries consisted almost exclusively of the rubber-cased battery. Rubber casings in large amounts could not be recycled through the blast furnace. Therefore, a number of ways were devised to separate the lead-bearing materials from the battery casing. These operations have come to be called "battery breaking." A number of different battery breaking operations have been devised and used over the years. These include:

- quick acting guillotine devices to cut the battery in half after which the contents are emptied from the case and the case discarded;

- grind the battery up in a mill and separate the lead-bearing materials from the case through flotation;
- crush the battery beneath the treads of a large tractor after which lead-bearing materials are separated from the case;
- cut the top of the battery off using a band saw; and
- a slow-moving guillotine shear which separates the top of the battery case from the battery after which the contents of the battery are emptied out and the case discarded (developed at Smelter 1300).

Battery breaking has traditionally been one of the most difficult of smelting operations to control. Exposure to acid mist and lead have been high.

In recent years, polypropylene cases have been replacing hard rubber cases. Polypropylene batteries can be charged to the blast furnace in larger quantities than the rubber-cased batteries. However, these batteries usually must be broken into pieces such that efficient heating and melting can occur in the blast furnace.

At Smelter 1300 rubber-cased batteries are opened, contents removed, case shredded, and stored prior to removal to a solid waste disposal site. The polypropylene plastic batteries are sent through a shredding mill and removed to a storage area prior to charging to the furnace.

This particular smelter was chosen for study because the personnel at the smelter were willing to cooperate. Also, the operation has been described as a fairly unique and successful operation in terms of minimizing employee exposures. Unfortunately, background levels of lead exposure were high and must be taken into consideration when evaluating the exposure controls associated with the battery-breaking operation.

PROCESS STUDY

BATTERY BREAKING

Description of Equipment and Controls

Process Equipment--
The process equipment studied at Smelter 1300 consists of two hydraulically operated, slow-moving, guillotine shears which remove the top of the battery so that the contents of the battery may be separated from the case. Figure 82 shows a schematic outline of the positioning of the process equipment. Figure 83 shows an outline of the hydraulic shear. Hard rubber-cased

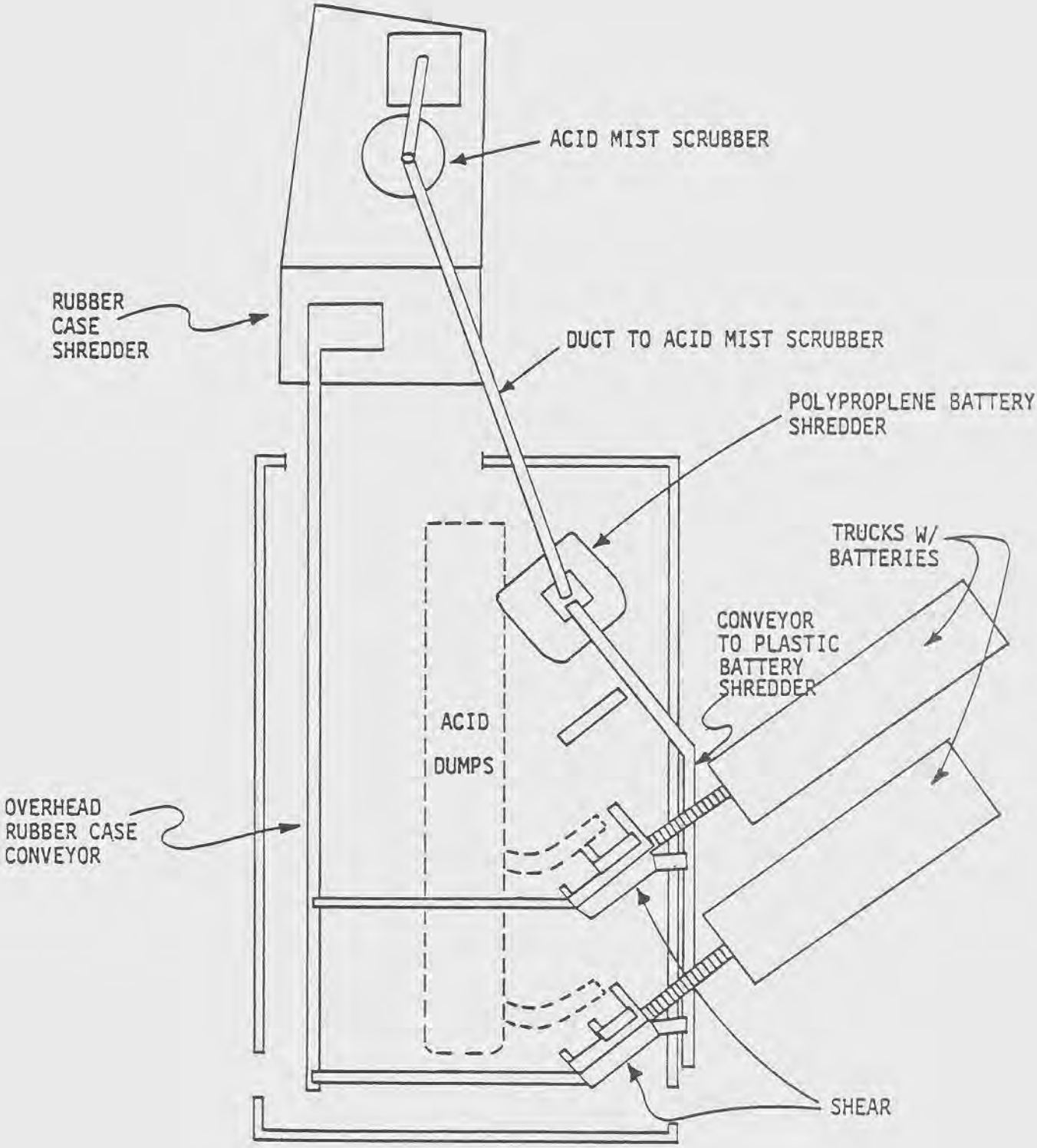

Figure 82. Schematic outline of process equipment.

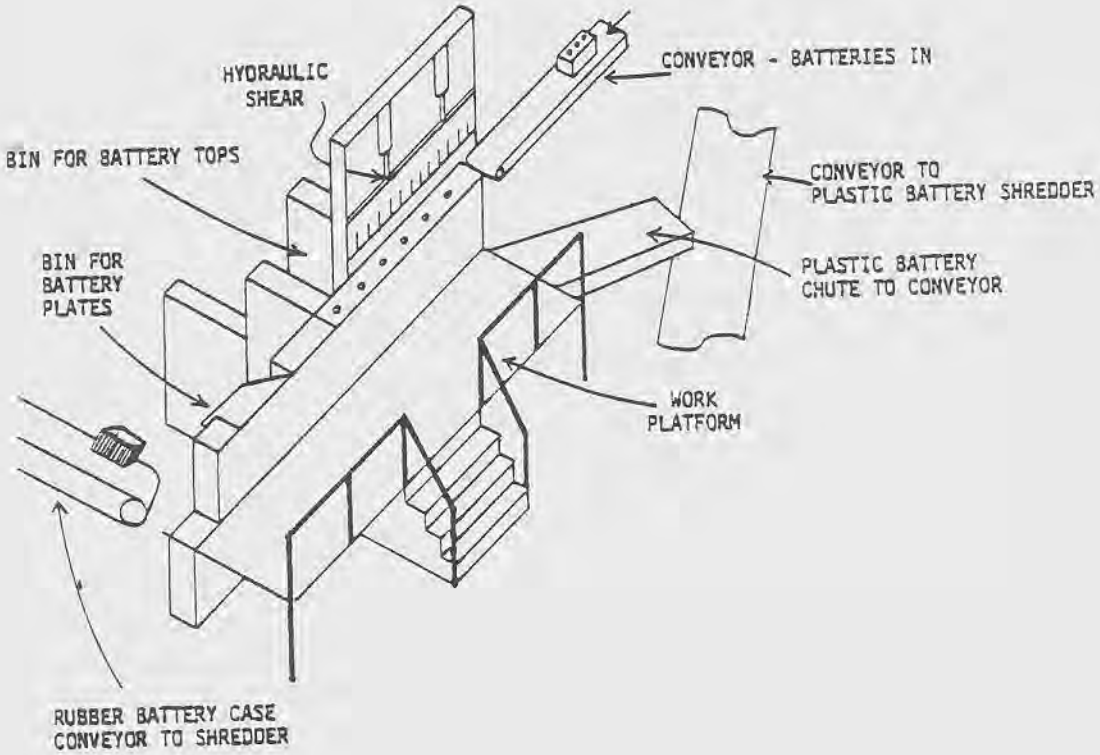

Figure 83. Battery shear.

batteries are sent through the shear. The empty rubber case is sent by conveyor to a shredder which breaks the battery into small pieces. The polypropylene plastic batteries are sent by conveyor to a shear where the battery is shredded prior to removal to the storage area. The entire scrap material associated with the polypropylene battery is eventually introduced to the blast furnace.

Only the top of the hard rubber-cased battery and its contents find their way to the blast furnace. The hard rubber casing is eventually removed to a sanitary landfill.

Battery acid is collected in an acid sump where the acid is allowed to stand such that solids precipitate out. The acid is neutralized and disposed of. Periodically, the sump is cleaned to remove lead oxide precipitates and solid materials which are eventually introduced to the blast furnace for recycling.

Operations Description--
Batteries arrive in semi-truck trailers where they are off-loaded by hand into a conveyor belt which brings the batteries up to the location of the shear. One man at the shear separates the rubber-cased batteries from the plastic batteries. The plastic batteries are cast onto a moving conveyor belt which transports the batteries to the polypropylene battery shredder. The rubber-cased batteries are inserted into the shear after which the top is slowly cut off. The shearman then takes the sheared battery case and empties the contents of the battery onto the concrete floor adjacent to the shear. The empty rubber case is then placed on a moving conveyor which transports it to the rubber case shredder. The shredded rubber cases are then stored in a pile prior to removal to the sanitary landfill.

Acid mist and particulate formed in the polypropylene battery shredder are conveyed by duct work to a two-stage scrubber outside the building.

The battery breaking operation is served by ten workers. One man is the foreman, one man is a material handler/truck driver, three men work in the battery breaking operation (two unloading the truck, one shearing), and five men labor in the yards dismantling industrial batteries. Of these five, one man periodically removes battery plates from the shear area to storage bins with a Michigan, rubber-tired, front-end loader.

The plant operates two shifts: 7:30 a.m. to 3:30 p.m. and 3:30 p.m. to 11:30 p.m. The battery breaker operators are on a piece-work program wherein they are paid for the number of batteries processed during the day. A battery breaking crew can break about 6,000 batteries per shift. Unfortunately, as is the case with many incentive-pay programs, personal protection and careful work practices may take a secondary priority with workers.

Description of Emission Sources and Potential Exposures

The primary exposure hazards resulting from the battery breaking operation are lead and acid mist. Acid mist, lead sulfate, and lead oxide may become airborne during the process of shearing the battery top, emptying the battery cases, and during the removal of lead materials from the battery breaking building by front-end loader. Lead becomes airborne through two basic mechanisms. The first mechanism is the mechanical action of shearing, emptying, etc., which causes lead-entrained mist and particulate to become airborne. The other mechanism involves the drying of lead oxide on adjacent surfaces which are then vibrated by equipment, front-end loaders, etc., and become airborne. Acid mist is emitted through mechanical energy being imparted to the acid in the breaking operations.

Exposure Control Evaluation

The battery breaking operations were evaluated using three basic approaches: exposure monitoring through breathing- zone air samples; visual observations; and engineering measurements and engineering design considerations.

The chief methods of exposure control are: the maintenance of all surfaces in a wet condition; the use of an enclosed, exhausted plastic battery shredder; avoiding the use of equipment or operations which would tend to provide energy for pulverization, e.g., the use of a slow-moving hydraulic shear to remove battery tops; and the extensive use of personal protective equipment.

The shear, the batteries, the floor, the conveyor belts, and all equipment in the building are kept wet with automatic and manually applied water sprays. This approach is intended to minimize the secondary evolution of contaminants into the air.

The polypropylene battery shredder is controlled through the use of an enclosed negative pressure exhaust system coupled with a venturi/cyclone contaminant separator. The shredder scrubber is driven by a 112 kw (150 hp) motor running at 1,800 rpm. The fan develops approximately 114 cm (45 inches) of static pressure at the fan inlet. The scrubber consists of a primary venturi scrubber, a secondary venturi scrubber, and a cyclone. The pressure drop across the primary venturi is approximately 13 cm (5 inches), 91 cm (36 inches) across the secondary venturi, 5 cm (2 inches) across the cyclone, and 5 cm (2 inches) in duct friction and hood entry loss.

The duct is a 61 cm (24-inch) square by approximately 27.4 cm (90 feet) in length. The duct is constructed of stainless steel and fiberglass-reinforced plastic. Materials scrubbed from the airstream are sent to a water treatment plant for collection of contaminants. Replacement of the existing scrubber with an

equivalent rotoclone-type scrubber would cost approximately $45,000.00.

The polypropylene shredder cost approximately $150,000 in 1974. It is capable of processing 1,000 batteries per hour.

The company estimated that replacement costs of all the systems associated with the battery breaking operation would be approximately $3.5 million (1978). This cost estimate includes the sumps, the building, the acid treatment plant, the lime bins, and all other associated equipment. Incidentally, the water treatment plant would cost $1.25 million and is included in the quoted figure.

Sampling Results--
Air sampling conducted during battery breaking operations is presented in Table 28. As can be seen, exposure levels to lead during battery breaking operations were above the existing and proposed OSHA lead standards. However, the background levels of airborne lead were also significantly high.

Control Critique

Control of the battery breaking operation has traditionally been one of the most difficult problems to solve. The only sure way to control exposures is to by-pass completely the battery breaking operation. Some steps to achieve that end have been taken (see the study on the Bergsoe smelter). However, it is felt that for the foreseeable future, some battery breaking activities will be required at all battery-recycling secondary smelters.

The approach to control taken at Smelter 1300 has combined four approaches to control which have achieved limited success (see above section on Exposure Control Evaluation). Background levels of lead were too high to accurately assess the control effectiveness for exposure to lead. It can be conjectured that if the background level of airborne lead were removed, resultant lead exposures would be in the 50 - 150 ug/m^3 range.

Control of exposure to acid mist has achieved compliance with the permissible exposure limit.

The effect on resultant exposures by the incentive pay system could not be determined.

HYGIENE FACILITIES

The particular plant was, at the time of the study, completing construction of a brand new hygiene facility for use by employees. Because personal hygiene is so critically important to the maintenance of low blood-leads, a description of this new hygiene facility is presented.

Table 28. Exposure Levels

Employee	Job Title	Time On	Time Off	Exposure Levels (ug/m) Sulfuric Acid Mist	Percent of PEL 100 ug/m^3	Lead	Percent of PEL 200 ug/m^3
J.A.	Battery Breaker	10:07a	2:57p	67	7	107	54
M.M.	Battery Breaker	10:09a	2:55p	117	12	237	118
D.G.	Battery Breaker	10:11a	2:52p	106	11	161	81
J.S.	Yard Labor Driver	10:15a	1:00p	---	--	401	200
M.M.	Battery Breaker	7:24a	10:57a	77	8	246	123
D.G.	Battery Breaker	7:22a	10:57a	82	8	314	157
J.A.	Battery Breaker	7:20a	10:55a	90	9	226	113
J.S.	Laborer-Driver	7:31a	10:58a	144	14	785	393
---	---	---	---	---	---	---	---
Area	Control Room	11:20a	3:00p	---		31	---
Area	Control Room	7:25a	10:59a	---		86	---
Area (Background)	Outside Battery Breaking Bldg.	11:23a	2:58p	---		149	---
Area (Background)	Outside Battery Breaking Bldg.	7:33a	10:59a	---		359	---

The hygiene facility/change house has been designed to accommodate 130 men and 6 women at any time. It has been designed to comply with the proposed OSHA regulations for lead.

The hygiene facility includes a double locker-room change house, a lunchroom, a medical examination room, washing and showering facilities, and a respirator cleaning facility as shown in Figure 84. The hygiene facility is built on the second story of an existing 24 x 37 meter (80 x 120 feet) block building. The cost of the facility is estimated at $466,000 or approximately $3,400 per employee-occupant. Figure 84 presents a simplified schematic of the hygiene facility. It should be noted that all areas within the hygiene facility are to have 10 - 15 air changes per hour. Air handles include absolute filtration for 3/10 micron particles on both fresh air and recirculated air. The building is to be maintained under a slight positive pressure to assist in avoiding exterior contamination from the ambient environment.

The men's locker rooms are separated by a rigid-arm turnstyle which prohibits the employee from returning to the street clothes locker area without going through the shower room. Of interest is the provision for a future air shower. Should this concept be found feasible and acceptable for compliance purposes, the air shower should be studied for adoption at other locations. Note also that electric shoe cleaners are provided at the entrance to the dirty side of the hygiene facility.

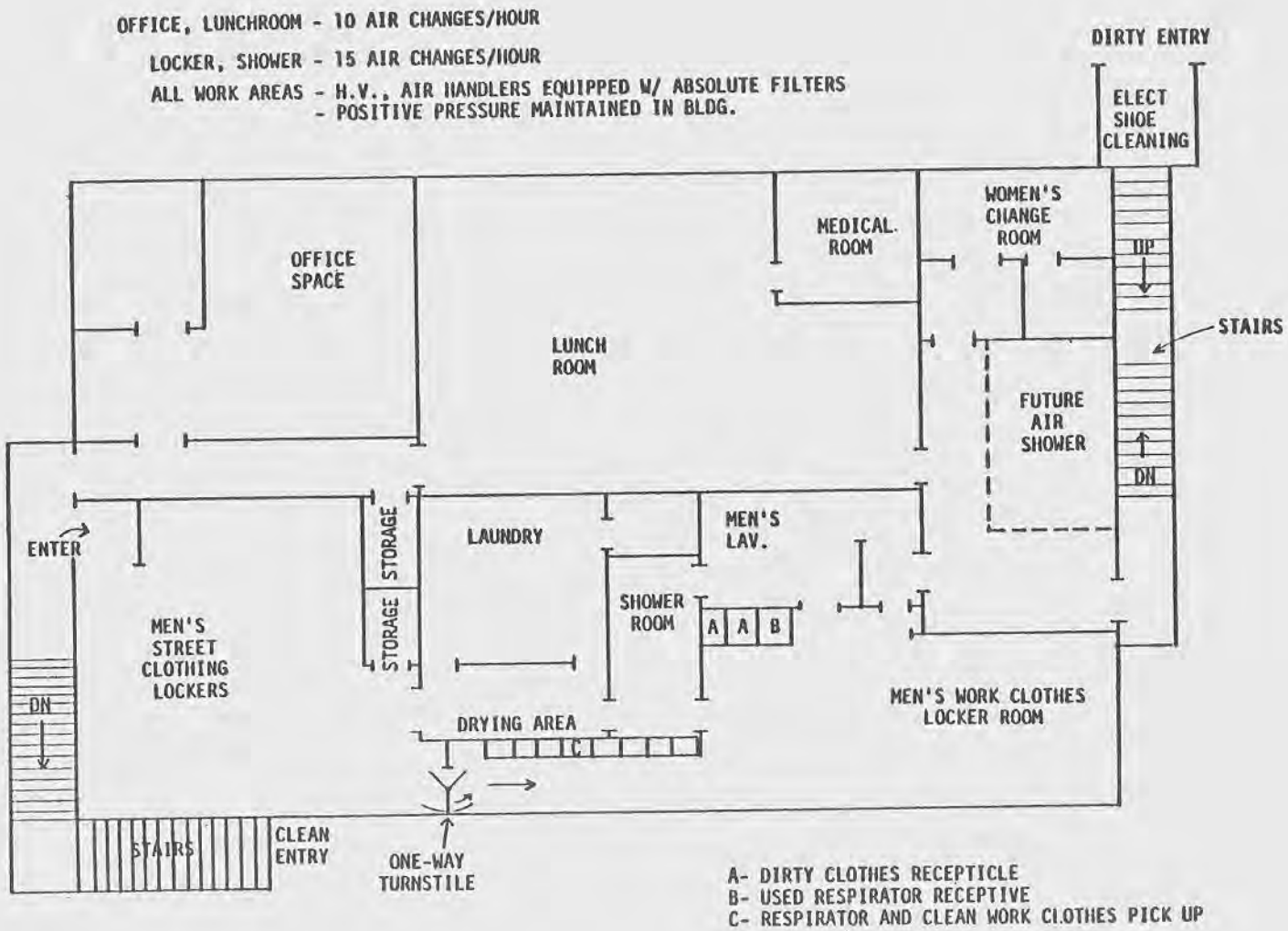

Figure 84. Hygiene facility.

APPENDIX

"PLANT RESPIRATOR PROGRAM" AND

"HEALTH MAINTENANCE OF WORKERS EXPOSED TO INORGANIC LEAD"

FOR SMELTERS 2140 AND 2090

PLANT RESPIRATOR PROGRAM

GENERAL

Respirators are in use in the plant as an interim measure. Basic respirator in use is judged on its ability to remove or filter out fume or fume/dust and mists not in excess of 1.0 mg/m^3. All respiratory equipment is provided by the plant in compliance with the standards expressed in the U.S. Department of Labor, Occupational Safety and Health Standard Guide 1910.134. Mandatory wearing is enforced through the use of stringent disciplinary action taken by the company. The actions taken for failure to adhere to the rules are spelled out in "The Plant Rules" and "The Plant Safety Rules."

SELECTION OF RESPIRATORS

Respirator Control of Lead Dusts, Fumes, and Mists. (Basic respirator in use unless otherwise specified in the program)

- o Willson #1211 respirator with color coded gray R11 filters for respiratory protection against dusts, fumes, and mists having a time-weighted average not less than 0.05 mg/m^3, dusts and mists having a time-weighted average not less than 2 mppcf, and asbestos-containing dusts and mists. TC-21C-141 issued to Willson Products Division, January 22, 1974.

- o 3M #W-250 powered air-purifying respirator with #W-2008 vehicle mounted system for respiratory protection against dusts, fumes, and mists having a time-weighted average less than 0.05 mg/m^3 or 2 mppcf with the approval #TC-21C-136.

  - System provided for all employees required to enter or work consistently in areas detected and identified as being high exposure areas not in excess of 200 mg/m^3.
  - System has the benefit of a helmet with air supplied in a continuous flow mode.

Respirator Control of Sulphuric Acid Mists

- o Sulphuric acid mists are a recognized and well defined hazardous condition in existence in our Battery Decasing Department.

  - Corrective measure taken on an interim basis is the provision of Willson #1211 respirator with #R25 color coded yellow cartridges under an approval TC-21C-141.

Respirator Control of Carbon Monoxide, Sulphur Dioxide Gases

- o Compressor-supplied air through the use of a 3M #W-270-25 General Purpose System.

- o System provided for employees operating in well defined areas reflecting the aforementioned gases.

- o Air-line hook-ups are so designed that they are incompatible for tie-in to a non-breathable gas connection.

  - Compressor is constructed and situated to be free from contaminants and provided with purifying sorbent beds with filters to assure the proper breathing air quality.
  - An Enmet #ISA 33-RAL CO monitor and high temperature alarm is provided to insure proper equipment operation.

Control of Anhydrous Ammonia Gas

- o Anhydrous ammonia is stored in a tank on the plant grounds. To protect against this peculiar problem, the plant provides two MSA Anhydrous Ammonia Emergency Kits Type GMB, #14F-158, color coded green cannisters with a gray band on the upper rim.

- o These kits are housed around the Anhydrous Ammonia Storage Tank.

Back-Up Units

- o As a safety precaution, back-up gas masks and cannister sets are maintained in the plant under the control of the Supply Room attendant.

- o These MSA Type N #81524 sets are general in nature in that they may be used as emergency protection against CO, SO_2, anhydrous ammonia, particulates, dusts, mists, and fumes.

TRAINING/INDOCTRINATION IN RESPIRATOR USAGE

Pre-employment orientation consists of:

- o identification of a respirator;
- o definition and purpose of each and every respirator provided by the plant;
- o limitations of each and every respirator;
- o demonstration of the proper method of wear;
- o demonstration and discussion on how to inspect and clean all respirators; and
- o presentation on features that will prevent one from deriving full benefits of a respirator.

Program Re-Enforcement for Long-Time Employees

- o Five-Minute Safety Talks consist of proper methods of inspection and usage of a respirator.

- o Program administered by TAC Coordinator

  - signature of each employee involved with five-minute talks and a copy inserted in employee's records;
  - observance and correction of improper usage of the respirator is to be a function of all concerned supervisory personnel on a daily basis; and
  - failure to comply or wear the safety equipment provided by the plant will lead to disciplinary action authorized by the "Plant Safety Rules" and "The Plant Rules."

RESPIRATOR MAINTENANCE

Assignment of Respirators

- o All in-plant supervisors and employees are issued two clearly identified respirators for their individual use. Identification markings consist of the employee's salary or clock number.

- o Office personnel are issued one clearly marked respirator (Salary ID Number).

- o Visitors are issued one disposable respirator 3M #8710 TC-21C-132. These visitors are distinct in that some merely enter to deliver goods; consequently, their stay is of short duration.

  - Visitors in the form of contractors or the like, are provided by the plant with the respirator appropriate to the area that they are working within.

- Emergency or backup respiratory devices are not assigned to any specific employee. This equipment is housed in its respective aid station.

- Vehicle mounted and compressed air respirators are assigned to each shift by job designation.

Cleaning, Inspection, and Repairs

- Respiratory equipment provided by the plant shall be cleaned and inspected by the Supply Room attendant.

- Equipment is cleaned with a solution of warm water and Zepsecure Soap.

- During the course of cleaning, any defective equipment is repaired or replaced immediately.

- In-plant supervisors and workers are required to secure a clean respirator prior to the undertaking of a new shift.

  - Based on inspection procedures employees ascertain, with the aid of the Supply Room attendant, as to whether the dual cartridge filters or faulty parts should be replaced. Should a question arise as to the operational level of any equipment the Department Supervisor makes the decision on correction or replacement.
  - An equipment sign-out procedure is in effect to verify employee change-out of defective or dirty equipment. The TAC Coordinator will review the sign-out log weekly to weed out potential problems.

- Office personnel are required to place their respirators every Friday afternon in a collection box so that they may be cleaned and inspected by the Supply Room attendant by the start of the next work week.

- Respirators used by visitors will be submitted for cleaning after every use.

- Emergency or backup respiratory equipment is inspected and tagged once a month by the Supply Room attendant. Emergency/backup equipment is cleaned and inspected after each use.

Protection of Cleaned Equipment

- Each respirator, once cleaned and disinfected, is enclosed in a plastic bag and secured with twist locks to prevent contamination.

- Respiratory systems, i.e., compressed air and 3M white cap systems, are cleaned and inspected by the Supply Room attendant every two days.

- Respirators not returned to use or emergency stations are stored in clearly marked cubicles until requested. The storage area provided is the Safety Supply Room under the supervision of the Supply Room attendant.

RESPIRATOR PROGRAM ASSESSMENT

All potential employees are administered a doctor supervised health and physical examination prior to assuming a position in the plant. This examination answers the question as to whether one is medically and physically capable of using a respirator in the performance of their intended duties.

Monthly tests are taken with the use of personnel and hy-volume samplers to deduce and correct lead caused conditions or stressful situations which could affect the relationship between the worker and his respirator. Biological monitoring in the form of a blood/lead sampling program is administered monthly with referrals to a physician if indicated by levels reflected through an analysis conducted by Environmental Science Association of Massachusetts.

Environmental tests covering carbon monoxide and sulphur dioxide are conducted on a monthly basis by the plant environmentalist (see Environmental Testing Program).

UPDATING AND CORRECTIONS IN THE PLANT RESPIRATOR PROGRAM

The responsibility of maintaining a program within compliance with all corporate, Federal, state, and city standards is a function of the plant TAC Coordinator with assistance from all concerned supervisors and employees.

LIMITATIONS OF RESPIRATORS IN USE BY THE PLANT

The respirators identified within the respective program as being used by the plant include the following.

Willson 1200 AR700 Series Respirator.

This respirator can be equipped with the necessary filtering device so that it may protect against virtually every harmful contaminant found in our facility. The filters in use by our plant are the R11 Filter Cartridge and the R25 Filter Cartridge. The approval numbers are TC-21C-141 and TC-23C-76, respectively. The unit is worn only by those who are verified by the TAC as being physically/medically sound.

Willson 1211--
This respirator is approved for use in an atmosphere possessing 19.5 percent oxygen or more. This unit does not supply breathable air. The 1211 is therefore designed to protect against dusts, mists, and fumes having a time-weighted average not less than 0.05 millgram per cubic meter, dusts, and mists having a time-weighted average not less than 2 million particles per cubic foot.

Willson 1225--
This respirator and cartridge are designed to protect against not more than 1,000 parts per million organic vapors, 10 parts per million chlorine, 50 parts per million hydrogen chloride, or 50 parts per million sulfur dioxide. This unit is to be used in an atmosphere of at least 19.5 percent breathable air. It must not be used while working in or around organic vapors with very little warning properties or those which generate high heats of reaction with sorbent material in the cartridge.

Scott Twin Cartridge Respirators

The Scott Twin Cartridge Respirators 600141-12 and 600141-32 matched with the 6004412-50 Hi-Efficiency Filter TC-21C-179, are also used by the facility. The purpose is to insure that the 10 percent of individuals who possess facial types which prevent their wearing the Willson 1200 are adequately served. The above mentioned limitations do apply (see "Willson 1200 AR700 Series Respirator).

MSA 457126 Ultraview Facepiece Gas Mask

The MSA 457126 Ultraview Facepiece Gas Mask with 81524 Type N All-Purpose Cannister is used as a back-up unit to our basic respirator. This equipment does not supply breathable air. The MSA Unit is to be used for protection against the inhalation of no more than 20 percent acid gases, organic vapors, or carbon monoxide; 3 percent ammonia; or 2 percent total when more than one class is present. The unit also protects against dusts, mists, fogs, and smokes having TLV of not less than 0.1 milligram per cubic meter or 2.4 million particles per cubic foot. An additional safety feature is the window indicator in each cannister which shows the ability of the cannister to remove carbon monoxide. The color indicator will change from a light blue color to a dark tint signifying the inability of the cannister to filter out carbon monoxide.

3M Brand Whitecap Systems

These systems are used in situations that are well defined as being high exposure areas. The 3M W-260 System is a powered air vehicle mounted; the 3M W-250AD is a powered air back pack unit; and the 3M W-880 is a compressed air unit.

3M W-260--
The 3M W-260 has the National Institute for Occupational Health and Safety (NIOSH) approval TC-21C-136A. The system is composed of a W-2008 Powered Air Purifier, W-5005 Whitecap helmet, W-9450 Belt to Helmet Assembly, and W-5108 Breathing tube. This unit is approved for respiratory protection against dusts, fumes, and mists having a time-weighted average less than 0.05 milligram per cubic meter, radionuclides, and radon daughters attached to the dusts, fumes, and mists described above. The 3M W-260 is not not for use in atmospheres containing less than 19.5 percent oxygen or in atmospheres containing toxic gases and vapors. The filters on this unit must be changed at 160 hours of use or when the air-flow falls below 6 cubic feet per minute.

3M W-250 AD Powered Air Unit--
This unit consists of the W-5005 Whitecap Helmet and the W-2009 AD Powered Air Purifier. The limitations are the same as those which pertain to the W-260 system. The approval number is therefore the same NIOSH TC-21C-136A.

3M W-880--
The 3M W-880 has a NIOSH approval number TC-19C-70 and consists of the W-5005 Whitecap Helmet, W-6803 Vortex Cooling Tube, and the W-9435 High Pressure Hose in 25-foot, 50-foot, or the maximum 100-foot lengths. This system is acceptable in any atmosphere not immediately dangerous to life or health and from which the wearer can escape without aid of the respirator. The acceptable pressure range of 65 to 90 pounds per square inch gauge.

Scott Presure-Pak IIA with Aluminum Cylinder (TC-13F-40)

Scott Presur-Pak IIA--
The Scott Presur-Pak IIA unit is made up of the 800020-64 Harness and Backplate, 800000 12 cylinder and valve, 800212-00 regulator assembly, 800029-00 hose coupling, and the 801500-15 face piece and tube assembly.

Limitations--
This unit is approved for respiratory protection during entry into and escape from oxygen-deficient atmospheres, gases, and vapors, at temperatures above 25°F. The Presur-Pak IIA is approved only when the compressed air container is fully charged with air meeting the requirements of the Compressed Gas Association, G-7.1 for Type 1, Grade D Air, or equivalent specifications. The container shall be marked "Fill With Compress Air Only" and shall meet applicable Department of Transportation (DOT) specifications. The demand made shall be used only when donning the apparatus. The unit is to be used with adequate skin protection when worn in gases or vapors that poison by skin absorption.

HEALTH MAINTENANCE OF WORKERS EXPOSED TO INORGANIC LEAD

PREFACE

This material represents a brief guide to physicians who have a responsibility for the health maintenance of workers who are exposed to inorganic lead. Health assessment and maintenance related to other exposures and activities should be added as appropriate. Administration, industrial hygiene, and safety, although not included in this guide, are important aspects that must be incorporated in the overall health maintenance program of workers exposed to lead. The physician should be familiar with company programs in these areas and coordinate his activities with them. Particular importance is attached to the physicians' understanding of plant operations, levels of exposure, and personal protective measures.

As in all areas of medical practice, individualized clinical assessment and medical management are necessary for the most effective results in the health maintenance program for lead workers. In this context, the material contained herein represents guidelines and should be modified, by the responsible physician, based on individualized circumstances.

Revisions will be supplied as new information becomes available. Questions and suggestions for change are welcome.

PHYSICAL AND CHEMICAL PROPERTIES OF LEAD

Chemical Symbol	Pb
Form	Soft, ductile, solid metal
Color	Bluish-gray
Molecular Weight	207
Atomic Number	82
Valence	2, 4
Specific Gravity	11.34 (water = 1)
Melting Point	620°F (327°C)
Boiling Point	2,777°F (1,525°C)
Vapor Pressure	0.1 mm Hg at 80°C

Little fume is produced below 900°F but molten lead rapidly oxidizes. When the surface is disturbed, finely divided lead oxide may be thrown into the air. It dissolves in acid. Exposures in the industry are dusts, fumes, and lead entrapped in mists.

NORMAL METABOLISM

Lead is present in all humans. It enters the body from the air breathed and the food and beverages consumed. Most of the body burden of lead is from lead in food. The amounts of lead in humans around the world appears to be relatively constant. Persons exposed to lead in industry or who have added non-industrial

exposures will have increased amounts of lead in their bodies. Within limits to be discussed later these increased levels are compatible with continued good health for the lifetime of the individual.

While lead is a uniformly present constituent in the human body, its role in normal physiology, if any, has not been clearly elicited. It has been suggested but not documented that lead, like many other trace elements, may play a necessary role in human metabolism.

Absorption

Oral--
Approximately 5 to 10 percent of lead in the GI tract is absorbed into the blood stream. This amount may vary with the acidity, solubility, motility, and other gastrointestinal and physiological factors.

The normal dietary intake from food and beverages is approximately 300 ug (micrograms) per day. Increases up to about 450 ug/day may not produce measurable increases in blood lead, but could result in very slow accumulation of lead in bone and perhaps other tissues. With oral intake over 1 mg/day there is a gradual accumulation of lead in the body with increased blood lead levels.

Oral absorption of lead is a significant hazard in industry. Exposure may be direct from hands or food or indirect from swallowing of particles cleared from the respiratory tract by mucociliary action and macrophages clearing inhaled particles from the lung.

Inhalation--
Absorption varies with particle size, density, solubility, mucociliary action, rate, and depth of respiration and perhaps other factors.

The fate of lead deposited in airways is not certain. Approximately 50 percent of that which is inhaled is immediately exhaled and unavailable for absorption. Of that which is retained, 9 percent appears to be cleared directly to the blood and 45 percent is cleared to the GI tract where about 10 percent is absorbed. This results in an estimated net absorption of about 15 percent.

Absorption of lead by inhalation is a significant hazard in industry. It serves as the basis for the threshhold limit value (TLV; time-weighted average for an 8-hour day). Lead absorbed via the gastrointestinal tract from industrial exposure, although an important contributor to exposure, is not considered in the derivation of the TLV.

Skin--
Absorption of inorganic lead directly through the skin is not a hazard. Lead on the skin may enter the body secondarily via ingestion.

Significant absorption of organic lead can occur through the skin, but not from the organic lead (TEL, tetraethyl lead) in gasoline which may be spilled on the skin; the lead is too diluted.

Excretion

Feces--
This is the primary route of elimination and accounts for 80 to 90 percent of the lead removed from the body. Both air and food lead account for lead found in the feces. Measurement of fecal lead may be useful as a measure of recent exposure.

Urine--
This route accounts for about 10 percent of the total amount excreted.

Sweat--
May approximate the amount found in urine, but data is conflicting and amounts may vary based on amount of sweating and acclimatizaton.

Hair and Nails--
Rates are not well defined, but lead is present in both.

Deposition

Skeleton--
After passing through the blood and soft tissue, most of the absorbed lead is eventually deposited in the skeleton. Skeletal lead accounts for over 90 percent of the body burden of lead, 70 percent being in dense avascular bone where it is considered to be biologically inert. Males have more lead in their skeletons than females. The concentration of lead in bone increases with age, more in males than in females, while the blood lead remains stable.

Other Organs--
Lead concentration is stable with time other than in the aorta where slight increases occur with aging.

There is poor evidence that lead can be rapidly mobilized from bone or other tissues during illness or from acidosis to cause acute symptoms.

TOXICITY

The diagnosis of lead poisoning should be based on clinical findings supported by biochemical evidence of excessive lead absorption and adverse effects. Where possible one should demonstrate exposure to lead. Occasionally, the latter requires diligent investigation. This is important because the worker may not have knowledge of a source of non-occupational exposure away from work. The apparent cause may not be the real one.

The diagnosis of lead intoxication cannot be made solely on the basis of finding an increased amount of lead in the body. There is no level of lead in blood which is pathognomonic of lead intoxication. This must be a clinical diagnosis supported by laboratory findings.

Individuals may have increased amounts of lead in their body without clinical or subclinical effects. Others not having symptoms may have significant physiological alterations secondary to increased absorption of lead. This is often referred to as subclinical lead intoxication. The term has been criticized by some who feel that intoxication must include clinical signs and symptoms.

Mild symptoms and signs of lead poisoning include: tiredness, lassitude, constipation, slight abdominal discomfort or pain, anorexia, altered sleep pattern, irritability, anemia, pallor, diarrhea, and nausea. Many of these symptoms and signs are found in other medical conditions and it is, therefore, essential that the symptoms and signs be associated with laboratory evidence of excessive absorption and other biological indicators or physiological effects of lead before making a diagnosis of lead poisoning. The presence of a lead line at the gingival margin is not a toxic effect of lead, but simply a demonstration of the presence of lead. The line is caused by precipitation of lead sulfide (PbS) from the action of small amounts of hydrogen sulfide (H_2S) produced by bacteria. The lead line is not seen in edentulous workers. Because of the infrequent presence of gingivitis in children, it is rarely seen in the young.

Acute (Three Main Types)

Gastrointestinal (Most Common Form)--

- intestinal colic (classic symptom);
- associated symptoms, i.e., tiredness, anorexia, constipation, insomnia, metallic taste, irritability;
- signs, i.e., ashen color which may resemble lead, lead line.

Neuromuscular--

- Classic picture: motor involvement of most frequently used extensors--wristdrop, footdrop. In modern times, it is infrequently seen in its classic form.
- No sensory changes.
- Nonspecific associated symptoms; generalized vague muscle weakness, muscle aching, cramping.
- Gastrointestinal symptoms are frequently present as well.

Encephalophathic--

- Most serious form.
- Extremely rare in adults working in lead industries. Most of the recent cases have been reported in individuals drinking lead-contaminated moonshine.
- Symptoms include headache, insomnia, bad dreams, personality changes, convulsions, coma, recovery, or death.
- Gastrointestinal symptoms are frequently present.
- Severe anemia almost always found.

Chronic

The incidence of sequelae and chronic poisoning increases not only with an increase in absorption, when the latter is excessive; but also with the length of time that this excessive absorption is allowed to continue. Therefore, significant biochemical alterations resulting from excessive absorption, with or without clinical manifestations of poisoning, should be followed by appropriate industrial and/or medical action. On the other hand, workers who have not had persistent unacceptable exposure to lead and who have not had repeated episodes of acute lead intoxication are not expected to have any sequelae from industrial exposures to lead.

Kidney--

- Interstitial nephritis with increased BUN, intranuclear lead inclusion bodies, proteinuria, hyperphosphaturia, aminoaciduria, and inability to form an acid urine. Hypertension may occur. The chronic end stage kidney cannot be differentiated from other forms of interstitial nephritis.

- Tumors--none have been demonstrated in humans from chronic exposure to lead. Renal tumors have been seen in rats.

- Gout--reported in heavy drinkers of lead-contaminated moonshine. Lead has not been proven as a causative agent.

- Neurological--no permanent changes are expected in the absence of severe acute episodes. In children permanent sequelae are frequent only if convulsions occur. Similar findings could possibly occur in adults permitted to have lead encephalopathy with convulsions. With proper medical supervision this should never occur from industrial exposures.

HEMATOLOGIC EFFECTS

Lead affects heme synthesis in a number of ways. A condensed schematic showing the normal pathways for the formation of hemoglobin with the possible enzymatic steps inhibited by lead and the metabolites and abnormal products which may be accumulated in human lead poisoning is depicted in Figure A-1.

The most frequently measured metabolites have been coproporphyrin III and delta aminolevulinic acid in the urine. The measurement of Free Erythrocyte Protoporphyrin (FEP) in blood is becoming increasingly common primarily in lead screening programs in children. The protoporphyrin from lead effects is generally bound with zinc and may be measured as zinc protoporphyrin in the red cells directly without extractions.

The significance of the inhibition of ALA-D in blood by lead is not well understood. It is also depressed by alcohol and tends to be linearly related to blood lead within the "normal" range of blood lead. These and other factors, such as instability, limit its usefulness in a health maintenance program for lead workers. Other effects may include increased basophilic stippling of red cells, reticulocytosis, decreased osmotic fragility and reduced red cell survival time. Correlation of alterations in enzymes and metabolites with hemoglobin production and clinical status is not generally good, raising questions about the true physiological significance of many of these changes. Dogs fed sufficient amounts of lead to produce major alterations in these enzymes and metabolites do not show inhibition in their ability to regenerate blood following severe experimental phlebotomy.

If the hemoglobin and/or hematocrit are markedly altered by lead, this represents a significant adverse physiological effect for which corrective measures should be instituted.

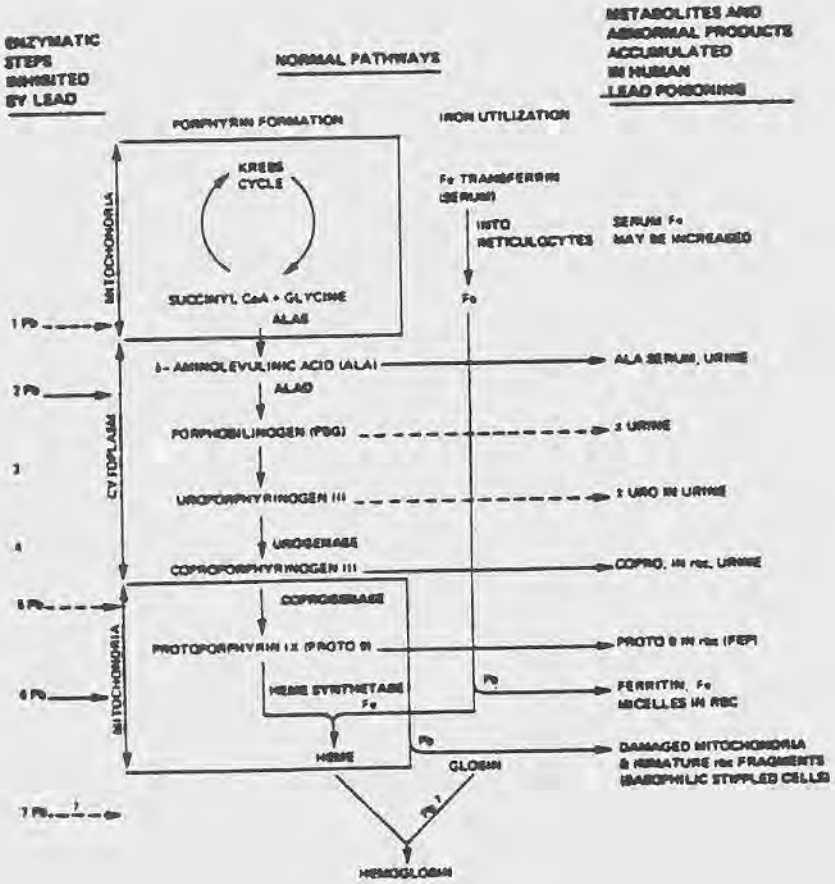

Figure A-1. Normal Pathways for the Formation of Hemoglobin.

PRE-PLACEMENT ASSESSMENT

Individuals who will work with inorganic lead should be carefully assessed before placement. Those recommended should not have an increased risk of adverse effects from their exposure to lead or have conditions which would make it difficult to separate possible effects of lead from other nonrelated health problems. They should not have conditions which will be aggravated by their exposure to lead. The evaluation serves as a basis for future biological monitoring, health evaluation, and research. The role of the physician is that of advising management and the employee. This advice should be in the form of a medical recommendation rather than an administrative decision.

History

A detailed general medical and occupational history should be obtained. This should include an identification of past and present exposure to lead, both occupational and nonoccupational, personal habits (smoking, hygiene, hobbies, alcohol consumption), history of present or past gastrointestinal, hematologic, renal, hepatic, neurological, and psychological problems. A careful genetic and gynecological history should also be obtained.

Physical Examination

A complete general physical examination should be performed. Particular attention should be directed to those aspects which may affect one's absorption of lead, response to lead, and possible confusion with effects from lead. These include, but are not limited to, personal hygiene, teeth, gums, hematologic, gastrointestinal, renal, neurological, psychological, and cardiovascular systems. Pulmonary status is also important and should be evaluated with particular reference to the ability of the individual to use respiratory protective devices. Facial hair should be evaluated from the standpoint of possible interference with a good fit of a respirator. The examination should be performed with the examinee completely disrobed.

Laboratory

Laboratory tests should include, at the minimum, a complete blood count, urinalysis including microscopic, and blood lead. Other studies which may be considered are VDRL, urine lead (if it will be used in the health maintenance program), uric acid, creatinine, BUN, and other chemistries on SMAs, FEP, and urinary ALA, etc. X-rays are not needed from the standpoint of lead, but chest and back x-rays may be desirable for complete evaluation and proper placement.

PRE-PLACEMENT ASSESSMENT

General

The safe levels of exposure to and absorption of lead are intended for healthy adults. Persons with significant findings on history, physical, and laboratory should not be employed in areas where they will have added exposure to lead. These individuals may not be capable of handling the additional lead safely. The extra exposure may produce additive adverse effects on pre-existing conditions. It may be difficult to separate effects of lead from those of pre-existing nonlead-related causes.

Women

Special attention is needed in the evaluation of women for suitability to work with lead. Although there is some evidence that women are more sensitive to the effects of lead, this is open to question and presently should not serve as a basis for justifying any difference in the exposure of women versus men to lead.

The primary question to be considered in evaluating women for work in lead exposure areas relates to lead exposures during pregnancy and lactation where a number of problems are posed. It is definitely known that lead crosses the placenta, and fetal blood lead will equal that in the mother. Levels of lead in blood acceptable for adults are considered unacceptable for children. Lead appears to have a greater effect on the central nervous system in children than it does in adults. The developing central nervous system is generally more sensitive to the effects of toxic agents (probably includes lead) than the mature system. Learning disabilities have been demonstrated in animals born to mothers who had very slight elevations of lead produced during the gestational phase. The levels were in the range considered occupationally acceptable for adults. Teratogenic effects have been produced in animals fed high doses of lead. Historically, high exposures to lead have been associated with fetal death and abortion. Lead levels in the adult do not decrease rapidly following removal from exposure, particularly when exposure has been of long duration.

Since the major adverse effects, if any, may be expected to occur in the first trimester when the woman may not know or state she is pregnant, it is recommended that fertile women not receive added exposure to lead. Pregnant or lactating women fall into the same category. Each woman applicant should be medically evaluated on an individualized basis and possibly in medical consultation with her personal physician to arrive at a decision as to what would be best for her relative to her potential exposures to lead.

PERIODIC ASSESSMENTS (BIOLOGIC MONITORING)

The purpose of periodic assessments is the prevention of acute and chronic effects from lead and assurance that the worker has no condition that would require modification of his continued exposure to lead. Individuals differ in their rates of absorption and response to potentially toxic agents. Differing signs, symptoms, and biological effects may be present at similar levels of absorption for different individuals.

Blood leads and other studies should only be done in laboratories approved by NL. All laboratories should be checked periodically on a blind basis for precision and accuracy. Abnormal results should be confirmed. The physician must be personally convinced that the data he receives are accurate and precise, and personally review all results.

Biological Monitoring--Laboratory

Blood Lead--
Blood lead is the best practical indicator of lead absorption. It integrates all exposures including airborne, ingestion, industrial, home, and environmental.

Lead is bound to the red cells with only fractional amounts in the plasma or serum. In practice, it is measured in whole blood and reported as blood lead rather rather than as plasma or serum lead. Based on long clinical experience it is known that if the blood lead is not permitted to rise over 80 micrograms per 100 grams of blood, no clinical symptoms of lead intoxication or short- or long-range significant adverse health effects are anticipated. Persons in the general population not exposed to additional lead will have a blood lead in the range of 5 - 40 ug per 100 g. If blood lead increases above this range there may be measurable changes in indicators of heme synthesis. These are generally considered compatible with continued good health within the ranges to be defined later. The further blood lead rises toward or exceeds 80 ug/100 g, the less the margin of safety. Blood lead levels should be maintained as low as possible. The level of 80 ug should not be look upon as the level to which blood leads may be permitted to rise without concern.

There is no level of lead in blood synonymous with lead poisoning. As described earlier, this is a clinical diagnosis. Though many individuals can tolerate blood lead concentrations in excess of 80 ug/100 g without recognizable ill effects, this should not be permitted because of the potential for acute intoxication and subtle development of chronic effects. In order to maintain the blood lead concentrations below 80 ug/100 g it is necessary to conduct biological monitoring and to evaluate individual exposures and take administrative and/or engineering steps to reduce exposure when necessary. The frequency for blood lead

analysis depends on a number of factors relating to the severity of exposure, health status, and previous determinations. The following is a suggested schedule (blood lead reported in mg/100 g):

1. Prior to employement (0.03 maximum acceptable).
2. All new employees, monthly for four months.
3. Employees stable below 0.05, every six months.
4. Employees stable between 0.05 - 0.06, every three months.
5. Employees stable between 0.06 - 0.07, every two months.
6. Employees over 0.07, at least monthly.
7. Any employee having an incresase of 0.02 from one test to another, monthly until stable.
8. Any employee showing a definite upward trend from one period to another, at least monthly until stabilized.

There have been suggestions that the blood lead be corrected to a standard hemoglobin or hematocrit since the lead is attached to the red cell. The documentation for this is not well suported in the literature and the recommendations are generally based on a postulation rather than hard data. The correction has not been a generally followed practice in health maintenance programs and at this time, there seems to be insufficient justification for the correction being made on a routine basis. Workers with low hemoglobins should be given special attention as discussed later.

Urine Lead--
Urine lead is less useful than blood lead for monitoring individual exposures. Wide fluctuations occur secondary to urine flow, specific gravity, recent exposures, and contamination. These problems are of particular concern with small volume spot samples. Samples of larger volumes, preferably 24 hours, reduce some of the variables but increase the likelihood of contamination. It is often difficult to obtain adequate worker cooperation in the collection of these long-term samples.

There may be some value in correcting the lead concentration in urine to a standard specific gravity of 1.024 (some have suggested 1.018) per gram of urinary creatinine. In practice, the major sources of concern are in urines of very high or very low specific gravity. Spot specimens with a specific gravity under 1.010 should be discarded. It is often preferable to simply obtain another specimen rather than make the large correction. In the intermediate range, the correction is of less magnitude and probably also of lesser value. Correcting for specific gravity of creatinine adds the inconvenience of another measurement as well as the added burden of assuring accuracy of these determinations.

Other factors which may affect urinary lead concentration include: the level of physical exertion, season, day of the week, and recency of last exposure to lead. Bearing in mind all these

limitations, the upper limit of safety where occupational exposure to lead is fairly uniform is 0.13 milligrams per liter for samples that exceed 0.18 only infrequently and exceed 0.24 mg only rarely. This standard can be applied to an individual or to a small number of individuals only after the collection of multiple samples from the individual or individuals in sufficient numbers to provide a statistically stable group of observations. It is also useful to make repeated comparisons with blood lead to serve as a baseline for future interpretation of urine lead results. The physician responsible for the health of lead workers must be personally convinced of the comparability of urine and blood lead results based on all the variables.

Heme Metabolites--
Lead interferes with the normal synthesis of heme at many sites resulting in increased levels of metabolites and abnormal products in urine and blood. Those most extensively studied include urinary coproporphyrins, urinary delta aminolevulinic acid (d-ALA), free erythrocyte protoporphyrin (FED), zinc protoporphyrin and delta aminolevulinic acid dehydratase in blood (ALAD). The determination of one or more of the levels of these may be used in conjunction with, but not in place of, the blood lead. It is possible that they may help identify individuals who are having relatively greater effects from absorbed lead. For instance, a worker with a blood lead of 50 ug/100 g and markedly elevated urinary porphyrins and d-ALA in urine or FEP should be monitored more closely than a worker with the same blood lead and lower or normal heme metabolites. They are not recommended as a routine for every program at this time, but may be incorporated on a local basis at the discretion of the plant physician.

Blood Counts--
All workers should have hemoglobin and hematocrit determinations made periodically. Where blood lead remains under 70 ug/100 g, once every six months may be adequate. If the blood lead is over 80 ug/100 g the determination should be made more frequently. Repeats should be done as often as indicated to adequately follow the worker. At no time should the blood count be permitted to fall significantly and lead exposure continue. This applies whether the cause for the fall is lead or another medical problem. "Significant" refers to a fall and/or absolute level. A decrease from 18 to 15 gm Hb may be very significant, whereas the level of 15 gm, if stable, may be completely normal. A hemoglobin under 14 gm in a male or 12 gm in a female should signal concern for the continued exposure to lead regardless of the cause. Etiologies for the anemia should be explored. Sex, socioeconomic and other factors should be considered in the evaluation.

Punctuate Basophil Counts and Qualitative Urinary Porphyrins--
These tests are unreliable, frequently not related to lead, and are not recommended as tests to perform routinely as a part of biological monitoring.

Hair Lead--
This test is not recommended for monitoring of industrial workers at this time.

Lead Line--
The lead line represents precipitation of lead sulfide by the action of hydrogen sulfide from bacteria at the gingival margin. It does not indicate lead poisoning. The "line" is not seen in edentulous individuals and only infrequently seen in children who rarely have gingivitis. It is easily confused with a normal bluish discoloration on the gums of some workers. If noted, its presence should be recorded.

Categories of Lead Absorption and Effect

Table A-1 is an outline for levels of biological indicators of lead absorption. It is not to be used to diagnose lead intoxication.

Table A-1.

Test	Normal	Acceptable	Excessive	Dangerous
Blood Lead (ug/100 g)	<40	40-80	80-120	>120
Urine Lead (ug/L)	<80	80-150	150-250	>250
Urinary Coproporphyrin (ug/L)	<150	150-500	500-1,500	>1,500
Urinary d-ALA (mg/L)	<6	6-20	20-40	>40

The four arbitrary categories are:

- Normal: Absorption found in the "normal" population when there has been no occupational or abnormal exposure.

- Acceptable: Increased absorption and effects resulting from occupational or abnormal exposure which is occupationally acceptable. At these levels of lead absorption, mild symptoms which are common to a number of minor complaints are not generally attributable to lead.

- Excessive: Increased absorption and effects from excessive occupational or other exposure which may be associated with mild symptoms or signs, or, rarely, with severe symptoms or signs. Even in the absence of symptoms or signs these levels of absorption are unacceptable because of the possibility of toxic episodes and long-term sequelae.

- Dangerous: Absorption and effects from occupational or other exposure in which mild and severe symptoms and also long-term sequelae are increasingly probable.

CLINICAL MONITORING

General

All workers should be encouraged to discuss their medical problems with the plant physician. Where there are questions that symptoms or signs may be related to lead, the appropriate evaluation should be made through the plant or in cooperation with the worker's personal physician. The effects of lead are often nonspecific and may be easily confused with other medical conditions. The worker should be made to feel comfortable in discussing his problems with the plant physician from whom he should receive honest answers and a sympathetic ear. Discussion with the worker's personal physician is to be encouraged. This will utlimately serve the worker's and employer's best interest in having a correct diagnosis established. Poor communications often result in an unwarranted diagnosis of lead poisoning and may curtail further medical evaluation of problems not related to lead.

Increased Lead Absorption

All lead workers should be assessed periodically by a physician. The frequency and scope of the assessment should be determined on an individualized basis. Workers with excessive and dangerous levels of lead absorption should be evaluated immediately by a physician. The goal is to determine the state of the worker's health generally and more specifically, from the standpoint of lead. The assessment may range from a simple history with limited physical examination to more complete studies. Enough should be done to confirm that the worker does or does not have significant clinical of subclinical effects from his lead exposure. The presence of other disease processes which may be confused with lead or aggravated by lead should be identified and corrected.

The physician should use this and any other opportunity to develop a productive rapport with the employee, encourage good personal hygiene, the proper use of personal protective equipment, and good work practices.

The following actions (shown in Table A-2) should be taken depending on the blood lead concentration. Other factors such as clinical status may warrant modifications.

Table A-2

Blood Lead (ug/100 g)	Action
70	o Repeat analysis of lead in blood. o Investigation of employee's work habits to determine cause of excessive absorption.
80	o All of the above. o Reduction of employee exposure. o Medical review.
100	o All of the above o Immediate reduction of exposure by administrative means until corrected blood lead concentration is reduced to below 70 ug/100 g or until the physican authorizes a higher value.

TERMINATION ASSESSMENT

It is desirable to perform an assessment of the employee's state of health at the time he terminates from the company. This should include a blood lead and other studies similar to those performed on the preplacement assessment.

The termination assessment has a number of functions. It helps provide an accurate record of the employee's health for medical, epidemiologic, and legal purposes when he leaves the company. It may serve as a basis for helpful recommendations to the employee relative to his future work and other activities.

INFORMING THE WORKER

The physician should use every opportunity to advise the worker how to work safely with lead, answer questions about efects of lead, and allay unfounded fears. Where answers are not known these should be frankly reported to the worker. The doctor must maintain good credibility in order to establish a productive rapport. The worker should be encouraged to ask questions and discuss symptoms and signs with the plant physician if he has any concern about their relationship to industrial lead exposure. Appropriate investigations should be performed to determine if any relationship does exist. The plant doctor should help direct the worker to sources or proper medical attention for nonwork-related problems and cooperate in any way possible with the worker's own personal physician. The plant doctor should not treat long-term nonoccupational problems, but advise and guide. Occupational problems may be treated by the plant physician with the use of consultants as indicated. Good relationships with the worker's own personal physician will often prevent a hasty misdiagnosis of lead intoxication for what may be a simple case of increased lead absorption or a problem entirely unrelated to lead.

Blood lead and other biological data should be available to the worker only directly from the physician. This will enable the worker to receive the results with proper interpretation and dignity. The physician should openly discuss and explain his findings and recommendations to the employee or to anyone the employee may request. Where it is necessary to inform management or others of medical data obtained on an employee, this should be done with the employee's knowledge and consent. Only that data necessary to meet the immediate needs should be released.

INCREASED LEAD ABSORPTION WITHOUT SYMPTOMS

Careful biological and clinical monitoring will permit detection of workers who have excessive absorption and/or significant subclinical effects from lead. Causes for increased absorption should be sought and corrected. These may include attention to engineering, personal hygiene, change of work location ("sunshine crew"), personal protective equipment, identification and elimination of nonoccupational sources, modification of duration of exposure, as well as other factors. The number and extent of the approaches will vary with the findings.

Exposure should be reduced promptly when the concentration of lead in the blood as demonstrated by multiple analyses is at or in excess of 80 ug/100 g, particularly if there is evidence of a falling hemoglobin or other signs which do or may represent lead intoxication.

Individuals with increasing blood leads in the presence of persistently low urine leads may be at extra risk if this represents a decreased capacity of the kidneys to excrete lead. They should be monitored closely.

The continued placement of a worker in areas with exposure to lead should be based on the levels of exposure, the present and past blood leads, and other biological indices of lead absorption, other laboratory data, history of nonoccupational exposure to lead, and general clinical stuatus of the worker. The ultimate decision must rest with the physician.

EDTA MOBILIZATION TEST

Calcium disodium edetate (Versenate) is a drug that chelates lead. The chelated lead is readily excreted in the urine, most within the first six hours after Versenate administration. Systemically administered Versenate is the most effective treatment for lead poisoning.

Various investigators have suggested the administration of Versenate as a provocative test to assess the body burden of lead. Some have extended the concept to interpretation of excessive lead absorption on the basis of this test. Unfortunately, the

test is not well standardized from the standpoints of dose, concentration, method and duration of administration. Modifications of the test for use in renal disease other than an increase in urine collection time to four days have not been defined. The results of the test have not been adequately related to other biological indices of lead exposure.

Generally the test consists of the administration intravenously of about 1 gram of calcium disodium edetate in 250 to 500 cc of 5 percent p/w over a period of one hour. Urine collection is started with the institution of the IV drip and continued for the following 24 hours. The total amount of lead excreted is measured. If the amount exceeds 1 mg in 24 hours this is considered a positive test.

One investigator has suggested that the results of this test serve as a basis for returning individuals to work, recommending that the worker not be returned to lead exposure if excretion exceeds 2 mg of lead in 24 hours. The method of administration (2 grams of a 20 percent solution of Versenate intravenously) used by this investigator does not comply with the U.S. Food and Drug Administration approved administration guidelines for this drug in the United States. In the United States, the test has been recommended for use in children and adults as a guidleline to the need for further therapy and this is discussed further in the section on treatment.

A positive chelation test does not confirm lead poisoning. It simply indicates increased amounts of mobilizable lead in soft tissues and bone. The test may remain positive for long periods following removal from lead exposure. It is not useful in retrospectively determining past significant biological effects or clinical intoxication from lead. Care should be exercised in the administration of this test particularly in the presence of impaired renal function.

TREATMENT: CLINICAL LEAD POISONING

Workers diagnosed as having clinical lead poisoning (intoxication) should be removed completely from lead exposure during treatment. The type and extent of treatment may vary depending on the extent of illness and response to therapy. For individuals with only minimal findings removal from exposure and allowing the worker to excrete his lead spontaneously may be all that is indicated. One should be certain, of course, that the worker is adequately excreting lead in his urine since some individuals do not excrete lead well. Adequate diet and fluid hydration should be maintained. Any other intercurrent medical problems should be investigated and corrected.

Intestinal colic may be relieved by the slow IV administration of 10 cc of 10 percent calcium gluconate. It may be repeated in 4 hours. Cardiac rhythm must be monitored carefully.

The mainstay of specific treatment is parenteral Versenate (Calcium Disodium Edetate). Versenate is supplied as a sterile concentrated solution (20 percent) containing 200 mg of calcium edetate per mL for intravenous infusion or intramuscular injection. The generally preferred route for adults is by vein except in cases of encephalopathy which will be discussed later. The usual dose for an adult is 1 gram of Versenate diluted in 250 to 500 mL of isotonic sodium chloride, U.S.P. or sterile 5 percent dextrose solution in water. This is administered over a period of at least 1 hour. There is some suggestion from results in animals that increasing the time of administration up to 6 hours may be more beneficial than the 1-hour administration, especially for those individuals having more severe symptoms. Such doses may be administered twice daily for periods up to five days. If one is able to follow urine leads daily, there is little value in continuing the chelation therapy if less than 500 ug of lead per day is being excreted. Blood lead tends to re-equilibrate between soft tissue and bone lead, and the concentration of lead in the blood may rise after a rest of several days to a week or longer requiring a repeat course of treatment.

Lead encephalopathy is a relatively rare complication of lead poisoning in adults and with proper preventive measures should never occur. Nevertheless, should one be faced with a case of lead encephalopathy, consideration should be given to the combined use of BAL (British anti-lewisite, Dimercaprol) and Versenate although many cases have been treated successfully with EDTA alone. After urine flow is established, chelation therapy may be started with BAL and EDTA. EDTA is contraindicated during periods of anuria. Acutely ill individuals may be dehydrated from vomiting. Since calcium disodium edetate is excreted almost exclusively in the urine, it is very important to establish urine flow by intravenous infusion before the first dose of chelating agent is given. Once urine flow is established, further intravenous fluid is restricted to basal water and electrolyte requirements. Administration of calcium disodium edetate should be stopped whenever there is cessation of urine flow in order to avoid unduly high tissue levels of the drug.

BAL may be given in doses of 2.5 mg/kg by deep intramuscular injection. BAL usually is supplied in a 10 percent w/v solution with 20 percent benzyl benzoate in peanut oil with each cc containing 100 mg BAL. The dosage for calcium EDTA is 8.0 mg/kg per dose intramuscularly. For the first dose, BAL is injected alone. Beginning 4 hours later and every 4 hours thereafter, BAL and calcium EDTA are injected simultaneously at separate sites. The intramuscular route is preferred for the administration of EDTA in cases of lead encephalopathy. When given intramuscularly

it is best to dilute the 20 percent solution of EDTA with procaine added to give a concentration of 0.5 percent procaine (1 mL of 1 percent procaine solution for each mL of concentrated calcium disodium versenate solution, or crystalline procaine may be used to reduce volume). If significant clinical improvement has not occurred by the fourth day, the usual five-day course may be extended to seven days. Excess fluids must be avoided in patients with increased intracranial pressure.

Repeat blood lead and other studies should be done seven to fourteen days after treatment to be sure that further therapy is not indicated by increased blood leads or continued significant alteration of other biological indices.

Medicinal iron should not be given concurrently with BAL due to the possible formation of a toxic BAL-iron complex.

Obstipation and constipation should be treated with appropriate dietary measures and standard medications.

Side effects have been observed occasionally in patients receiving EDTA therapy. These must be distinguished from effects of lead. They may include proteinuria, microscopic hematuria, large epithelial cells in the urinary sediment, hypercalcemia and fever. These untoward reactions are most frequently observed toward the end of the second or subsequent courses of therapy and call for immediate cessation of calcium EDTA administration. Evidence of renal impairment should be looked for during therapy by periodic blood urea nitrogen determinations and urinalyses. Other measurements which may be useful include serum electrolytes, calcium phosphorus, and alkaline phosphatase determinations. The patient should be monitored for irregularities of cardiac rhythm.

The safe use of Versenate has not been established with respect to possible adverse effects upon fetal development.

In the treatment of patients with encephalopathy, it is extremely important to maintain adequate renal flow or urine. Body temperature must be maintained at normal but not hypothermic levels. For quick control of seizures Valium may be used. Paraldehyde may be useful in maintaining control of seizures thereafter. During the acute phase one should not wait for frank seizures, but rather prevent their development with doses of paraldehyde given whenever there is a significant increase in muscle tone or muscle twitching. Barbiturates should be avoided during the acute phase because of the severely depressant amounts needed and even then they may be ineffectual.

PROPHYLACTIC MEASURES

Dietary Supplements--Vitamins, Iron, Milk, Calcium, and Pectates

There is some evidence to suggest that individuals in good nutritional balance have less problems handling lead than those individuals who are poorly nourished. This is similar to that observed in the handling of many other metals and potential intoxicants. No specific dietary deficiency or dietary supplements have been identified which would make a worker more susceptible or more resistant to increased absorption or effects of lead. The administration of dietary supplements to workmen such as acid beverages, milk, calcium, pectates, iron, or vitamin preparations is not recommended as specific prophylactic measures. They should be a part of an overall adequate diet.

The industrial physician may help in this matter by giving advice and instructions on proper nutrition and diet.

Cathartics

The regular administration of cathartic medication is not recommended, and though often resorted to by workmen should be discouraged. Constipation is a frequent human ailment and for workmen in the lead-using trades, it is especially disadvantageous since it delays the evacuation of the alimentary tract and may thereby promote the increased absorption of lead. To the degree that it may be caused by the absorption of lead, it should be dealt with by the control of exposure to lead, not by cathartics. To the degree that is due to other causes, such as carelessness and faulty diet, it should be dealt with by recognition and elimination of these factors. The physician in industry has an important advisory and educational function to perform in this as well as in other hygienic matters.

Oral Chelating Agents

The prophylactic use of oral EDTA, sometimes called "preventive therapy or preventive medicine" is strongly discouraged. Although there is no documentation that its use in this way causes significant medical problems, there is some question that it may solubilize and thereby promote the absorption of lead present in the GI tract. If this occurs, lead which may normally be excreted in the feces could be transported through the blood and eliminated via the kidneys. If there were dissociation of the lead-chelate complex in the blood, this could cause high blood leads and large amounts of metabolically active lead to pass through the kidneys with possible nephrotoxicity. The use of oral EDTA prophylactically may also mask the need for and/or discourage proper in-plant and personal preventive corrective measures.

Cuprimine (D-penicillamine or BB-dimethyl cysteine) is not approved by the Food and Drug Administration for the treatment or prophylaxis of lead absorption. It may only be used in the United States as an investigational new drug.

RETURN TO WORK WITH LEAD FOLLOWING REMOVAL

Workers who have been removed from exposure to lead because of unacceptable levels of absorption or clinical lead intoxication or other medical conditions, generally may be returned to their former occupation under the following circumstances: clinical findings and those factors which would preclude employment on an initial basis no longer exist; when the concentration of lead in the blood has diminished to a point at which it is consistently well within the safe range, i.e., less than 70 ug/100 g; and the worker will be returned to an area with acceptable levels of potential future exposure to lead. It is not necessary that the individual be kept out of work sufficiently long to return to those levels of lead in blood which are seen in the general population. There are references to an increased likelihood of a rapid return to dangerous levels of lead in blood in individuals who have had such levels in the past, particularly when the prior exposures have been over a long period resulting in substantial body burdens of lead. Nevertheless, when the levels are within the acceptable absorption range, the patient is doing well clinically and there is knowledge that exposures will be controlled, he may be returned to work. Careful clinical surveillance is indicated. For simple cases of increased lead absorption and those with minor clinical problems such as colic and even perhaps slight neuromuscular symptoms, return to work should be possible in two months or less. In some cases it may be possible to reduce this time to one month or even less if the previous exposures were of short duration.

The severity and duration of the exposures that were responsible for the excessive absorption of lead or toxicity are important factors in considering the return of a worker to his former occupation. Those individuals having high body burdens of lead are likely to return to dangerous levels of blood lead quite rapidly if placed in high lead exposure areas. The return to a safe work environment involves little or no risk, but if the environment is dangerous or only dubiously safe, the risk will have been multiplied by the previous experience.

Some individuals, for a variety of reasons, tend to show rapid increases of blood lead in spite of their being engaged in activities and work environments in which other workers do not show such rapid increases. Factors that may account for these differences include personal hygiene and personal protective habits, work practices, mucociliary clearance action in the lungs, the ability to excrete lead via the kidneys, and probably a number of other factors. Such individuals should be carefully evaluated

and if it is not possible for them to be adequately maintained at safe levels, consideration should be given to permanent removal from work with exposure to lead.

EXPOSURE CONTROL

Engineering

Engineering should be the principal means of controlling exposure to lead. A number of approaches may be used in combination including: isolation, enclosure, local exhaust ventilation, good plant design for ease and effectiveness of housekeeping, and procedures for material handling that avoid contamination of the workplace. Contaminated air which is exhausted should not be permitted to re-enter the plant, and exhausted dust and fumes should be captured so as not to contribute significantly to pollution of the atmosphere in the neighborhood.

Personal Protective Devices

Respirators--
The use of respirators is not recommended as a primary means of exposure control. It should be employed in the following circumstances only:

- during the time necessary to install engineering controls and institute work practices required to reduce excessive exposure;

- in work situations where engineering control methods and work practices are either technically not feasible or only feasible to an extent which is still insufficient to reduce the exposure to acceptable limits; and

- in emergencies or occasional brief exposures of a nonroutine nature.

Respirators should be selected from among those approved by the National Institute for Occupational Safety and Health, and a respiratory program consistent with the requirements of the Occupational Safety and Health Act should be instituted. Close monitoring is required to maintain effectiveness of the program.

Respirators designed for dusts will not prevent absorption of fumes. Where exposure is to lead fume, a fume respirator must be used. Where exposures are unusually high, a powered air-purifying positive pressure dust or fume respirator or a positive pressure supplied air respirator may be required. Individual workers should be medically assessed for their physical capability of using a respirator. Good fit is extremely important. Direct skin contact is needed. Facial hair should be removed as necessary. Special respirators may be required for workers with

extremely variant facial contours. The use of respirators should be only carried out within a very carefully designed and officially administered program. This would include care of the equipment, inspection, cleaning, maintenance, and replacement as well as decisions as to when, how, and which types of respirators will be used. The program must be established and controlled by trained and responsible personnel.

Clothing--
Street clothes should not be used in lead-contaminated areas. Special work clothing should be worn. Street clothes and soiled work clothes must not be stored in the same locker. Separate lockers should be provided.

Work clothing contaminated with lead dust should not be cleaned by blowing or shaking. When practical, work clothing should be vacuumed before removal. Contaminated clothing should be changed as often as necessary. Full or partial protective clothing should be used as indicated based on the exposures.

Work Practices and Procedures

- Adequate washing facilities must be provided and used by all workers. It is particularly important that workers wash carefully before eating and leaving for home.

- Lunchroom facilities must be separate from the lead-processing areas. Care should be taken that air and surfaces in the lunchroom are not contaminated with lead. Workers should wash before eating and, if possible, cover or change clothing.

- Shower facilities should be provided and be separate from lead-processing areas. A separation of the locker room for street clothing from that for work clothing by the shower room is most desirable, if possible.

- Dust suppression compounds or water should be used in dusty areas to minimize airborne dusts.

- Dry sweeping should be avoided. The use of vacuum sweeping and water washing where feasible is preferred.

- Smoking, eating, and drinking in lead-processing plants shall be prohibited except in specified "clean" areas. Smoking materials and foodstuffs should not be brought into the lead-processing areas. Smoking is particularly hazardous. It affords an opportunity for direct ingestion of lead from the hands or the cigarette. Particles of lead may be pyrolized and inhaled as a fume. A worker who is smoking cannot be wearing a respirator.

It is particularly important that workers not carry lead home with them. The quantities of lead that are handled in the plant are measured in tons. The amounts of lead with which we are concerned causing significant biological effects are measured in milligrams or even microgram quantities. The addition of 1 mg of lead per day to the diet of an experimental subject results in a gradual continued increase in the amount of lead in the body and increase in blood lead with no plateau ever being reached. There are approximately 454,000 milligrams in 1 pound of lead. Very little contamination and very little additional ingestion can easily result in significant increases in absorption and body burden of lead from non-airborne sources.

THRESHHOLD LIMIT VALUE (TLV)

The current threshhold limit value for inorganic lead is 0.2 mg Pb/m^3 air for an exposure during an 8-hour day, 40-hour week. NIOSH has recommended a reduction of this level to 0.15 mg Pb/m^3 of air. There is considerable question about the validity for the basis of this reduction.

No value has been set for a single brief exposure to lead. Based on the TLV, an excursion of three times the TLV may be used as a guide for an acceptable limit for short durations. This must be taken into account when calculating the compliance with the TLV.

Overtime may cause increased absorption by reducing the available time to excrete absorbed lead and also by increasing the magnitude of exposure.

☆ U.S. GOVERNMENT PRINTING OFFICE 1980 657-147/1042