THE DEVELOPMENT OF CRITERIA FOR FIREFIGHTERS' GLOVES

VOLUME II: GLOVE CRITERIA AND TEST METHODS

by

Gerard C. Coletta, Project Manager
Irving J. Arons
Louis E. Ashley
Arthur P. Drennan

ARTHUR D. LITTLE, INC.
CAMBRIDGE, MASSACHUSETTS 02140

Contract No. CDC-99-74-59
Project Officer
Jeff I. Kamin

U.S. Department of Health, Education, and Welfare
Public Health Service
Center for Disease Control
National Institute for Occupational Safety and Health
Division of Physical Sciences and Engineering
Cincinnati, Ohio 45202

February 1976

For sale by the Superintendent of Documents, U.S. Government
Printing Office, Washington, D.C. 20402

DISCLAIMER

The opinions, findings and conclusions expressed or implied in this report are those of Arthur D. Little, Inc. (ADL) and not necessarily those of the National Institute for Occupational Safety and Health (NIOSH). Mention of company or product names is not to be considered an endorsement by ADL or NIOSH.

DHEW (NIOSH) Publication No. 77-134-B

GENERAL DISCLAIMER

This document may be affected by one or more of the following statements

- **This document has been reproduced from the best copy furnished by the sponsoring agency. It is being released in the interest of making available as much information as possible.**
- **This document may contain data which exceeds the sheet parameters. It was furnished in this condition by the sponsoring agency and is the best copy available.**
- **This document may contain tone-on-tone or color graphs, charts and/or pictures which have been reproduced in black and white.**
- **This document is paginated as submitted by the original source.**
- **Portions of this document are not fully legible due to the historical nature of some of the material. However, it is the best reproduction available from the original submission.**

FOREWORD

The National Institute for Occupational Safety and Health (NIOSH) is responsible for helping to ensure that every person in the Nation has safe and healthful working conditions. To accomplish this end, the Institute engages in research on occupational safety and health problems including evaluation of hazards and the development of testing and performance requirements for personal protective equipment.

One of the many work hazards considered for investigation by the Institute is firefighting. At the present time, there are no comprehensive standards or other requirements available for use in the manufacturing, selecting and testing of firefighters' gloves. Thus, we are pleased to publish this initial research effort for recommended standards.

It should be noted that this research work is based on a specific contract scope of work. Further evaluation and validation of the criteria recommended in this document are necessary. The Division of Physical Sciences and Engineering has performed an initial evaluation of the performance criteria and test methods developed by the contractor. A copy of this evaluation report will be published by NIOSH in the near future.

John F. Finklea, MD

John F. Finklea, M.D.
Director, NIOSH

PREFACE

This report, which describes the development of criteria for firefighters' gloves, has been prepared in 2 volumes.

Volume I identifies glove requirements in detail and presents recommendations for both glove standards and a prototype glove system which will meet those standards. This has been accomplished through study of injury statistics, firefighting tasks, existing glove standards and gloves currently used by firefighters.

Volume II, contained herein, is a supporting technical document in 2 parts. Part I traces the quantitative development of the glove criteria which are summarized in the recommendations for glove standards in Volume I. Part II describes the test methods which were devised for validating the protective and other properties of firefighters' gloves.

Arthur D. Little, Inc., carried out this research assignment for the National Institute of Occupational Safety and Health (NIOSH) under the driection of Project Officer Jeff I. Kamin of the Engineering Branch, Division of Physical Sciences and Engineering. NIOSH, a research institute of the U.S. Department of Health, Education and Welfare, was created by the Occupational Safety and Health Act of 1970. As mandated by this act, NIOSH performs and sponsors research and develops criteria for recommended standards applicable to the problems of occupational safety and health.

The data collected in this and in subsequent investigations are intended to become the bases for safety standards which are needed to ensure that the personal protection requirements of firefighters are met.

THE DEVELOPMENT OF CRITERIA FOR FIREFIGHTERS' GLOVES

VOLUME II – PART I: GLOVE CRITERIA

TABLE OF CONTENTS – PART I

	Page
List of Tables	ix
List of Figures	x
I. INTRODUCTION	1
II. HAND PROTECTION REQUIREMENTS	2
A. RESISTANCE TO CUT	2
1. Firefighting Hazards	2
2. Skin Resistance to Cut	4
3. Glove Resistance to Cut	12
4. Performance of Currently-Used Gloves	14
5. Summary	16
B. RESISTANCE TO PUNCTURE	16
1. Firefighting Hazards	16
2. Skin Resistance to Puncture	17
3. Glove Resistance to Puncture	22
4. Performance of Currently-Used Gloves	24
5. Summary	24
C. RESISTANCE TO HEAT PENETRATION	24
1. Firefighting Hazards	24
2. Skin Resistance to Burn	28
3. Glove Resistance to Heat Penetration	31
4. Performance of Currently-Used Gloves	36
5. Summary	39
D. RESISTANCE TO "WET" HEAT PENETRATION	39
1. Firefighting Conditions	43
2. Skin Resistance to "Wet" Burn	43
3. Glove Resistance to "Wet" Heat Penetration	43
E. RESISTANCE TO COLD	43
1. Firefighting Conditions	43
2. Skin Resistance to Cold	43
3. Glove Resistance to Cold	44

TABLE OF CONTENTS – PART I (Continued)

	Page
II. HAND PROTECTION REQUIREMENTS (Continued)	
F. RESISTANCE TO ELECTRICITY	45
1. Firefighting Hazards	45
2. The Human Body's Resistance to Electricity	45
3. Glove Resistance to Electricity	47
4. Performance of Currently-Used Gloves	48
III. OTHER REQUIREMENTS	49
A. DEXTERITY	50
1. Firefighting Tasks	50
2. Glove Dexterity	50
3. Performance of Currently-Used Gloves	50
B. RESISTANCE TO LIQUIDS	52
1. Firefighting Hazards	52
2. Glove Resistance to Liquids	57
3. Performance of Currently-Used Gloves	58
C. COMFORT	58
1. Firefighting Conditions	58
2. Parameters Influencing Comfort	60
3. Glove Comfort	65
D. RESISTANCE TO FLAME	66
1. Firefighting Hazards	66
2. Material Resistance to Flame	66
3. Glove Resistance to Flame	67
4. Performance of Currently-Used Gloves	67
E. DURABILITY	71
1. Firefighting Conditions	71
2. Parameters Influencing Durability	71
3. Glove Durability	72

TABLE OF CONTENTS (Continued)

	Page
III. OTHER REQUIREMENTS (Continued)	
F. DRYING	73
1. Firefighting Conditions	73
2. Glove Drying	73
G. VISIBILITY	74
1. Parameters Influencing Visibility	74
2. Glove Visibility	74
IV. DESIGN CONSIDERATIONS	75
A. GLOVE SIZING	75
1. Problems Relating to Poor Fit	75
2. Industry Sizing Practices	76
3. Updated Anthropometry	78
4. Glove Sizing	80
B. WRIST CONSTRUCTION	83
1. Problems Relating to Wrist Constructions	83
2. Available Wrist Constructions	84
3. Purchasing Habits	86
4. Glove Wrist Construction	86
V. GLOVE CLASSIFICATIONS	88
VI. APPENDICES	90
A. GLOVES USED FOR PERFORMANCE TESTING	91
B. REFERENCES	95

LIST OF TABLES

Table No.		Page
1	Summary of Hand Protection Criteria	3
2	Criteria for Glove Resistance to Heat (Thermal Energy) Penetration	34
3	Data for Conversion to Skin Injury Thresholds	37
4	Electrical Resistance Test Results, Currently-Used Gloves	48
5	Summary of Other Criteria	49
6	Typical Manual Tasks Encountered in Firefighting	51
7	Dexterity Test Results, Currently-Used Gloves	53
8	Liquid Penetration Test Results, Currently-Used Gloves	59
9	Flame Resistance Test Results, Currently-Used Gloves	68
10	Anthropometric Data for Critical Hand Dimensions	82
11	Firefighters' Glove Classifications	89

LIST OF FIGURES

Figure No.		Page
1	Descriptions of Test Edges Used by NBS	7
2	NBS Human Skin Cut Data for Test Edges at 4 Pounds	8
3	NBS Human Skin Cut Data for Test Edges at 20 Pounds	9
4	NBS Human Skin Cut Data for Test Edges at 12 Pounds	10
5	Summary of Human Skin Cut Data for NBS Test Edges	11
6	Cut Resistance Test Results, Currently-Used Gloves	15
7	Dimensions of Nails Commonly Involved in Puncture Injuries	18
8	Average Force Required to Puncture Rigidly Supported Adult Human Skin	20
9	Puncture Resistance Test Results, Currently-Used Gloves	25
10	The Nature of a Firefighter's Thermal Exposure	27
11	Human Skin Tolerance Time to Absorbed Thermal Energy	30
12	Observed Skin Temperatures as a Function of Irradiance	32
13	Time-Temperature Thresholds at Which Skin Burn Occurs	33
14	Thermal Energy Penetration Test Results — "Hazardous" Radiant Energy Currently-Used Gloves	38
15	Thermal Energy Penetration Test Results — "Emergency" Radiant Energy Currently-Used Gloves	40
16	Glove Materials After Exposure to "Emergency" Radiant Energy	41
17	Thermal Energy Penetration Test Results — Conductive Energy, Currently-Used Gloves	42
18	Glove Materials After Flame Exposure	70
19	Glove Sizes Used by the Dress Glove Industry	79
20	Critical Hand Dimensions	81

I. INTRODUCTION

The qualitative requirements for firefighters' gloves have been summarized in Tables 7 and 8 of Volume I. These requirements describe an "ideal" glove or glove system. Although these requirements are subjective in nature, they provide a framework from which to develop the quantitative criteria needed for establishing the suitability of gloves used in firefighting.

This Part I of Volume II describes the step-by-step development of such performance criteria for the requirements which are amenable to measurement. These requirements are divided into two categories: 1) hand protection and 2) other functional requirements. In addition, two design considerations which have direct bearing on several of these requirements are discussed in depth. The results of this work comprise the bases from which in-depth standards for firefighters' gloves can be prepared.

II. HAND PROTECTION REQUIREMENTS

Since it is clear that firefighting techniques will not change in the near future, the burden of protecting hands and wrists, and thereby reducing or eliminating most injuries, lies primarily with the firefighters' gloves. Therefore, gloves must be constructed to ensure adequate levels of protection.

In establishing these levels of protection, it was necessary to choose a measurable parameter to quantify each hand protection requirement. Each parameter chosen correlates with both firefighting hazards and glove resistance to those hazards. Also, each parameter directly relates to a property of either glove materials or hand skin. For example, hand skin temperature was chosen as the parameter for specifying glove resistance to heat penetration. A glove must keep skin temperatures low enough so that burns will not occur.

The value of each parameter was initially set by the conditions necessary for the commencement of injury to the unprotected hand. Where warranted, however, this initial value was then modified to provide protection well above that offered by the resistance of the skin. Such protection levels were accepted as final glove criteria only if they were consistent with (but not necessarily equivalent to) the protection offered by gloves currently used by firefighters. This provided a "real world" comparison, since a few gloves do offer satisfactory protection against individual hazards.

Table 1 identifies the criteria developed. This table, adapted from Table 7 in Volume 1, also identifies those requirements for which criteria were not developed.

A. RESISTANCE TO CUT

Injury data presented in Volume I have clearly identified cuts and lacerations as the most frequently sustained fire scene injuries. They result from contacts with sharp edges on structural components, on furniture and fixtures, and in widespread debris. The grasping, pushing, pulling and lifting common to most firefighting tasks continually expose all of the hands and wrists to these hazards.

1. Firefighting Hazards

Of all the hazards encountered, broken glass is by far the most common. Edges on glass fragments can be very sharp with irregular, microscopic surfaces. Wounds occur while the firefighter is handling or impacted by broken windows and furniture, broken appliances and many other objects found in residential and industrial settings.

The second common hazard is sharp-edged metal. Sources for metal edges include heating and air conditioning ducts, furniture, light fixtures and some structural components. The increased use of steel and aluminum studding in dry wall constructions provides for additional hazards.

TABLE 1

SUMMARY OF HAND PROTECTION CRITERIA

Hand Protection Requirements	Criteria Developed	Comments
• **Mechanical injury – wound with broken skin**		
1. Cut, scratch or laceration	Yes	
2. Puncture (including splinters, animal bites and insect stings)	Yes	
3. Abrasion	No	No criteria were developed since, for gloves that are well-fitted, skin abrasion is rare.
• **Thermal injury – heat**		
1. Burn	Yes	
2. Scald (e.g., by live steam)	Yes	Scald is considered to be an extension of the criteria for protection against burns.
• **Thermal injury – cold**		
1. Frostbite and freezing	Yes	
• **Mechanical injury – wound without broken skin**		No criteria were developed since these injuries cannot be easily defended against by a functional glove.
1. Bruise or contusion	No	
2. Crush or pinch	No	
• **Chemical injury – poisoning (including skin disease or allergic reaction)**	No	These are considered to be preventable if a glove is resistant to the effects of liquids.
• **Chemical injury – burn**		
• **Electrical injury – burn (or electrocution)**	Yes	

Firefighters are also exposed to skin-cutting edges while attempting to extract victims from automobiles, collapsed buildings, and other fallen structures. Such contacts with sharp edges are often propagated by forces of several pounds.

2. Skin Resistance to Cut

The resistance of human skin to cut provides a guide in establishing the cut resistance needed in firefighters' gloves. Skin resistance is described in the following paragraphs.

a. Cut and Laceration Injuries

Both cuts and lacerations can be individually characterized:

- A cut is a slice into or through the skin by a smooth, sharp-edged object.
- A laceration is a tearing or ripping into or through the skin by a pointed or jagged-edged object.

However, these two injuries are not mutually exclusive; they can be considered together. For purposes of defining firefighters' injuries, a cut is the primary injury and is a "worst-case" laceration. As support for this approval, the National Bureau of Standards (NBS), a primary resource for physiological cut data, also does not differentiate between these two injuries,[1]

In addition, McGuire and Moore of NBS describe such mechanical skin injuries as falling in one of four categories:[2]

(1) Non-penetrating injuries that cause some pain and minor tissue damage. These injuries usually repair themselves quickly and do not leave permanent scars.

(2) Shallow injuries that penetrate the epidermis, but barely enter the dermis. These injuries may cause bleeding, but usually heal easily and do not leave permanent scars.

(3) Intermediate-depth injuries that penetrate the epidermis and dermis, but rarely enter the sub-dermis or underlying tissue. These injuries can cause severe bleeding and leave scars.

(4) Deep injuries that penetrate the epidermis, dermis, and subdermis and often result in mechanical injury to underlying organs.

The third category, intermediate-depth injuries, is considered to represent the severity of a large number of the cut (and laceration) injuries sustained by firefighters. These are injuries which require medical treatment and often result in lost time. Therefore, cut (and laceration) injury is defined as a penetration through the epidermis and underlying dermis – a depth of 2.0-2.5 mm (0.079-0.098 in.).[3,4]

b. Measurements of Skin Resistance to Cut

In the establishment of resistance levels of human skin to cut, two modes of injury must be considered. Slicing injuries sustained while the firefighter is grasping, pushing, pulling and lifting result from relatively slow or "static" contacts with edges. Less frequent injuries which result from guillotine-type impacts by falling objects or which involve quick-grab impacts on fire scene-hazards are best described as "dynamic" cuts.* Published data do differentiate between these two modes of injury; however, data for dynamic cut are sketchy and open to critical review.

(1) Static Cut Measurements. The work of Sorrells and Berger at the National Bureau of Standards (NBS) provided the primary experimental data describing skin resistance to cut under static conditions.[1,5] Their programs were designed to define sharp-edge injuries from toys and other consumer products. They determined the forces required to cut human (cadaver) skin with a variety of edges. Since they were concerned with all levels of injury from superficial bleeding to serious injury, their data were presented in terms of the percentage cut-through as a function of applied force. These percentages varied from 0 to 100, with the latter extreme representing complete slicing through both the epidermis and dermis.

Sorrels and Berger conducted their tests on skin samples attached to a semicircular aluminum mandrel revolved manually in a metal-turning lathe. Each test edge was brought into contact with the skin under a specified force, and the depth of cut in a single swipe was recorded. They concluded that two parameters determine the severity of a cut:

- The force developed between the skin and edge; and,
- The edge sharpness, as determined by radius and included angle.

Initially, they expected the relative velocity between the skin and the edge to be important. Therefore, with each of several force and edge combinations, the tangential velocity was

---

* Dynamic cut resistance was considered but then dropped as a glove requirement. However, this mode of injury is carried through a complete analysis in this report to establish the basis for its deletion.

varied from 2.5 cm/sec (1.0 in./sec) to 25.4 cm/sec (10.0 in./sec) and the cut depth recorded. However, no appreciable velocity effect was noted in this static range and all subsequent tests were conducted at 2.5 cm/sec.

The test edges used in these experiments are considered to be representative of many fire-scene hazards. They are described in Figure 1. Edge sharpness is determined by both a radius and an included angle. Edge A, with the smallest apparent radius and a 60° included angle, represents the worst case for this assemblage of edges.* With a force of only a 1.8 kg (4.0 lb), cut depths greater than 60% and as high as 100% were recorded, as shown in Figure 2. All sharp edges (0.00 mm radius) reach a 100% cut depth at a force of 9.1 kg (20.0 lb), as shown in Figure 3.

Edges C and D are sheared edges thought by NBS to represent the edges of broken metal strips. They were made from 0.15-cm (0.059-in.) metal sheet that had been cut with a high-quality shear. These edges were left with a rough burr or "wire edge." The forces to cut to a 100% depth were recorded at approximately 5.4 kg (12.0 lbs), as shown in Figure 4, and are greater than the forces required with the sharper edge A.

The Consumer Product Safety Commission has initially selected the 1.8-kg force required for 100% cut-through with edge A, the sharpest of sharp edges, and the 9.1-kg force required for 100% cut-through with edge F, the dullest of sharp edges, in defining its safety criteria for toys.[5] Edge A represents exposed edges and edge F represents edges which are unexposed, but may be contacted inadvertently.

Sorrells and Berger determined cut depth for each test edge at five force loadings: 1.8 kg, 3.6 kg, 5.4 kg, 7.3 kg, and 9.1 kg. The results of these tests have been rearranged from the original format of Figures 2, 3, and 4 to a format which more directly identifies cut severity in terms of edge geometry. This rearrangement is shown in Figure 5 as cut depth (each point represents the numerical average of the several original data points) versus edge radius, edge angle, and force. These data identify skin resistance to cut over a wide range of static conditions.

Rieser and Chabal, in their work relating to the safety of laminated glass, developed additional data on the forces required to cut human skin.[6] In their set of experiments, standard surgical blades were used as test edges which simulate the cutting edges found on glass fragments. The blades were installed in a linear cutting apparatus and brought into contact with human skin at a velocity of 1 cm/sec (0.4 in./sec). With this procedure, forces of 1 kg (2.2 lb) to 2.2 kg (4.9 lb) were needed to cut human skin to a depth of 0.48 cm

*Edges A, B, E, and F are described by NBS as having radii of 0.00 mm (0.000 in.). This arose from a difficulty in measuring radii of less than 0.05 mm (0.002 in.). This measurement problem was borne out by a profilimeter check of edge F which revealed a radius of 0.025 mm (0.001 in.).

Edge	Edge Included Angle, α degrees, radians	Edge Radius	Edge Preparation
A	60°, $\pi/3$	.000"	Ground
B	90°, $\pi/2$	.000"	Ground
C	–	–	Sheared
D	–	–	Sheared
E	105°, $7\pi/12$	.000"	Ground
F	90°	.000"	Ground
G	15°, $\pi/12$	.002"(.05 mm)	Ground
H	30°, $\pi/6$	.002"	Ground
I	60°	.002"	Ground
J	15°	.004"(.10 mm)	Ground
K	90°	.002"	Ground
L	90°	.004"	Ground
M	90°	.008"(.20 mm)	Ground

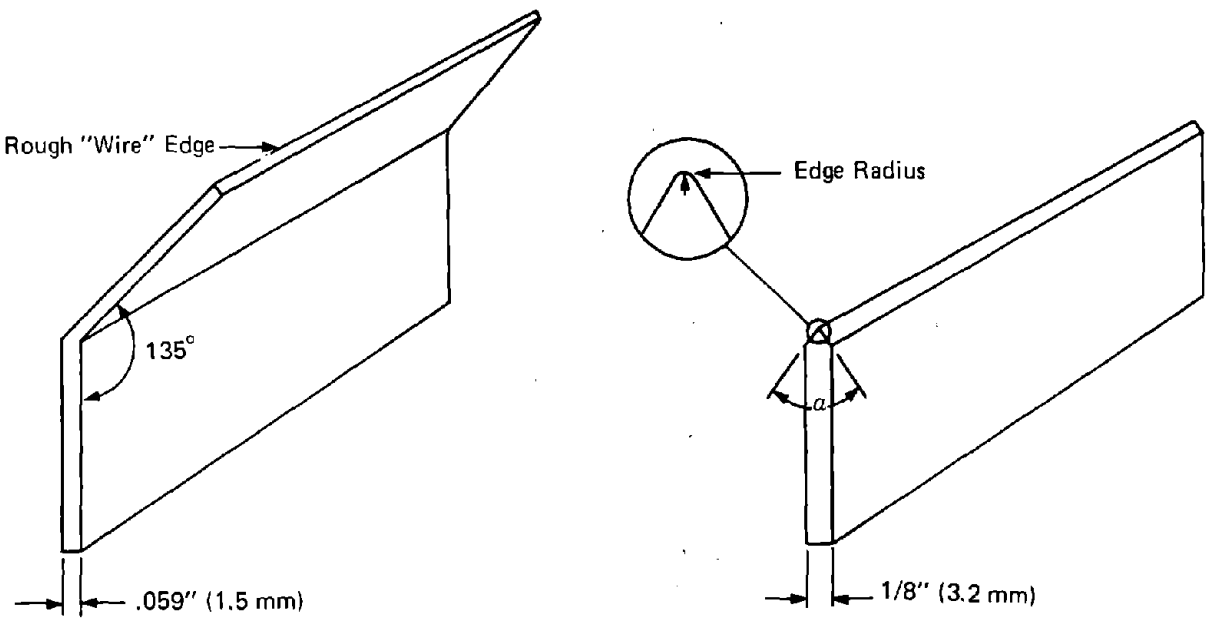

Typical Sheared Edge

Typical Ground Edge

FIGURE 1 DESCRIPTION OF TEST EDGES USED BY NBS

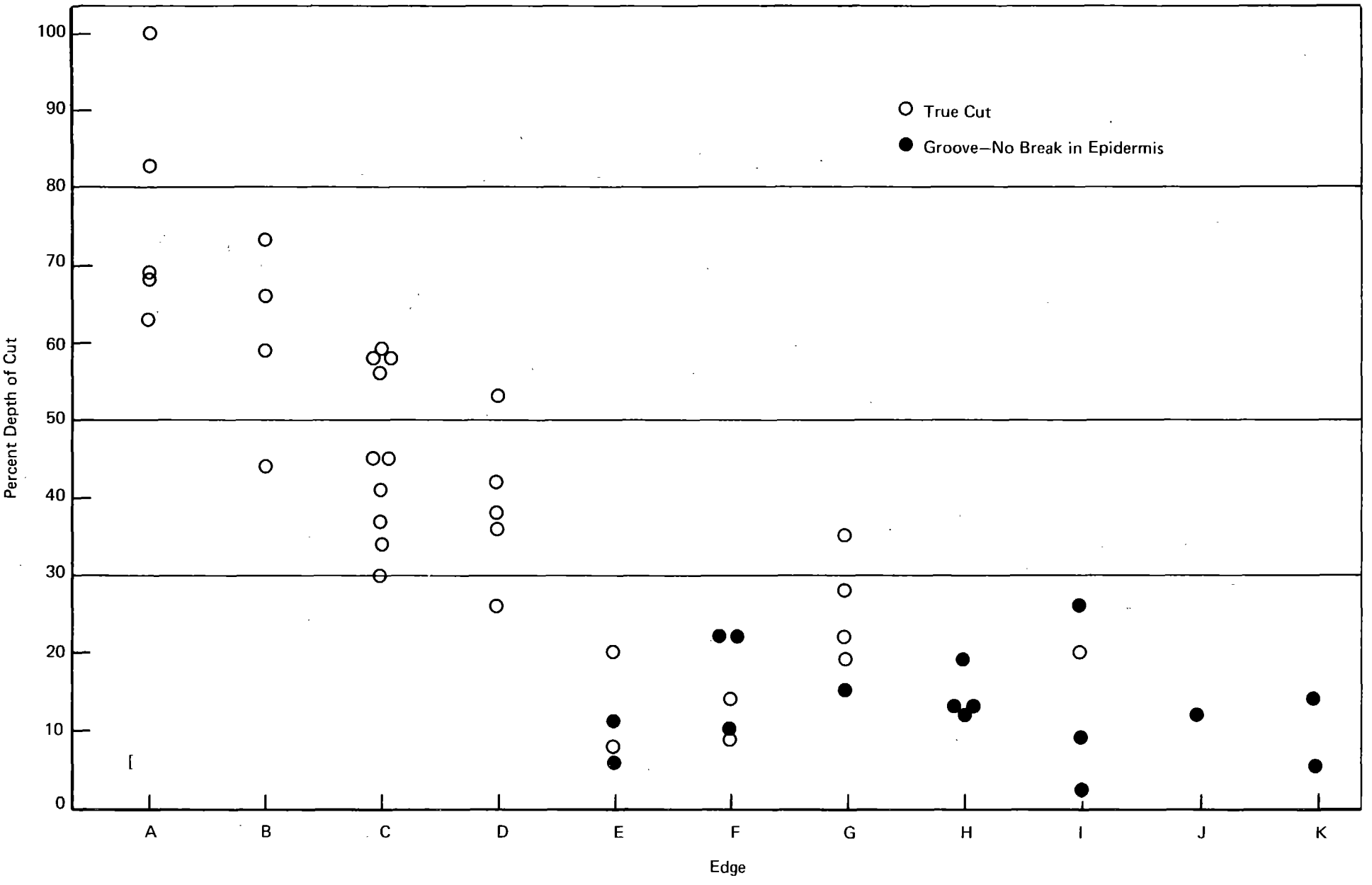

FIGURE 2 NBS HUMAN SKIN CUT DATA FOR TEST EDGES AT 4 POUNDS

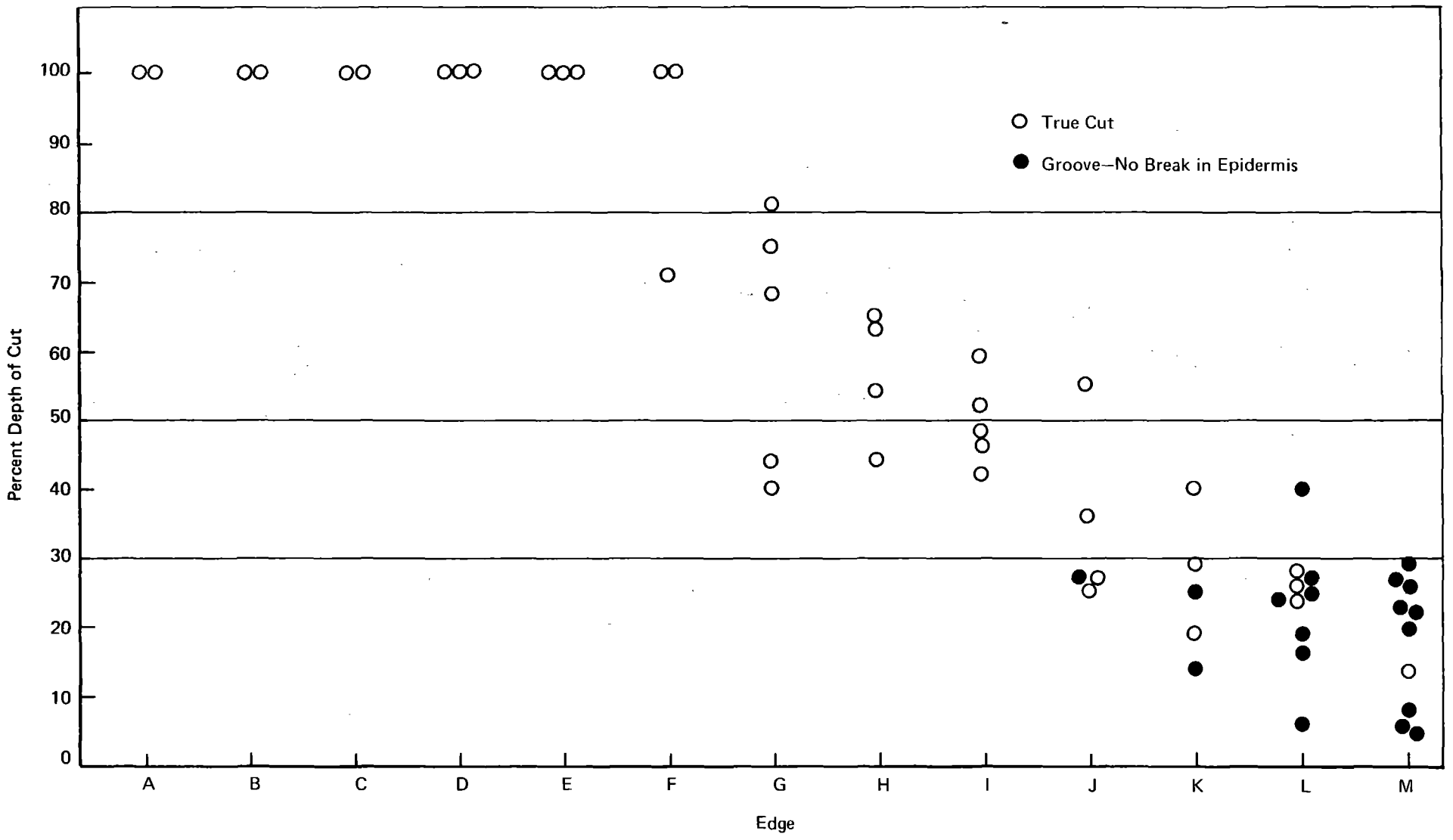

FIGURE 3 NBS HUMAN SKIN CUT DATA FOR TEST EDGES AT 20 POUNDS

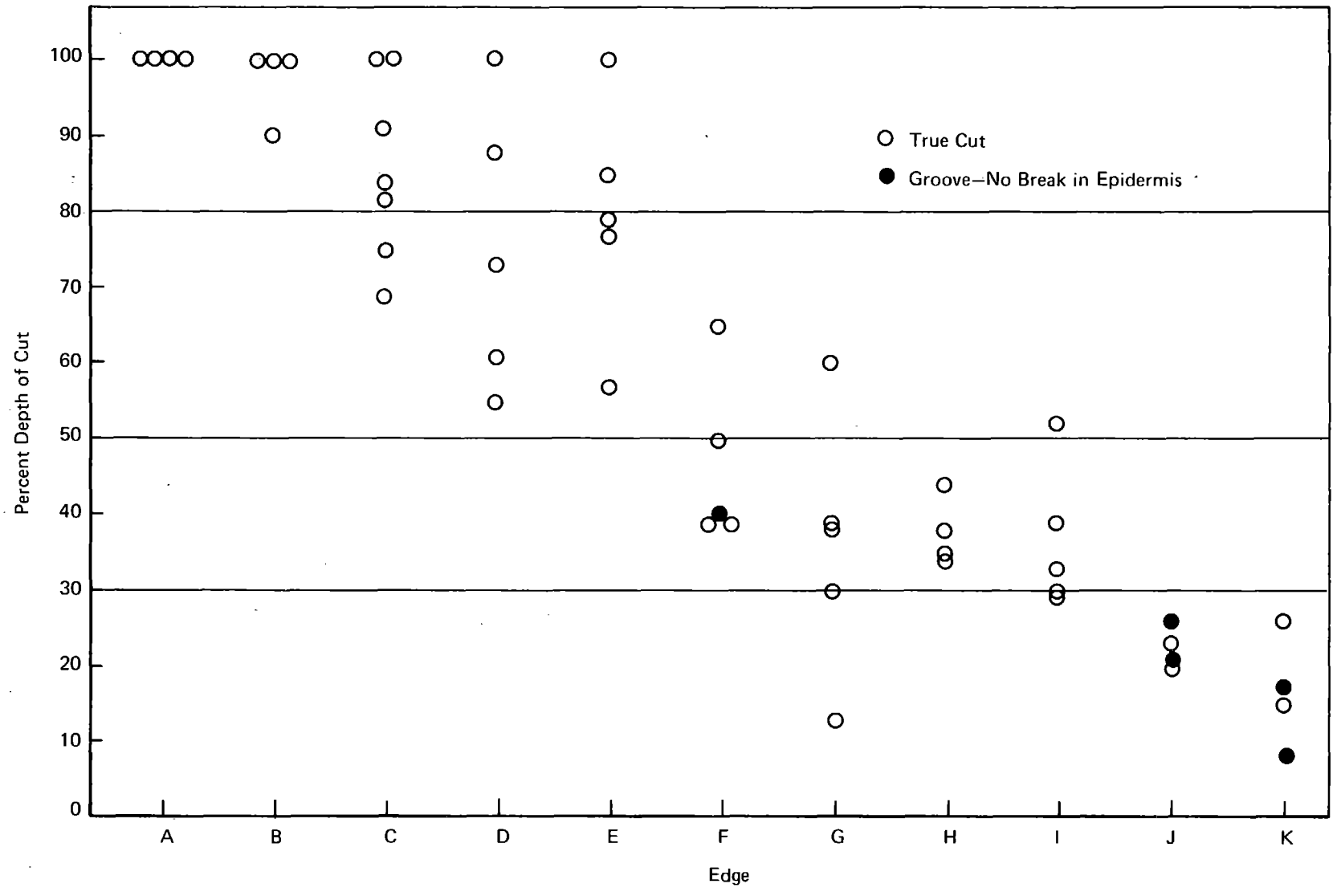

FIGURE 4 NBS HUMAN SKIN CUT DATA FOR TEST EDGES AT 12 POUNDS

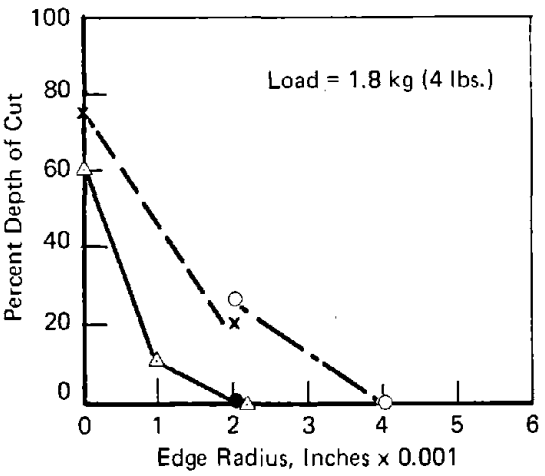

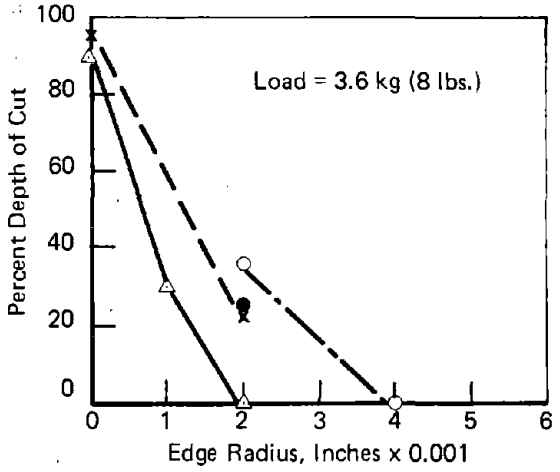

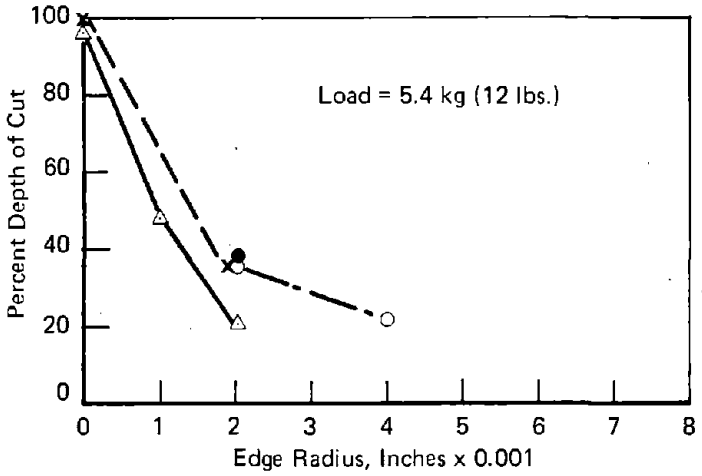

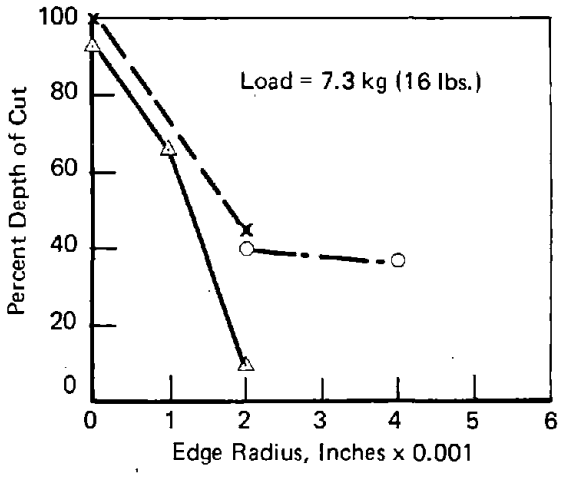

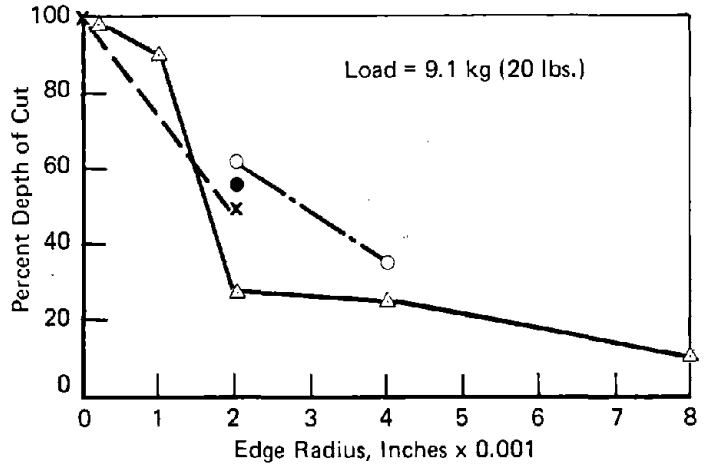

Legend:

○ = 15° Edge

● = 30° Edge

× = 60° Edge

△ = 90° Edge

FIGURE 5 SUMMARY OF HUMAN SKIN CUT DATA FOR NBS TEST EDGES

(3/16 in.). Although it was felt that surgical blades would duplicate glass edges, inspection of such blades indicates that this edge may be too severe. However, the forces recorded do confirm the data obtained for Sorrells' edge A.

(2) Dynamic Cut Measurements. There are differences between the loadings required to produce cut injury under dynamic conditions and those required under static conditions. However, few data are available for quantifying these differences.

Sorrells and Berger recommended impact loading tests be made to obtain data for high-velocity cut conditions. They felt many of the edges judged safe under static slicing motions could be hazardous und r dynamic, guillotine-type impact motions.

Rieser and Chabal obtained data for impact cut by simulating fragments of laminated safety glass as would be found in automobiles.[6] They ran dynamic tests using a modified IZOD impact testing apparatus. Standard surgical blades were again chosen to represent glass fragments and were attached to a pendulum traveling at about 3.3 m/sec (11 ft/sec) at impact with skin samples. In test, these blades enter a sample point first; the blade curvature is such that a scything action then takes place during cut. This test actually measures a combination of cut and puncture, not cut alone. Penetration energies (rather than penetration forces) of 0.09-0.31 kg-m (0.7-2.2 ft-lb) were recorded.

Gadd obtained similar results using both metal-edged and glass-edged impactors in a free-fall mode.[7] He used a 0.41-kg (0.9-lb) impactor traveling at 4.2-m/sec (13.9 ft/sec) to obtain skin cut. The test blade had a 5.1-cm (2.0-in.) long edge with a 90° included angle and a 0.40-mm (0.016-in.) radius. This combination represents an impact energy of 0.25 kg-m (1.8 ft-lb).

Gadd's data appear to provide the only estimates available describing skin resistance to guillotine-type impact. However, his test edge was too dull and his impact velocity somewhat high to be representative of most firefighting impacts.

3. Glove Resistance to Cut

Since a glove is used to protect a hand from injury, the outer materials should possess more than enough strength to resist surface cut at stress levels which would normally cut the skin. Therefore, once identified, the applied load required for complete skin penetration (100% cut-through) by a specified edge was increased to provide a margin of safety. Both dry and wet gloves should withstand exposure to this new combination of applied load and edge in order to provide a minimum acceptable level of protection.

Initially, two resistance levels were determined: one for static cut and one for dynamic cut. However, as described later, dynamic cut resistance was dropped as a performance requirement after a thorough review and some limited testing of gloves currently used by firefighters.

The validity of the quantitative value established for static cut resistance has been shown by a direct comparison with reported fire-scene performance of currently-used gloves. Several glove types have been judged by firefighters as adequate in providing fire-scene cut resistance, while others have been judged as inadequate. Comparable results have been demonstrated in characterizing these same glove types in terms of the new cut criteria established here.

a. Resistance to Static Cut

A blade with an edge having a 60° included angle and a 0.025-mm (0.001-in.) radius was chosen for use in specifying glove resistance to static cut. An approach of selecting the best-substantiated, worst-case condition for establishing glove resistance would have favored the selection of edge A. However, the uncertainties surrounding the radius measurement of edge A preclude its selection. Its performance suggests an edge which is very close to being feathered (having a true 0.00-mm radius). The use of such a feathered edge was not recommended since it is very susceptible to sharpness changes by gouging and microscopic distortion.[8] Standard surgical blades, which are manufactured to an included angle only, were also not recommended for this application which requires close control of edge dimensions.

Therefore, a more stable edge of 0.025-mm radius was chosen to provide edge durability and hazard reproducibility. Although this edge may not appear sharp enough to correspond to some glass edges, its ability to cut skin correlates with fire-scene hazards.

A review of the data in Figure 5 shows that a 3.6-kg (8.0-lb) applied force approximates the point of consistent epidermal and dermal penetration by an edge of this geometry. This applied force has been doubled to establish a cut stress with a proper margin of safety. Thus, it is expected that, as a minimum, the materials should resist single-swipe surface cut by this edge under an applied force of 7.2 kg (16.0 lb). The tangential velocity for single-swipe cutting is $\leqslant$2.5 cm/sec (60.0 in./min).

b. Resistance to Dynamic Cut

There are not sufficient data for firmly establishing glove resistance to dynamic cut by the identification of skin resistance. However, an estimate has been made to allow limited testing.

Rather than use Gadd's duller blade, a blade with an edge having a 60° included angle and a 0.025-mm (0.001-in.) radius was chosen for use in specifying glove resistance.

Gadd's energy level of 0.25 kg-m (1.8 ft-lb) represents the best data available for the initiation of cut under dynamic conditions. But based on the effects of sharper edges as shown in Figure 5, this resistance level has been halved to 0.12 kg-m. Then, by again following the doubling procedure for providing a safety margin, a glove resistance level of 0.25 kg-m was generated. Thus, it would be expected that as a minimum, the materials

should resist surface cut by the sharper blade under this applied energy. Free-fall impaction by a blade has been identified as the simplest technique for applying this energy to glove materials. The blade velocity at impact should be 1-5 m/sec (3.3-16.4 ft/sec) to duplicate quick-grab and impact velocities.[3]

The direct measurement of glove resistance in terms of energy is not a straightforward procedure. Simplification is provided by combining these energy considerations with several test method parameters. In Gadd's tests the entire impact energy was distributed over the 5.1-cm (2.0-in.) blade length. By converting to impact energy/unit length of blade and then using a shorter blade, the absolute value of the energy can be reduced. With a length of 0.32 cm (0.125 in.), the energy becomes 0.0156 kg-m (0.112 ft-lb, 1.34 in.-lb). This now specifies that the weight of the blade, multiplied by the distance of free-fall to impact, should equal this value. The free-fall height should be chosen so that the velocity at impact with glove materials is 1-5 m/sec.

Once the blade weight has been established, the performance criteria can be simplified even further to a statement of resistance in terms of free-fall height. For example, if a 0.20-kg (0.45-lb) penetrometer is used, a glove material should withstand a drop from 7.6 cm (~ 3.0 in.). The impact velocity corresponding to this height is 1.2 m/sec (4.0 ft/sec). Cut from drops at or less than this height would constitute insufficient resistance.

4. Performance of Currently-Used Gloves

Tests conducted on a sampling of gloves currently-used by firefighters have shown that several offer adequate cut resistance.* Figure 6 graphically shows the results of both static and dynamic cut testing. The data are reported as the percentage of the specified resistance levels actually achieved.

Canvas, leather, natural rubber-coated cotton and heavy neoprene-coated cotton were resistant to static cut. Except for canvas, these test results correlate well with the reported fire-service behavior of currently-used gloves. Leather and rubber are usually chosen for use where cut hazards are known to exist.

All gloves tested were able to meet the dynamic cut criteria. This, however, is most probably due to an inaccurate estimate of glove resistance, rather than to exceptional glove performance. After a review of both the criteria and these test results, dynamic cut was dropped as a performance requirement. This decision was based on four factors:

*Detailed descriptions of the test methods used are provided in Part II, Sections II-A and B of this report.

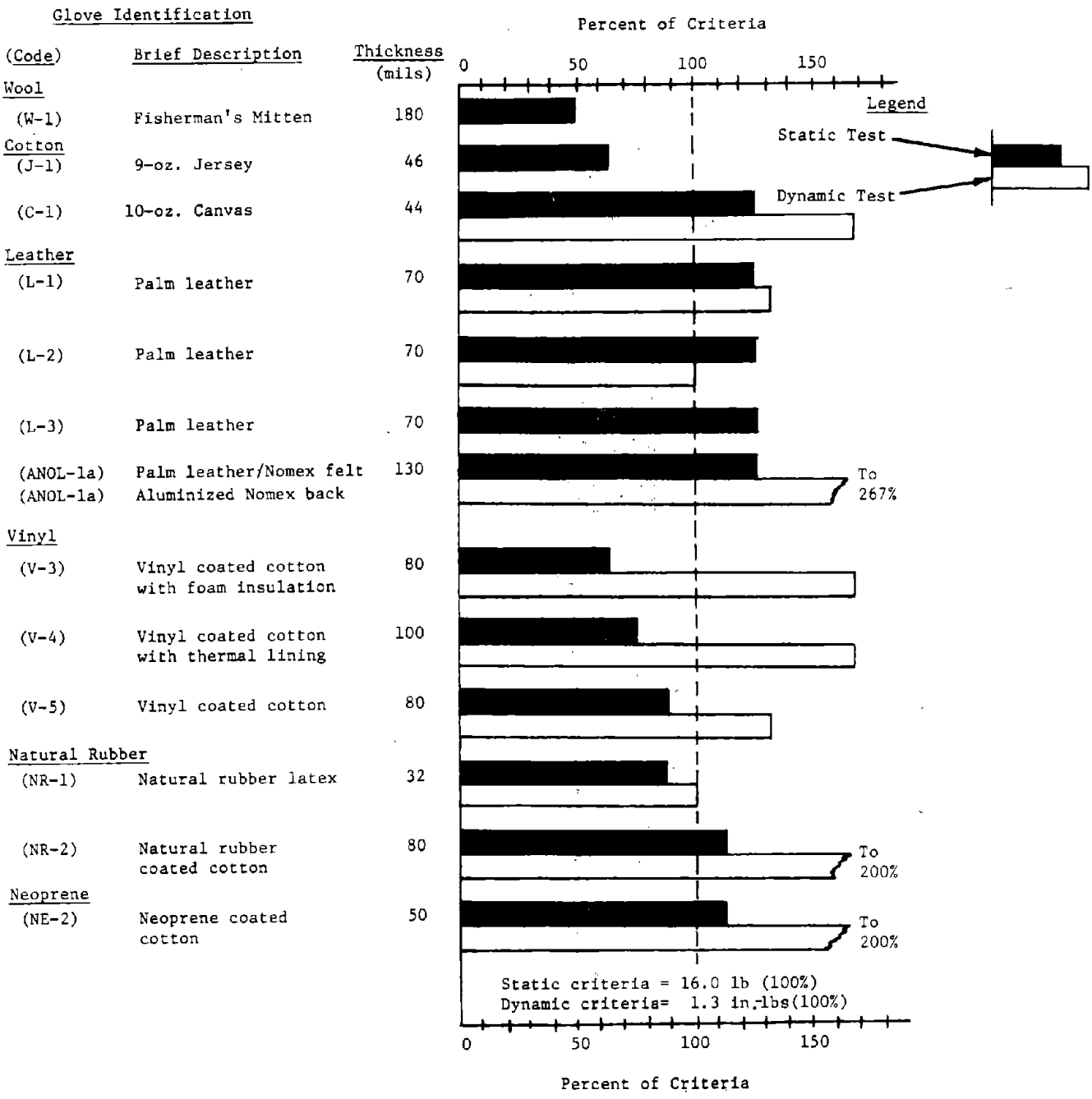

FIGURE 6 CUT RESISTANCE TEST RESULTS STATIC AND DYNAMIC CUT CURRENTLY-USED FIREFIGHTERS' GLOVES

- Dynamic cut injury occurs much less often than static cut injury.

- The previous estimate for glove resistance has little technical support.

- Since this injury occurs so infrequently, there is little fire-service experience to provide a guideline for refining an estimated glove resistance.

- Dynamic cut is a more difficult condition to test for than static cut. This is due to the extreme variation in the characteristics of accidents resulting in dynamic cut.

5. Summary

Materials used for the outer surfaces of firefighters' gloves should resist surface cut by a blade (1) with an edge having a 60° included angle and a 0.025-mm (0.001-in.) radius, (2) under an applied force of 7.2 kg (16 lbs), and (3) at a slicing velocity of $\leqslant$ 2.5 cm/sec (60 in./min). These criteria are applicable to all gloves exposed to fire-scene hazards and apply whether the outer glove materials are dry or wet.

B. RESISTANCE TO PUNCTURE

The second most frequent hand injury sustained by firefighters is puncture. Hazards that cause puncture injuries are found in and around all fires, but are most often encountered during the stripping of windows and doorways for access, in ventilating fires through a roof or a wall, and during overhaul when debris is handled. The majority of these injuries are inflicted on the palm and the palm side of the fingers.

1. Firefighting Hazards

A multitude of fire-scene hazards have been identified as potential causes of puncture injuries. Among these are:

- Nails, screws, and spikes;
- Splinters from lumber, wood furniture, wood fixtures, and wood ladders;
- Pointed tools such as screwdrivers, hooks, and pikes;
- Splintered glass and plastics;
- Chain-link fencing;
- Animal bites and insect stings (fauna);
- Thorns (flora); and,
- Debris that contains one or more of the above.

These hazards are often obscured by heavy smoke and generally poor visibility.

The most frequently encountered of these hazards are nails, screws, and glass fragments.* Nails are considered to be the "worst" case and therefore have been used as the basis for establishing glove resistance to puncture. The nails found most often in residential and light industrial structures are: 8d and 16d common, 6d and 8d finishing, and 4d lath.

2. Skin Resistance to Puncture

In the measurement of skin resistance to puncture, three parameters must be considered: the severity of a puncture injury, the physical dimensions of the puncturing instrument (in this case, nails), and the strength of the impact.

a. Puncture Injuries

McGuire and Moore's description of mechanical skin injuries (Section II-A) applies as well to puncture injuries.[2] Many puncture injuries sustained by firefighters fall into their third category – intermediate-depth injuries, which are severe enough to require medical treatment and which result in lost time. Puncture injuries are therefore defined as a penetration through the epidermis and underlying dermis.

b. Dimensions of Puncturing Instruments

Most of the skin puncture measurements described in published data have been made with conically shaped penetrometer tips. Even though nail tips are formed by a shearing action and have a pyramidal cross section, it is reasonable and preferable to represent them as conical in cross section. For this reason, each of the five nail types are characterized on the basis of the shaft diameter and the length, radius, and angle of the tip, as shown in Figure 7.

c. Measurements of Skin Resistance to Puncture

In carrying out their tasks, firefighters are exposed to puncture threats of varying strengths. Puncture wounds obtained while handling debris or stripping building structures are inflicted over relatively long times and can be represented by slow or "static" contacts with fire-scene hazards. Puncture wounds which result from falling materials or which involve quick-grab contacts with pointed objects are best described as "dynamic" contacts.

---

* Injuries attributed to glass are chiefly lacerative in nature and have been dealt with under glove resistance to cut and laceration.

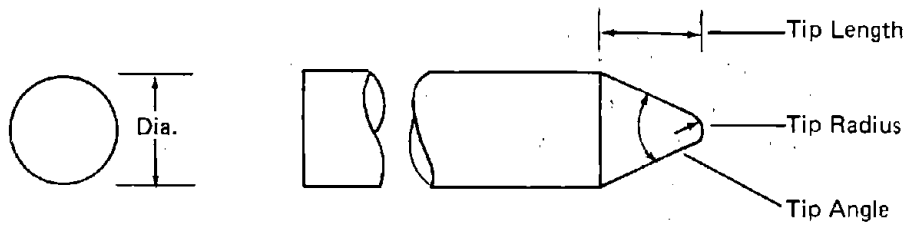

NAIL	TIP ANGLE (degrees)	SHAFT DIAMETER (mm)	(mils)	TIP RADIUS (mm)	(mils)	TIP LENGTH (mm)	(mils)
16d Common	48	4.06	159.8	.57	22.4	3.55	139.8
8d Common	38	3.22	126.8	.44	17.3	3.81	150.0
8d Finishing	50	2.43	95.7	.43	16.9	2.79	109.8
6d Finishing	45	2.38	93.7	.41	16.4	2.54	100.0
4d Lath Nail	26	2.03	79.9	.25	9.8	2.79	109.8

FIGURE 7 DIMENSIONS OF NAILS COMMONLY INVOLVED IN PUNCTURE INJURIES

In the establishment of resistance levels of human skin to puncture, both modes of injury must be considered.*

In the analysis of both static and dynamic contacts, the works of Moore, et. al., at the National Bureau of Standards (NBS), and Gadd, et. al., at the General Motors Research Laboratories (GM) were used extensively. These provide substantial data describing skin resistance to puncture. Moore's experiments were intended to determine the hazard potential of children's toys that have points.[2,3,9] The interests of Gadd centered on determining the hazard potential of broken glass and jagged metal edges occurring in automobile collisions.[7,10,11] Although hazards of this nature generally result in cuts and lacerations, Gadd conducted some experiments on skin puncture. Data from the works of Viljanto[4] and Tregear[12] relating to the mechanical properties of human skin (tensile, compressive and rupture strengths) were also useful in this analysis.

(1) Static Puncture Measurements. The penetrometer used by Moore for human (cadaver) skin puncture measurements employed a group of conically shaped tips (called Moore tips). These were made of steel drill rod 3.17 mm (0.125 in.) in diameter with radii varying from 0.05 mm (0.002 in.) to 0.8 mm (0.032 in.) and tip angles of 15, 30, 45, 60, 75, 90, and 120°. In addition to these conical tipped penetrometers, Moore use a modified spade-tipped penetrometer modeled after Gadd's at GM. This tip was 1.52 mm (0.060 in.) long, 0.25 mm (0.010 in.) wide and had a full radius of 0.13 mm (0.005 in.).

From his experiments with rigidly supported adult human skin and his penetrometer tips, Moore determined the average force required to cause puncture as a function of tip angle and tip radius. Penetrometer velocities were $\leqslant$ 0.85 cm/sec (20 in./min).

These data are plotted in Figure 8. Profiles (solid curves) are shown for two force loadings: 4.5 kg (9.9 lb) and 9.0 kg (19.9 lb). As might be expected, less force is necessary for puncture with small tip angles and small tip radii. Points representing tip angles and tip radii for the five nails described in Figure 7 have been added to this graph. Parallel (dotted) curves drawn through these points allow the forces needed to penetrate the human skin with each nail to be estimated:

Nail Type	Penetrating Force kg	Penetrating Force lb
16d common	~ 8.0	~ 17.6
8d common	~ 6.0	~ 13.2
8d finishing	~ 7.0	~ 15.4
6d finishing	~ 6.5	~ 14.3
4d lath	~ 3.0	~ 6.6

*Dynamic puncture resistance was considered but then dropped as a glove requirement. However, this mode of injury is carried through a complete analysis in this report to establish the basis for its deletion.

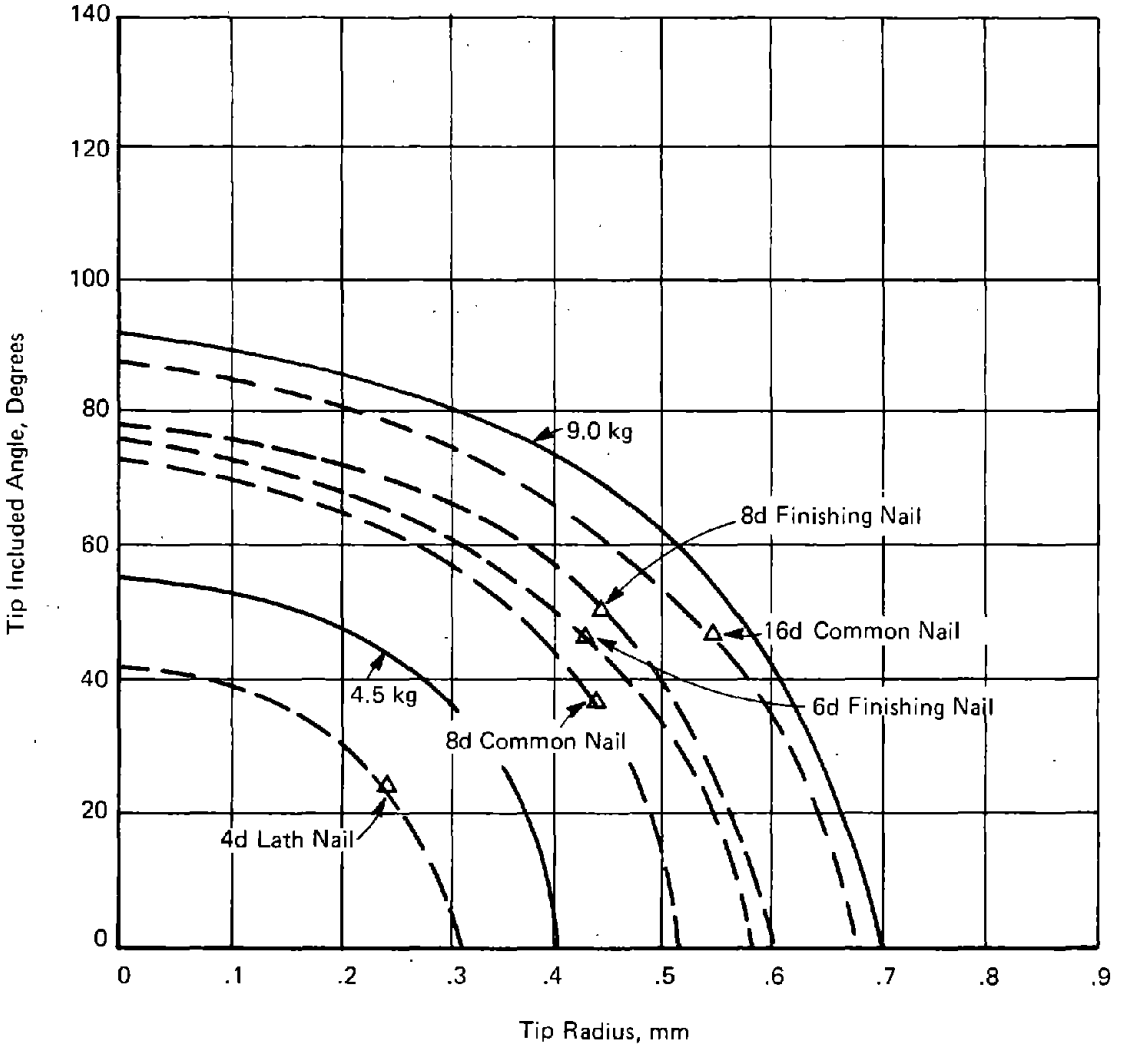

FIGURE 8 AVERAGE FORCE REQUIRED TO PUNCTURE RIGIDLY SUPPORTED ADULT HUMAN SKIN (WITH MOORE PENETROMETER TIPS) VS TIP ANGLE AND MOORE TIP RADIUS

These data also correlate with experimental results using the Gadd-type spade tip. Here, skin puncture occurred under forces of 6-8 kg.

Note that the shaft diameters of the nails are somewhat different from those of the Moore tips. The Moore tips have a smaller diameter than the 16d and 8d common nails. Since a smaller shaft diameter requires less force to puncture a material, the data shown for 16d and 8 d common nails are conservative. The data for the other three nails – 8d and 6d finishing and 4d lath – are also conservative even though these nails have smaller shaft diameters than the Moore tips. The reason for this is that the skin thickness used in obtaining the data was 1.5-2.0 mm (0.059-0.079 in.), whereas the skin thickness on the hands is on the order of 3.0 mm (0.118 in.). The values estimated from Figure 8, using these three nails and thinner skin, represent more severe damage since it requires greater force to puncture thicker skin.

(2) Dynamic Puncture Measurements. Attempts at making dynamic puncture measurements of skin have not been as successful as static puncture measurements. Both Moore and Gadd have indicated that the loadings necessary for dynamic puncture could differ from those necessary for static penetration.

Moore's conclusion was a result of several inconclusive tests which were carried out on pigskin under impact loading. It was noted that pigskin was less resistant to puncture under low-velocity conditions than under high-velocity conditions. This observation was extended to predict the behavior of human skin. Two sets of experiments carried out by Gadd show some contradictory results. The first set consisted of measurements using a spade-shaped tip on both a static hand-held penetrometer and a dynamic 0.23-kg (0.51-lb) indenter impacted at 5.5 m/sec (18.0 ft/sec). Gadd obtained identical resistance values on pork skin, pork shoulder and sponge rubber covered with a polyvinyl chloride sheet. He concluded that there were virtually no differences in puncture resistance under static and dynamic conditions. This observation was also extended to predict the behavior of human skin. However, Gadd's second set of experiments included measurements of the tear and tensile strengths of human skin under both static and dynamic conditions. Here, he found significant differences among measurements made as a function of loading rate (a ratio of 2:3, static to dynamic). On this basis, Gadd changed his position and concluded that the resistance of human skin to accidental injury should be described in terms of both its static and dynamic properties.

Values for the dynamic resistance of human skin can be approximated by using tensile stress-strain relationships since the toughness of a material (which describes the energy of absorption for rupture under impact) can be correlated to the area under the stress-strain curve.

Viljanto and Tregear have published tensile strengths of 141-211 kg/cm^2 (2000-3000 lb/in.^{2}) with accompanying elongations (strains) to rupture of 30-47%. Gadd obtained values of 141 kg/cm^2 (2000 lb/in.^{2}) at elongations of about 50% for static conditions and 198 kg/cm^2 (2800 lb/in.^{2}) at elongations of about 65% for dynamic conditions. Data presented by Moore on *in-vitro* measurements parallel these results. He obtained breaking forces of 20-40 kg for skin strips 1 cm wide and 1.5 to 2.0 mm thick (this calculates to 114-229 kg/cm^2) taken from the abdomen, chest, sternum and scalp. Moore also obtained breaking forces of 60-65 kg for skin strips 1 cm wide and 3.0 to 3.5 mm thick (this calculates to 184-200 kg/cm^2) taken from the back. Values for total extension during these measurements were between 20 and 50%.

These stress-strain data were used to estimate the total energy (rather than a force) necessary for dynamic tensile skin rupture, and therefore puncture. These estimates were 9-11 kg-m/cm^2 (417-500 ft-lb/in.^{2}). Because of the uncertainties demonstrated in actual puncture measurements, these energy values are considered the most appropriate in defining hand-skin resistance to dynamic puncture.

3. Glove Resistance to Puncture

Since a glove is used to protect the hand from injury, the materials used for the palm and palm side of the fingers should possess more than enough strength to resist puncture at stress levels which would normally puncture the skin. Therefore, once identified, the applied load required for complete skin penetration (epidermis and dermis) by a specified penetrometer was increased in magnitude to provide a margin of safety. Both dry and wet gloves should withstand exposure to this new combination of applied load and penetrometer to provide a minimum acceptable level of protection.

Initially, two resistance levels were determined: one for static puncture and one for dynamic puncture. However, as described later, dynamic puncture resistance was dropped as a performance requirement after evaluating the results of in-depth testing of currently-used firefighters' gloves.

The validity of the quantitative value established for static puncture resistance has been shown by a direct comparison with reported fire-scene performance of currently-used gloves. Two glove types have been judged by firefighters as adequate in providing fire-scene puncture resistance, while other types have been judged as inadequate. Comparable results have been demonstrated in characterizing these same glove types in terms of the new puncture criteria established here.

a. Resistance to Static Puncture

A penetrometer with the dimensions of a 4d lath nail was chosen for use in establishing glove resistance to static puncture. This penetrometer has the sharpest tip – a 26° tip angle and a 0.25-mm (0.0098-in.) radius – and represents a worst-case hazard.

A review of Figure 8 shows that an applied force of 3.0 kg (6.6 lb) approximates the point of consistent epidermal and dermal penetration by a penetrometer of this geometry. This applied force has been doubled to establish a puncture stress with a proper margin of safety. Thus, it is expected that, as a minimum, the materials should resist puncture by the 4d penetrometer under an applied force of 6 kg (13.2 lb). The penetrometer velocity for puncture is $\leqslant$ 0.85 cm/sec (20 in./min).

b. Resistance to Dynamic Puncture

A penetrometer with the dimensions of a 4d lath nail was again chosen as a worst-case hazard for use in establishing glove resistance to dynamic puncture.

The best estimate for the initiation of skin penetration under dynamic conditions is the calculated energy of 9 kg-m/cm^2 (417 ft-lb/in.^{2}). This applied energy should be doubled to establish a puncture stress compatible with fire-scene hazards. Thus, it is expected that, as a minimum, the materials should resist puncture by the 4d penetrometer under an applied energy of 18 kg-m/cm^2 (834 ft-lb/in.^{2}).

Free-fall impaction by a penetrometer has been identified as the simplest technique for applying this energy to glove materials. The penetrometer velocity at impact should be 1-5 m/sec (3.3-16.4 ft/sec) to duplicate quick-grab velocities.[3]

The direct measurement of energy per unit area is not a straightforward procedure. Accordingly, the evaluation of glove materials for ability to meet dynamic puncture criteria is difficult if measured on this basis.

Simplification is provided by combining these energy considerations with several test method parameters. The cross-sectional area of the 4d penetrometer tip is known (0.0019 cm^2, 0.0003 in.^{2}); therefore, the energy per unit area of application can be converted to simple energy units: 0.0019 cm^2 x 18 kg-m/cm^2 = 0.034 kg-m (0.251 ft-lb, 3.017 in.-lb). That is, the weight of the penetrometer, multiplied by the distance of free-fall to impact, should equal this value. The free-fall height should be chosen so that the velocity at impact with glove materials is 1-5 m/sec.

Once the penetrometer weight has been established, the performance criteria can be simplified even further to a statement of resistance in terms of free-fall height. For example, if a 0.45-kg (1-lb) penetrometer is used, a glove material should withstand a drop from 7.6 cm ($\sim$ 3.0 in.). The impact velocity corresponding to this height is 1.2 m/sec (4.0 ft/sec). Puncture from drops at or less than this height would constitute insufficient resistance.

4. Performance of Currently-Used Gloves

Tests conducted on a sampling of gloves currently used by firefighters have shown that only a few offer adequate puncture resistance.* Figure 9 graphically shows the results of both static and dynamic puncture testing. The data are reported as the percentage of the specified resistance levels actually achieved.

Only two glove materials were able to approach or exceed the specified resistance levels: leather and a heavy neoprene-coated cotton. Such test results correlate well with the reported fire-service behavior of these currently used gloves. Leather is usually chosen for use where puncture hazards are known to exist.

Based on a review of these test results, dynamic puncture resistance has been dropped as a performance requirement. Gloves which provided adequate static puncture resistance also consistently provided adequate dynamic puncture resistance. Dynamic resistance, as the less firmly based condition, and as the more difficult condition to test for was therefore considered redundant.

5. Summary

Materials used for the palm and palm side of the fingers of firefighters' gloves should resist puncture by a penetrometer (1) simulating a 4d lath nail, (2) under an applied force of 6 kg (13.2 lb), and (3) at a velocity of $\leqslant$ 0.85 cm/sec (20 in./min). These criteria are applicable to all gloves exposed to fire-scene hazards and apply whether the outer glove materials are dry or wet.

C. RESISTANCE TO HEAT PENETRATION

Of all the hazards encountered by firefighters, heat (thermal energy) is the most complex and difficult to protect against. The resistance characteristics of materials commonly chosen for firefighters' gloves are inadequate in resisting all but the mildest thermal exposures.

1. Firefighting Hazards

The thermal hazards common to most, if not all, fires are:

(1) Open Flame
- Radiant energy (red or white heat)
- Convective energy (superheated air)

---

*Detailed descriptions of the test methods used are provided in Part II, Sections II-C and D of this report.

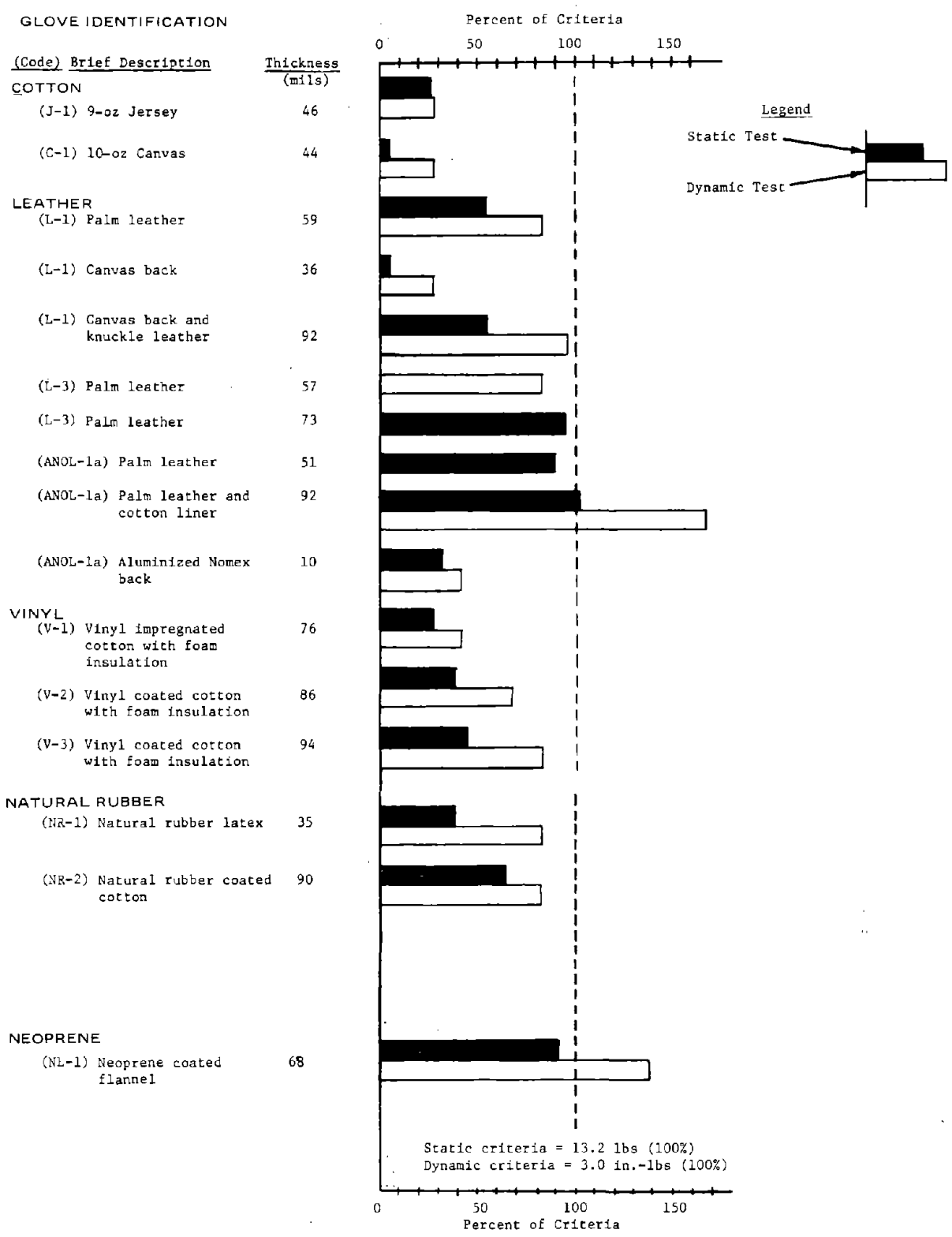

FIGURE 9 PUNCTURE RESISTANCE TEST RESULTS STATIC AND DYNAMIC PUNCTURE CURRENTLY-USED FIREFIGHTERS' GLOVES

(2) Falling Materials and Debris

- Dripping, burning tar, grease, paint and plastic
- Burning embers
- Melting insulation
- Hot runoff water and steam
- Burning chemicals (e.g., gasoline)
- Disintegrating, burning debris from walls, ceilings and stairways

(3) Hot Objects

- Mattresses and bed springs
- Ladders
- Ropes, wires and chains
- Pipelines
- Utensils and equipment, such as stoves, furnaces and appliances
- Doors, locks and stairway railings
- Glass
- Fire escapes
- Automobile and truck components

(4) Extraordinary Exposures

- Explosions
- Flashing or back-drafts

Without proper protection, thermal energy from each of these hazards can easily penetrate glove materials and cause hand burns. However, the most frequent causes of such injury are the radiant energy of open flame, the convective energy of superheated air and the conductive energy of grab-type contacts with hot objects.

a. Radiant and Convective Energies

Figure 10, adapted from references 13 and 14, defines the range of thermal conditions encountered by most firefighters. The fire environment contains a combination of radiant and convective energies, which are characterized by a radiant flux and an air temperature, respectively. Both modes of energy transfer can be combined and treated together. The combination can be then broken into three regions of increasing severity: "routine," "hazardous" and "emergency."

"Routine" exposures, applicable to firefighters who are operating hoses or otherwise fighting fires from a distance, last for 5 to 60 minutes with a maximum air temperature of 60°C (140°F) and a maximum radiant flux of 0.03 cal/cm^2-sec (399 Btu/ft^2-hr).

"Hazardous" exposures last for 5-20 minutes with a maximum air temperature of 300°C (572°F) and a maximum radiant flux of 0.2 cal/cm^2-sec (2660 Btu/ft^2-hr). The less severe conditions of the hazardous region are applicable to firefighters ventilating a fire

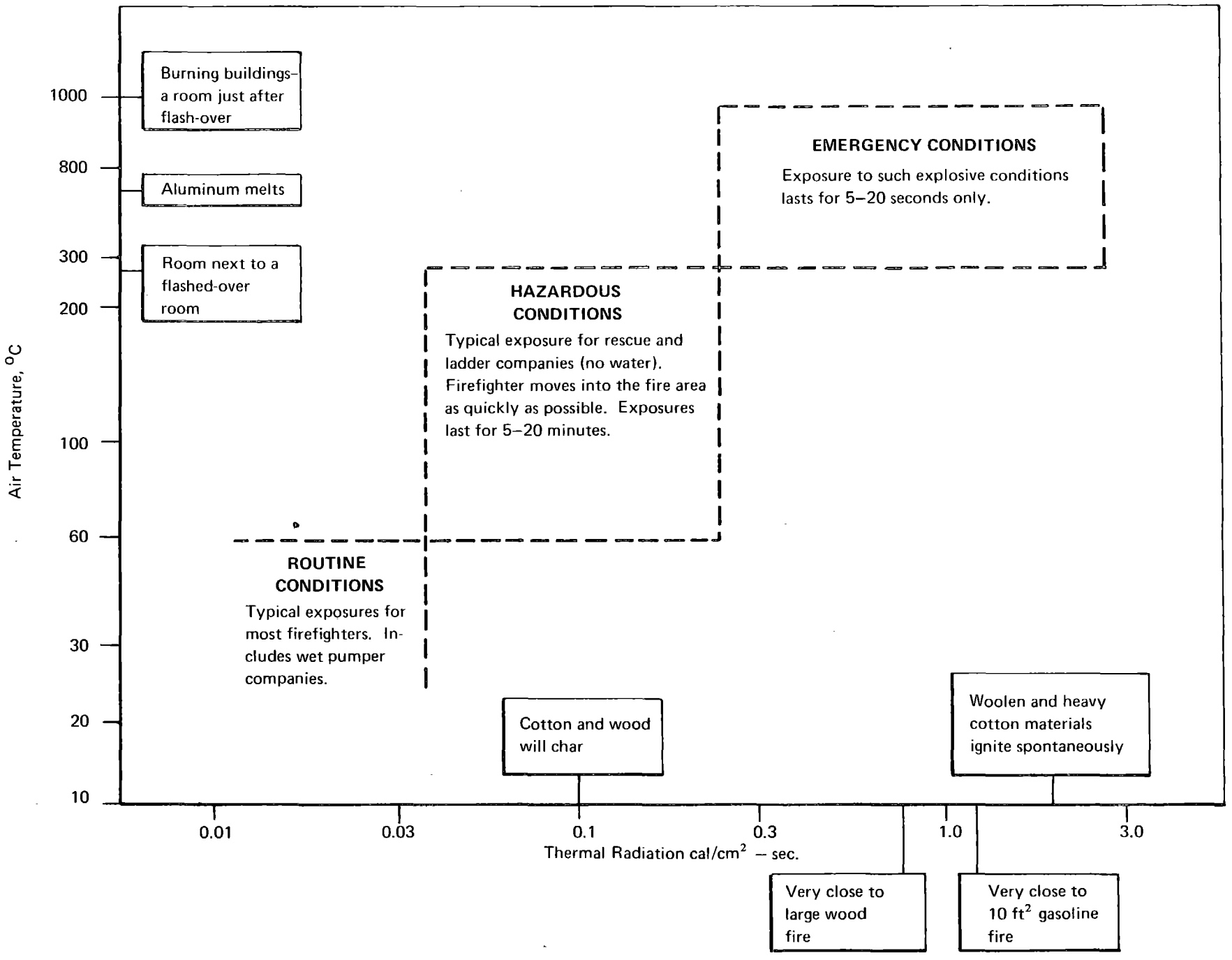

FIGURE 10 THE NATURE OF A FIREFIGHTER'S THERMAL EXPOSURE

without water support. The more severe conditions of the hazardous region are applicable to firefighters who are first into a burning building. Levels of intense thermal stress will be experienced under these conditions, but there will be little flammability problem with most protective clothing.

"Emergency" exposures last for 5 to 20 seconds with a maximum air temperature of 1000°C (1832°F) and a maximum radiant flux of 2.5 cal/cm^2-sec (33,192 Btu/ft^2-hr). Firefighters serving a rescue function can anticipate a possibility of exposure to flashing or back-drafts of such severity.

b. Conductive Energy

Conductive contacts occur when firefighters grab hot objects and debris during their work. Heat is conducted rapidly to a hand both because of the direct contact and because of the pressure exerted by a hand while it is grasping an object. Temperatures of 300-1000°C are typical of hazards causing burn by conduction. The time of hand contact with hot objects is 1-10 sec. Moreover, the overall conductive energy hazard could actually be more severe than that of a stable, open flame.

2. Skin Resistance to Burn

The thermal conditions required to burn human skin provided a basis for establishing the thermal energy penetration resistance needed in firefighters' gloves.

a. Burn Injuries

The literature describes three categories of skin burn, ranging from those causing minor levels of discomfort to those in which all skin layers are destroyed:[15,16]

- Minor first-degree burns occur at skin temperatures above the pain threshold and involve skin damage varying from light to severe erythema. These burns are reversible. The skin returns to its normal appearance within 24 hours.

- More severe, second-degree, burns range from mild skin damage with a few small blisters to severe skin damage with blisters over the entire surface within 24 hours. Second-degree burns result in rejection of injured tissue but not in destruction of the full skin thickness. A normal skin will return after a week or so.

- Severe, third-degree, burns involve all skin layers. They are full-depth burns which leave scars on healing unless special grafting techniques are employed.

The damage level of second-degree burns represents the severity of many injuries sustained by firefighters. Both the epidermis and dermis are involved in these injuries.

b. Measurements of Skin Resistance to Burn

The initiation and severity of skin burn have been found to be more a function of the rate of thermal energy input than of the total energy absorbed. This conclusion has been supported by extensive experimentation on human, pig and rat skin by three primary groups of researchers: Henriques and Moritz[17,18,19,20] of the Harvard University School of Medicine, Buettner[21,22,23] of the United States Air Force School of Aviation Medicine, and Stoll, Greene and Chianta[24,25,26,27] of the United States Naval Air Development Center.

Henriques and Moritz's work dealt mostly with injury from conductive energy; that of Buettner and of Stoll, Greene and Chianta was concerned with injury from radiant and convective energies. Furthermore, Stoll's publications have incorporated and refined the works of Henriques and Buettner. When properly normalized, the three sets of data agree and provide a strong technical base for identifying skin resistance to thermal stress.

(1) Radiant and Convective Energy Measurements. Stoll has identified the radiation intensities and exposure times required to produce both skin pain and second-degree tissue damage. These relationships are shown graphically in Figure 11. Stoll used experimental points obtained with skin specimens, along with calculated points based on the Henriques damage integral,* in preparing this figure.

---

*The work of Henriques[20] is classic in that he has established an equation, based on an Arrhenius-type relationship, for estimating skin damage. The assumption made by Henriques was that the reaction leading to thermal death of the epithelium (epidermis and dermis) conforms to that of most chemical and physical rate processes:

$$\frac{d\Omega}{dt} = P e^{\frac{-\Delta E}{R(T_t + 273)}}$$

where

$\frac{d\Omega}{dt}$ = the rate of change of Ω, a function describing injury

T_t = the temperature in degrees centigrade at the base tissue layer at time t in seconds.

R = the gas constant

and

P and ΔE are constants evaluated from the experimental data — ΔE being the activation energy for destruction.

Expressing this relationship as an integral, gives

$$\Omega = \int_o^t \frac{d\Omega}{dt}$$

where

Ω = 1 represents complete death of the epithelium

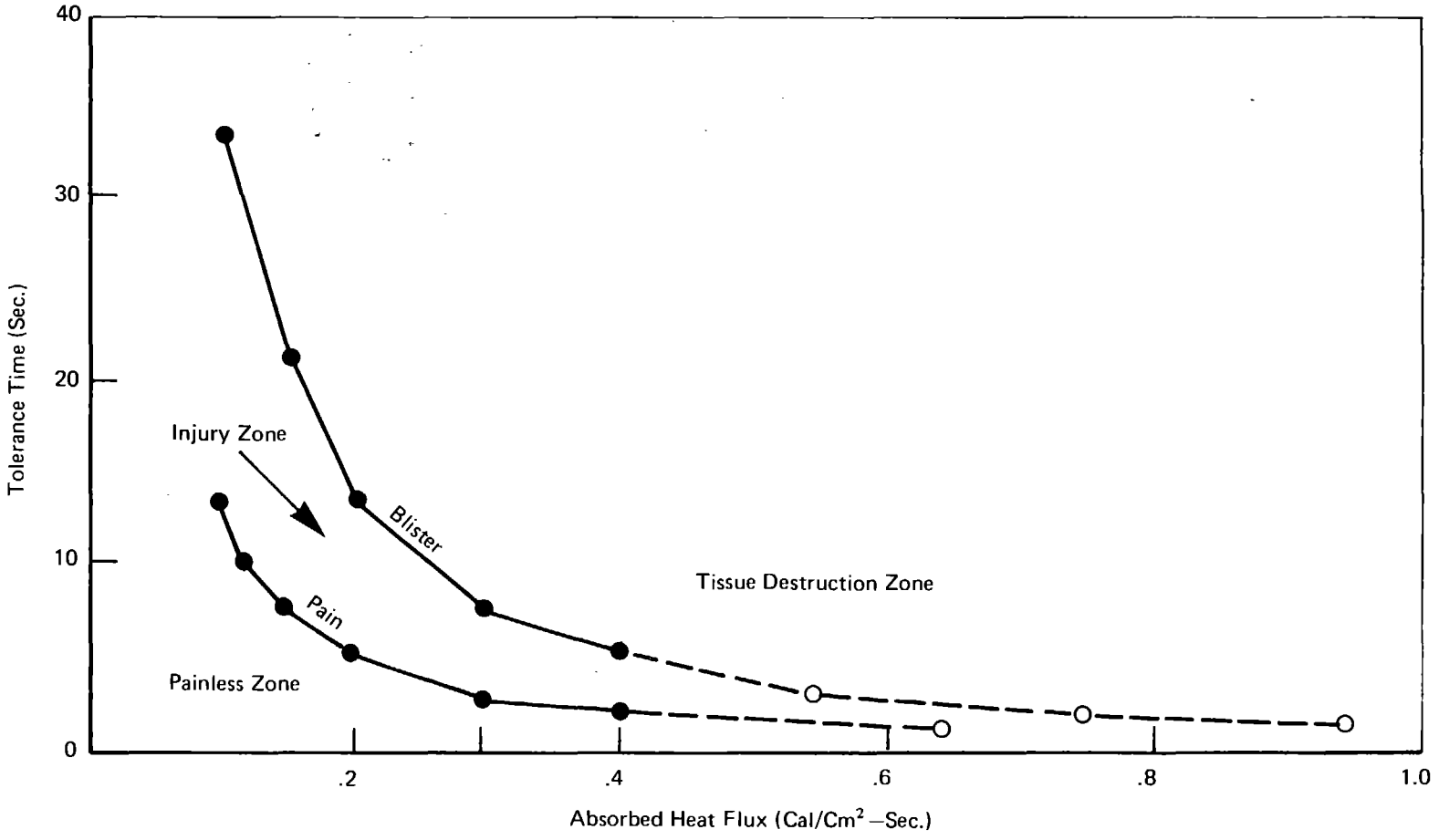

FIGURE 11 HUMAN SKIN TOLERANCE TIME TO ABSORBED THERMAL ENERGY DELIVERED IN A RECTANGULAR PULSE

This work has been extended to describe the actual skin temperature required for blistering to occur as a function of the radiation intensity and exposure time. These data are shown in Figure 12. The times shown in this figure were based on an initial skin temperature of 32.5°C (90°F). Should this initial temperature vary, the time to cause blistering at a given skin temperature will also vary. Moreover, Stoll has shown that the temperature/time relationship holds whether the thermal input is purely radiative, purely convective, or a combination of the two.

(2) Conductive Energy Measurements. Skin tolerances identified for radiant and convective energy exposures are also applicable to conductive energy exposures. The correlation of injury level with skin temperatures is independent of the energy source and the mechanism of energy transfer. This has been confirmed by additional work by Stoll.

Stoll also has summarized all of this work in a generalized relationship of skin temperature versus exposure time for injury. Irreversible second-degree burn begins when a threshold temperature of 44°C (111°F) is exceeded. The rate at which damage proceeds increases logarithmically with a linear increase in temperature; so at 50°C (122°F), damage occurs at a rate 100 times the rate at 44°C. Stoll also claims that complete epidermal destruction occurs instantaneously at 72°C (162°F).

On this basis, injury due to thermal energy can be delineated as occurring at any sustained skin temperature between 44 and 72°C. Figure 13 shows this relationship, as well as the relationship between skin temperature and reversible, first-degree burn.

3. Glove Resistance to Heat Penetration

Since a glove is used to protect the hand from injury, the materials should do more protect against second-degree burn. Therefore, the temperature/time combinations required for the less severe, reversible, first-degree burn have been chosen to provide a margin of safety and establish a minimum acceptable level of protection. Gloves are expected to possess enough insulation to keep the skin below the temperature/time combinations for first-degree burn when exposed to both radiant and conductive thermal energies. Table 2 and the following paragraphs explain these criteria in detail. In addition, the materials of construction should not burn, melt, or shrink when exposed to either energy type.

a. Resistance to Radiant and Convective Energies

Three classifications are recommended in defining glove resistance to radiant and convective energy penetration. The first classification is applicable to gloves used for general purpose work or by an engine company firefighter whose exposure normally consists of "Routine" radiant conditions. These are relatively mild and can be resisted by most glove materials now used. No specific performance requirements are necessary for these conditions. The second classification is applicable to gloves used by a ladder company firefighter whose exposure normally consists of "hazardous" radiant conditions. The third is applicable

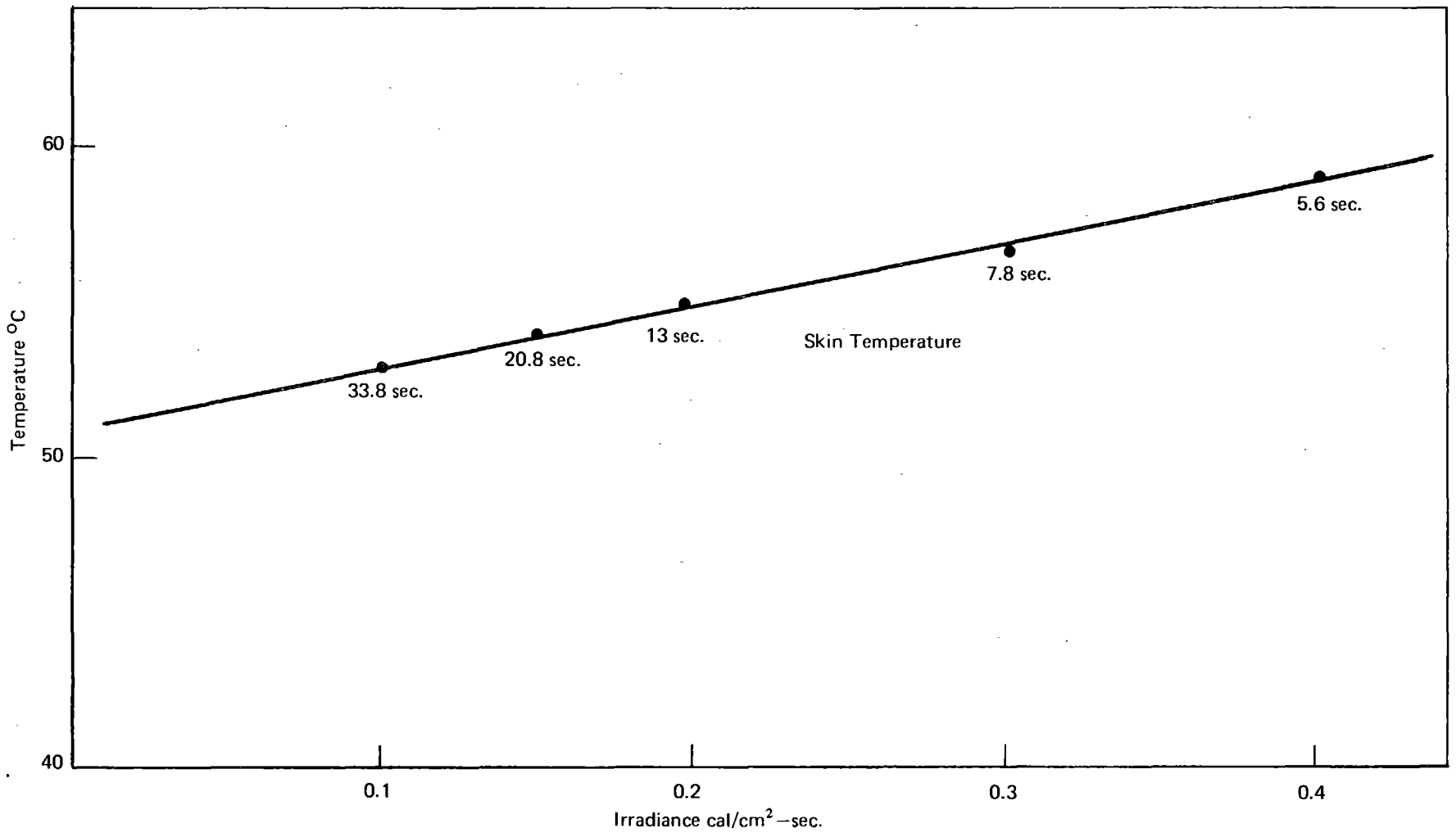

FIGURE 12 OBSERVED SKIN TEMPERATURES AS A FUNCTION OF IRRADIANCE FOR THRESHOLD BLISTER

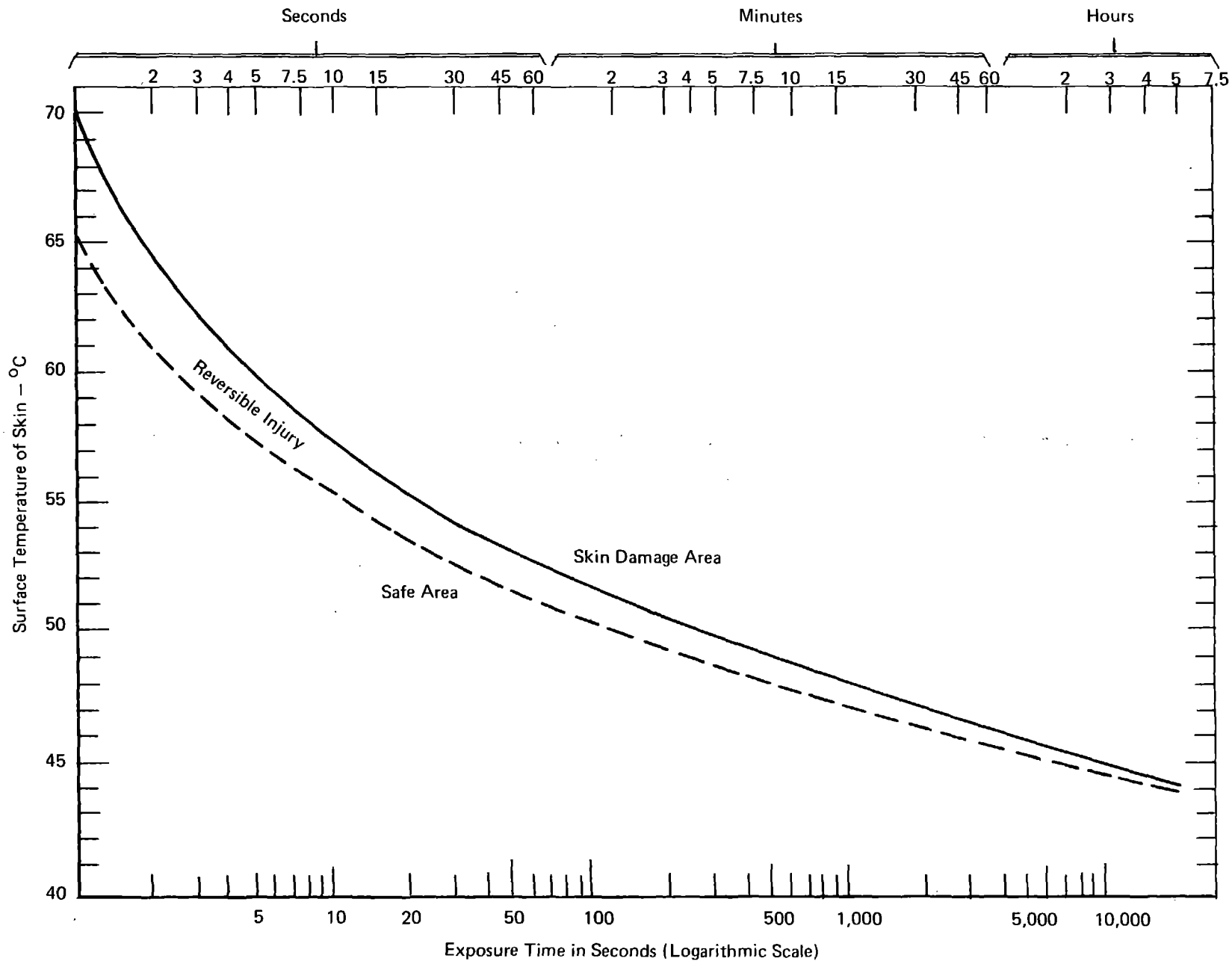

FIGURE 13 TIME-TEMPERATURE THRESHOLDS AT WHICH SKIN BURN OCCURS

TABLE 2
CRITERIA FOR GLOVE RESISTANCE TO HEAT (THERMAL ENERGY) PENETRATION

	ENGINE	LADDER	RESCUE
1. Hazards			
Radiant Energy			
Location		- - - - - Backs of hand and fingers - - - - -	
Flux		0.2 cal/cm^2-sec (2660 Btu/ft^2-hr)	2.5 cal/cm^2-sec (33,192 Btu/ft^2-hr)
Exposure time		10 minutes	10 minutes
Conductive Energy			
Location	- - - - - - - - - - Palm and palm side of fingers - - - - - - - - - -		
Temperature	500°C (932°F)	500°C (932°F)	500°C (932°F)
Contact pressure	4 psi	4 psi	4 psi
Contact time	5 seconds	5 seconds	5 seconds

2. Failure

Skin — Damage to the skin commences if the skin temperature rises and remains elevated, as described below:

Skin Temperature	Minimum Time Skin Must be at Specified Temperature for Injury to Commence (See Figure 13)
47.5°C	12 minutes
48.0	10 minutes
48.8	5 minutes
51.3	60 seconds
52.8	30 seconds
53.6	20 seconds
55.5	10 seconds
65.0	0

Glove Materials — Under the conditions described above, the temperature of a skin simulant behind glove materials must remain below skin injury temperatures noted in Figure 13.

to gloves used by a rescue company firefighter whose job requires first entry and therefore possible exposure to "emergency" radiant conditions.

(1) Ladder Company Firefighters' Gloves. These gloves should be constructed so that, as a minimum, the backs of the hand and fingers will protect against a "hazardous" radiant flux of 0.2 cal/cm^2-sec (2660 Btu/ft^2-hr) for 10 minutes.

(2) Rescue Company Firefighters' Gloves. These gloves should be constructed so that, as a minimum, the backs of the hand and fingers will protect against an "emergency" radiant flux of 2.5 cal/cm^2-sec (33,192 Btu/ft^2-hr) for 10 seconds.

Convective energy does not warrant individual attention – for either type of glove – because it is an inherent component of radiant energy exposures. Moreover, its rate of action is substantially less than that of radiant energy, so it has much less effect than radiant energy in the time frames of interest to the firefighter.

b. Resistance to Conductive Energy

Penetration of conductive energy during the handling of hot objects occurs under conditions of pressurized contact. Based on tests conducted at the U.S. Army Natick Laboratory, 4 psi has been identified as the maximum compressive pressure during grip.[28] Therefore, the palm and palm side of the fingers of all firefighters' gloves should protect against the conductive energy of a 4 psi, 5-sec contact with a metal object at 500°C (932°F).

c. Criteria Implementation

In the determination of the adequacy of glove materials in resisting both radiant and conductive energy penetration, performance must be measured in terms of skin temperatures during simulated firefighting exposures. If the skin reaches a temperature above 44°C and is maintained at or above that temperature for the time shown in Figure 13, injury will commence.

Under the assumption that the highest skin temperatures occur at the end of each thermal energy exposure, an injury threshold depicting the maximum permissible skin temperatures throughout the exposure can be prepared. This is done by reversing the time scale of Figure 13. For example, 0 seconds in Figure 13 represents the end of actual hand exposure. At no time should the skin temperature rise to 65°C. Ten seconds in Figure 13 represents 10 seconds before the termination of actual hand exposure. The skin temperature should not be sustained at or above 55.5°C for this entire period. Ten minutes in Figure 13 represents 10 minutes before the termination of actual hand exposure. The skin temperature should not be sustained at or above 48°C for this entire period.

An injury threshold for each of the radiant and conductive firefighting conditions has been established by following this procedure. The overall exposure times have been estimated to be:

- 10 minutes for exposure to a "hazardous" radiant flux plus 30 seconds for withdrawal from the energy source before gloves are removed (and during which energy continues to be transported through glove materials, even though actual exposure has terminated);

- 10 seconds for exposure to an "emergency" radiant flux plus 10 seconds for escape before gloves are removed; and,

- 5 seconds for conductive contact with a gripped, hot object.

Table 3 lists all of the data for converting Figure 13 to injury thresholds. The three resulting thresholds are plotted in Figures 14, 15, and 17. Materials are considered to offer adequate protection only if skin (or more properly, skin simulant) temperatures remain below these injury thresholds during exposures.

4. Performance of Currently-Used Gloves

Thermal energy penetration tests were carried out on a sampling of gloves currently used by firefighters.* All test results are reported graphically as skin simulant temperature versus time of exposure. The results of each test are compared to the appropriate injury threshold in order to establish the adequacy of protection provided. The data show that only two or three of the gloves used offer any thermal protection, and in these the protection is marginal at best. Moreover, this conclusion agrees with subjective evaluations from the Fire Services.

a. Resistance to Radiant Energy

Gloves were exposed to both "hazardous" and "emergency" radiant energies.

Figure 14 shows the resistance of eight glove constructions to "hazardous" levels of radiant energy. None of the tested gloves met the specified performance criteria. Only aluminized Nomex offered protection that was even close to being adequate.

Note that the actual test flux was 0.3 cal/cm^2-sec rather than the specified 0.2 cal/cm^2-sec. The pass-fail results are not expected to change significantly at the lower flux, however. The aluminized Nomex might meet the criteria, but all other constructions would still perform poorly.

---

*Detailed descriptions of the test methods used are provided in Part II, Section II-E of this report.

TABLE 3
DATA FOR CONVERSION TO SKIN INJURY THRESHOLDS

Energy Condition	Time Frame	Time Into Exposure	Time Remaining (See Figure 13)	Skin Temperature (See Figure 13)
"Hazardous" Radiant Energy @ 0.2 cal/cm^2-sec	Ten-Minute Exposure Plus Thirty Seconds For Withdrawal	0 min 30 sec	10 min 0 sec	48.0°C
		5 30	5 0	48.8
		9 30	0 60	51.3
		10 0	0 30	52.8
		10 10	0 20	53.6
		10 20	0 10	55.5
		10 30	0 0	65.0
"Emergency" Radiant Energy @ 2.5 cal/cm^2-sec	Ten-Second Exposure Plus Ten Seconds For Escape	1 sec	19 sec	53.6°C
		5	15	54.3
		10	10	55.5
		15	5	57.5
		18	2	61.5
		20	0	65.0
Conductive Energy @ 4 psi, 500°C	Five-Second Contact	1 sec	4 sec	58.2°C
		2	3	59.3
		3	2	61.5
		5	0	65.0

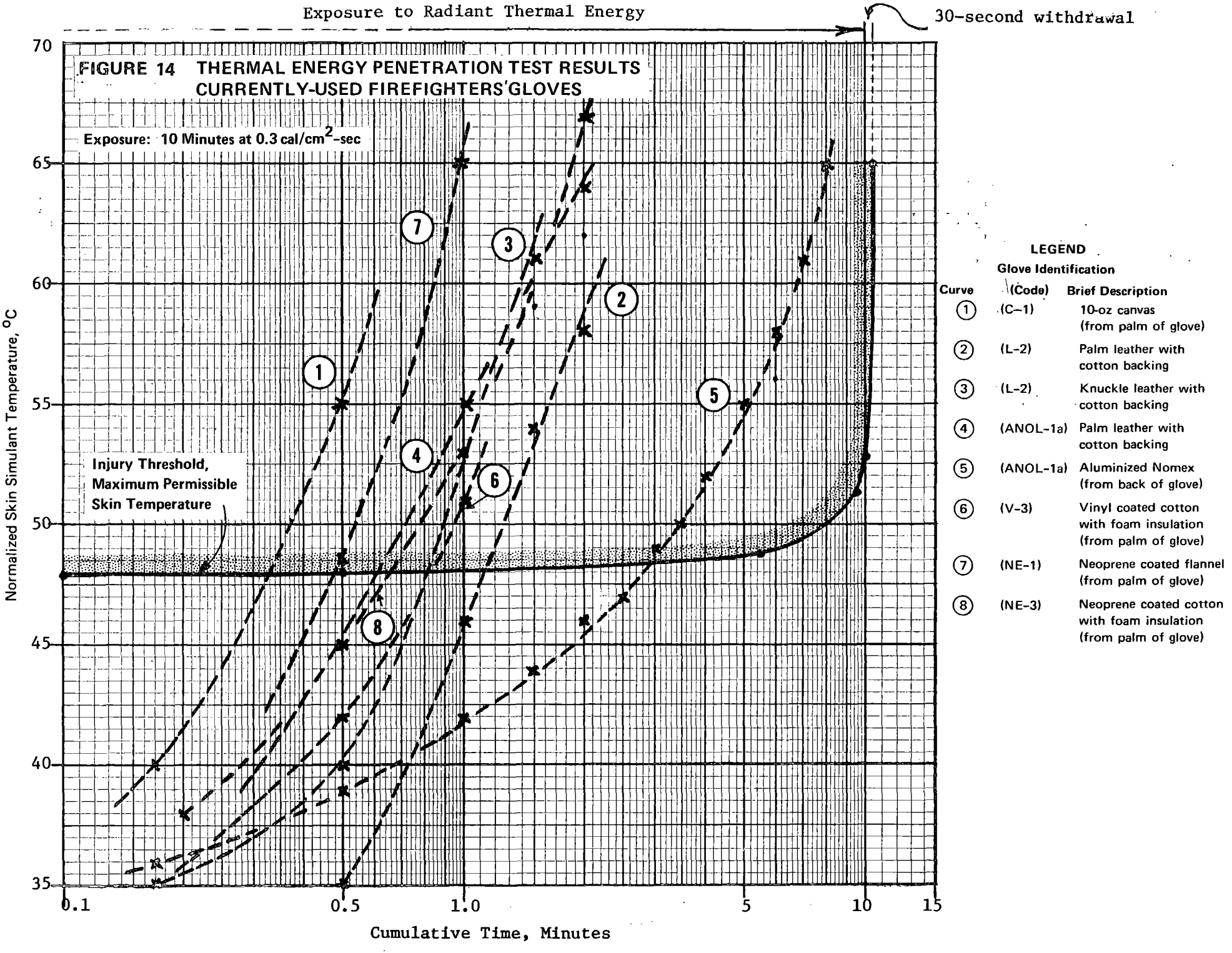

FIGURE 14 THERMAL ENERGY PENETRATION TEST RESULTS CURRENTLY-USED FIREFIGHTERS' GLOVES

Figure 15 describes the resistance of six glove constructions to "emergency" radiant energy. Aluminized Nomex and vinyl-coated cotton with foam insulation both provided sufficient protection during the specified 20-second period. However, as shown in Figure 16, the materials charred and blackened substantially. It appears that the high intensity of the energy degrades materials rapidly enough to overshadow the rate of energy penetration.

b. Resistance to Conductive Energy

The conductive energy tests were performed at 450-540°C under a contact pressure of 4 psi. A number of glove materials were able to withstand a 5-second exposure without allowing the skin simulant to reach threshold temperatures. Figure 17 identifies these materials as leather, vinyl-coated cotton with foam insulation and neoprene-coated cotton with foam insulation. The leather shrunk severely, while the vinyl and neoprene charred and blackened.

5. Summary

Firefighters' gloves should protect the hands from exposures to both radiant and conductive thermal energies.

Three levels of protection are necessary in defining the resistance to radiant energy. Gloves used by engine company firefighters should protect against relatively mild "routine" radiant exposures. Gloves used by ladder company firefighters should protect against a "hazardous" flux of 0.2 cal/cm^2-sec (2660 Btu/ft^2-hr) for a 10-minute exposure (plus 30 seconds for withdrawal). Gloves used by rescue company firefighters should protect against an "emergency" flux of 2.5 cal/cm^2-sec (33,192 Btu/ft^2-hr) for a 10-second exposure (plus 10 seconds for escape).

All firefighters' gloves should protect against 500°C (932°F), 5-second, 4-psi conductive energy contacts with hot objects.

Radiant energy protection should be placed primarily in the backs of the hand and fingers; conductive energy protection should be placed primarily in the palm and palm side of the fingers. The materials of construction should show no visible evidence of burning, melting or shrinking under these exposures.

D. RESISTANCE TO "WET" HEAT PENETRATION

Burns caused by heat (thermal energy) penetration through a glove can be intensified by the presence of water inside the glove. Such "wet" burn or scald can occur with any glove that provides insufficient thermal insulation and that allows water to penetrate to the inside. These are hazards of particular significance in firefighting conditions.

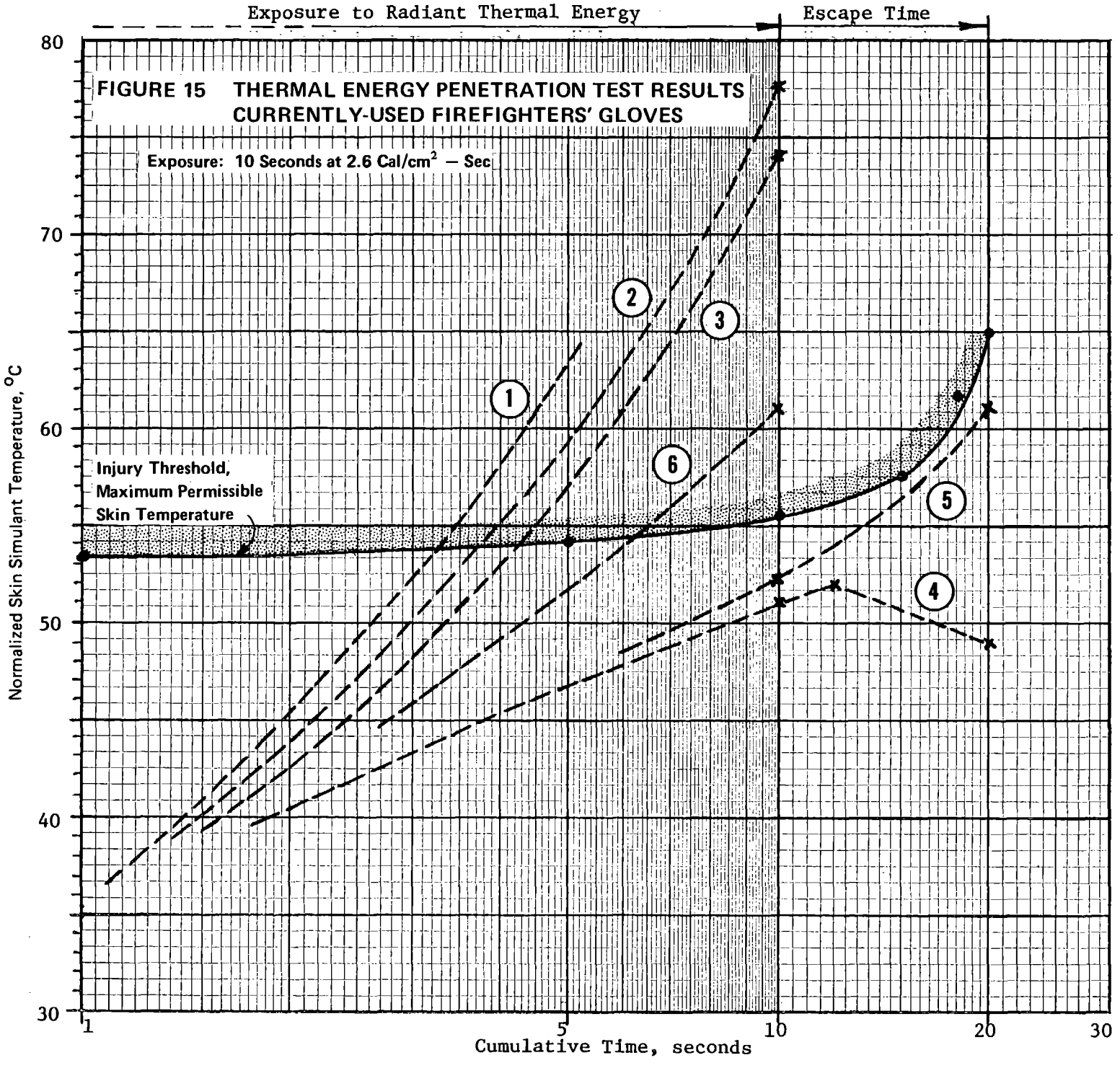

FIGURE 15 THERMAL ENERGY PENETRATION TEST RESULTS CURRENTLY-USED FIREFIGHTERS' GLOVES

LEGEND

Curve	Glove Identification Code	Brief Description
1	(C-1)	10-oz canvas (from palm of glove)
2	(L-2)	Palm leather with cotton backing
3	(ANOL-1a)	Palm leather with cotton backing
4	(ANOL-1a)	Aluminized Nomex (from back of glove)
5	(V-3)	Vinyl coated cotton with foam insulation (from palm of glove)
6	(NE-1)	Neoprene coated flannel (from palm of glove)

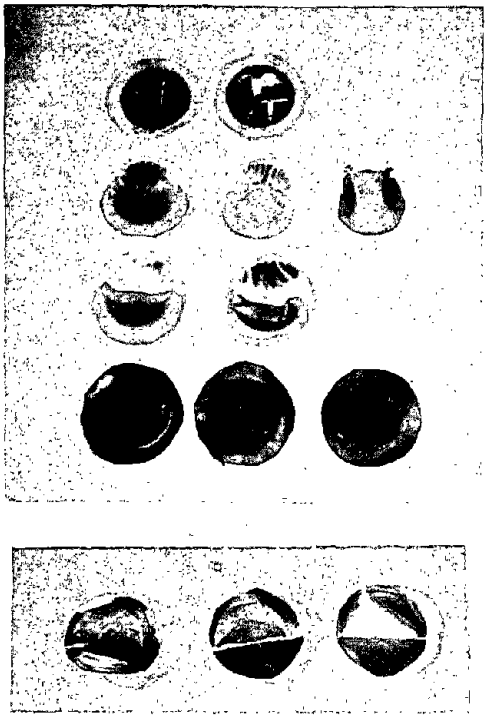

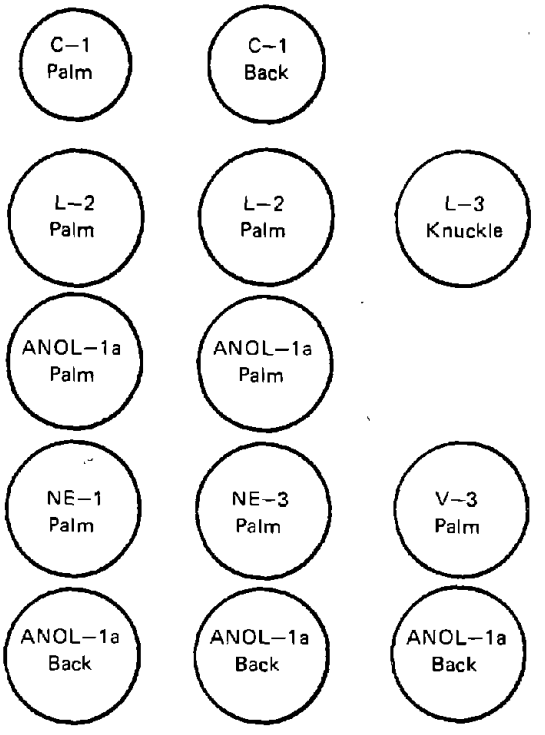

GLOVE IDENTIFICATION

Code	Brief Description
(C–1)	10-oz. Canvas from Palm and Back of Glove
(L–2)	Palm Leather with Cotton Backing
(L–3)	Knuckle Leather with Cotton Backing
(ANOL–1a)	Palm Leather with Cotton Backing
(NE–1)	Neoprene Coated Flannel from Palm of Glove
(NE–3)	Neoprene Coated Cotton with Foam Insulation from Palm of Glove
(V–3)	Vinyl Coated Cotton with Foam Insulation from Palm of Glove
(ANOL–1a)	Aluminized Nomex (with Cotton Under Layer) from Back of Glove

FIGURE 16 GLOVE MATERIALS AFTER EXPOSURE TO "EMERGENCY" RADIANT ENERGY

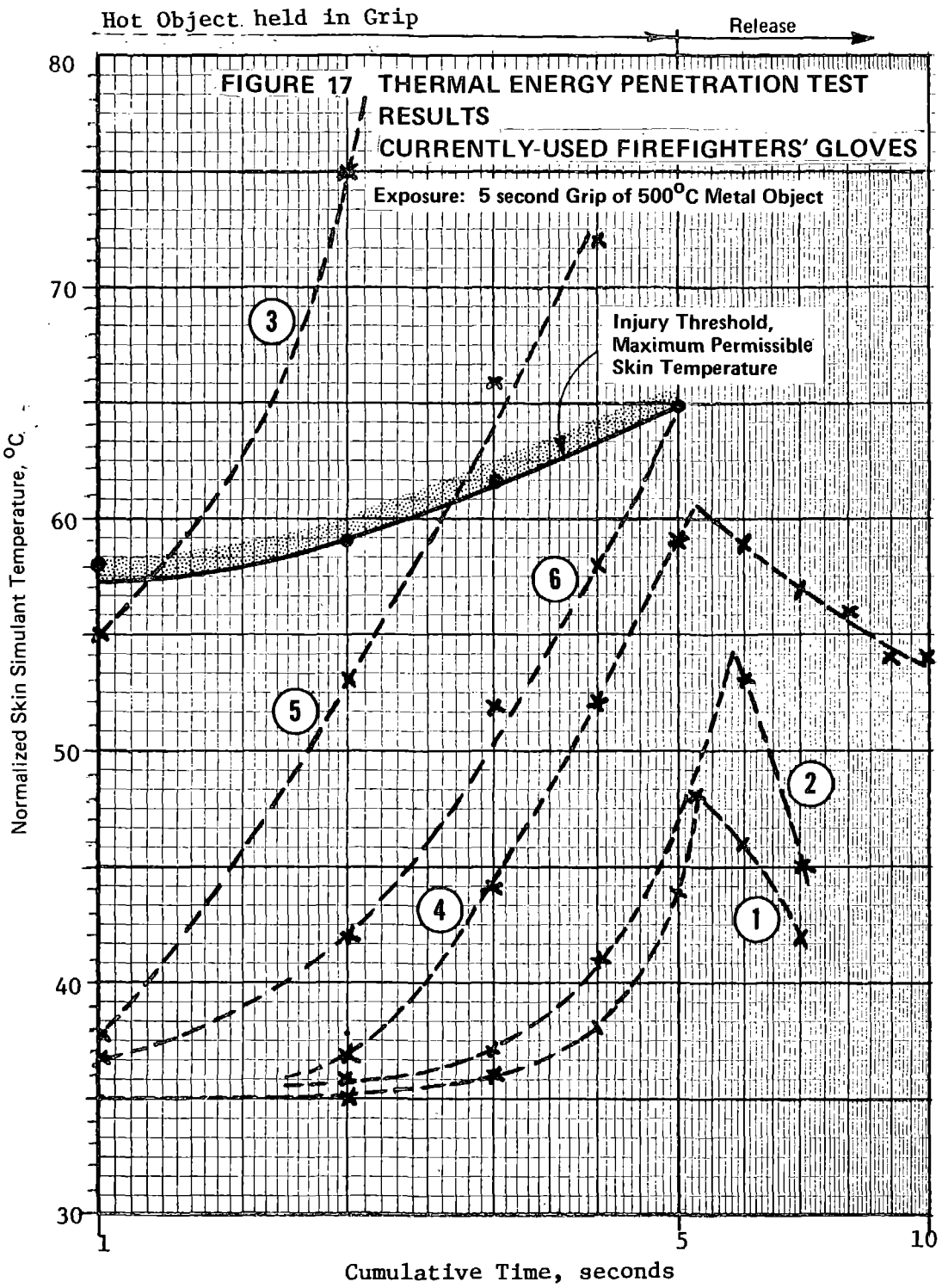

LEGEND

Glove Identification

Curve	(Code)	Brief Description
1	(L-1)	Palm leather with cotton backing
2	(L-2)	Palm leather with cotton backing
3	(ANOL-1a)	Aluminized Nomex (from back of glove)
4	(V-3)	Vinyl coated cotton with foam insulation (from palm of glove)
5	(NE-1)	Neoprene coated flannel (from palm of glove)
6	(NE-3)	Neoprene coated cotton with foam insulation (from palm of glove)

1. Firefighting Conditions

A fire scene typically contains a very large volume of water spread over the entire area. The initial water sources are the hoses used in knocking down the fire. In very short order, however, everything is wet with the run-off from structures and debris. Firefighters' gloves come in contact with water through handling hoses and through working in the generally wet environment. Depending on a glove's construction and materials, water can penetrate to the hand through an open wristlet or by soaking through the glove body.

In addition, hot working conditions can cause a firefighter to perspire excessively. This also results in wet hands and glove linings.

2. Skin Resistance to "Wet" Burn

When an internally wet glove is exposed to radiant and conductive thermal energies, water can be rapidly heated and vaporized to cause scalding. Scald is a specific type of burn injury and its characteristices are identical to those of dry burn injuries.

3. Glove Resistance to "Wet" Heat Penetration

To protect against scald-type injury, firefighters' gloves should meet the criteria for resistance to both heat penetration and liquid penetration. Resistance to heat penetration is described in Section II-C and resistance to liquid penetration is described in Section III-B.

E. RESISTANCE TO COLD

Fighting fires in winter conditions can be less than enviable because the cold interferes directly with physical activity through discomfort, pain and even injury. Gloves should be constructed to maintain warmth by insulating against the loss of body heat through the hands.

1. Firefighting Conditions

Snow, rain and freezing temperatures are common winter conditions in the northern half of the United States. In some areas, temperatures as low as −30°C (−22°F) are sustained for long periods. Firefighters must be prepared for exposure to such conditions for hours at a time. Moreover, discomfort, pain and injury from cold are all intensified by gloves soaked through with water.

2. Skin Resistance to Cold

The thermal conditions required to induce pain and injury to human skin provided a basis for establishing the minimum insulation levels needed in firefighters' gloves.

a. Cold Injuries

Frostbite, the most common injury from cold sustained by firefighters, develops when the skin is exposed to air temperatures below the freezing point.[29] Exposure times can be a matter of minutes or hours.

Superficial forms of frostbite result in loss of sensation and minor tissue damage which is similar to reversible, first-degree burn, but can have after-effects such as sensitivity to cold and recurring pain if pressure is applied to the affected area. More severe, deeper frostbite results in extensive tissue death and, in extreme cases, gangrene.

b. Measurements of Skin Resistance to Cold

The published data describing measurements of pain and injury from cold are disorganized and incomplete. Many of the clinical reports and experimental studies appear to be based on uncontrolled clinical procedures and to involve incorrect diagnoses. However, there does appear to be ample justification for considering cold trauma in terms of non-freezing and sub-freezing skin temperatures.

Montgomery has reviewed the reactions taking place under non-freezing skin conditions.[29] He notes that discomfort and pain are caused by a reduction in surface blood circulation and the resulting biochemical effects on skin cell activity. The reduction in surface blood flow is due to autonomic vaso-constriction as the body attempts to conserve heat by reducing losses through the surface tissue. The reduced blood supply gradually causes oxygen starvation of the cells. Therefore, injury develops slowly under lengthy exposures.

Stoll has identified 18°C (64°F) as the skin temperature for the onset of pain and 10°C (50°F) as the skin temperature for the onset of severe pain.[30]

Pain and injury (frostbite) under sub-freezing skin conditions are caused by formation of ice crystals within the skin cells and in the extracellular fluid surrounding the individual cells.[31] Water is separated from solution and frozen in pure form. Freezing can cause cell death. As in the case of burn, however, the extent of damage depends on the duration of freezing as well as on the conditions of thawing. The time required for irreversible damage at sub-freezing skin temperatures has not been clearly established; however, Stoll has estimated instantaneous degradation occurs at a skin temperature of 0°C (32°F).[30]

3. Glove Resistance to Cold

Since the times of exposure to cold vary from minutes to a few hours, deep frostbite can occur. In most cases, however, the firefighter realizes the injury's progress because of the loss of sensation, and seeks relief. Hence, less severe forms of frostbite predominate.

Accordingly, gloves used in winter conditions must protect against at least superficial frostbite. Ideally, they should protect well enough to avoid the onset of pain.

Therefore, the skin temperature required for the onset of pain (18°C or 64°F) has been chosen to establish the minimum acceptable level of protection. Firefighters' gloves should be constructed with enough insulation to keep the skin above 18°C (64°F) during non-sedentary exposures to an ambient temperature of −30°C (−22°F) for up to 2 hours. Some hand discomfort should be expected even when this condition is met; however, pain will not occur.

Gloves also should have adequate resistance to liquid penetration as described in Section III-B.

F. RESISTANCE TO ELECTRICITY

Electricity is the most severe hazard encountered by firefighters. Although electrical power is usually shut off by either the firefighters or the electric company emergency crew soon after the discovery of a fire, contacts with "hot" electrical sources do occur. Such contacts can result in very severe injury and even in instantaneous death. Firefighters are trained to treat electricity with great caution. Nonetheless, protection must be provided by their gloves, since hands are usually first to contact electrical hazards.

1. Firefighting Hazards

Firefighters can be exposed to electrical hazards while performing most of their tasks. Contact can be made with "hot" electrical connections or wires that have been torn from their normal mountings and are exposed. Firefighters are faced with the added danger of a highly conductive water path to ground when water has been used extensively or water-bearing pipes have burst. These exposures can occur when the firefighter enters and works in dark or unlit rooms, while he is performing rescue operations, while he is clearing debris and while he is securing a fire scene after a fire has been knocked down.

Worst-case electrical hazards are normally limited to 240 volts (grounded 2-phase current source) which may be found in residential structures and in light-industrial structures. Although higher voltages are found in heavy industry, they are not usually encountered by firefighters and are considered to represent a specialty firefighting situation. Firefighters who are exposed to such higher voltages will generally take proper precautions by using special safety equipment and by displaying due caution.

2. The Human Body's Resistance to Electricity

The electrical conditions required to cause injury to the human body provide a basis for establishing the resistance needed in firefighters' gloves.

a. Electrical Injuries

Electrical injuries in man are caused primarily by current flow. The body, or a portion of it, serves as a conductor in completing an electrical circuit between the electrical source and the ground.

Injuries can be either:

- Burns caused by resistive-type electrical heating, or
- Electrical disruption of vital organs such as the heart and the brain.[32]

In the case of burns, most tissue damage occurs at the point of contact with the electrical source or at the point of grounding.[33] At one or both of these locations, the density of the current is greatest and electrical arcing produces very high temperatures.

Under those conditions where resistance to entry is minimal, the current causes a "tingling" sensation or a more severe jolt or "shock." Should the current pass through any of the vital organs, the depolarization/repolarization sequence of muscle and nerve cells is interrupted, causing organ dysfunction and possible death.

b. Measurements of the Body's Resistance to Electricity

Electrical injury can vary from small localized lesions to substantial injuries involving deep tissue destruction. An injury's severity depends on one or more of at least eight interrelated factors[33]:

(1) The voltage of the power source.
(2) The average energy (watt-hours) of the power source.
(3) The resistance at the point of contact.
(4) The resistance at the point of grounding.
(5) The duration of contact.
(6) The pathway of the current through the body.
(7) The type of current (direct or alternating).
(8) The victim's individual susceptibility to electrical damage.

The voltages and currents necessary to cause an electrical burn are generally more severe than those necessary for a shock. The more common alternating current is more likely to cause a shock than a burn (and conversely, direct current is more likely to cause a burn than a shock).

One approach to estimating the body's resistance to electrical damage is to establish the "let-go" current associated with shock. The "let-go" current is the maximum current above which the victim's muscular contractions are so strong that he cannot release a

grabbed current source. Typical upper limits for "let-go" currents are 12 to 16 milliamps for a 60-cycle, 240-volt alternating current.[34,35] The actual value is a function of the physiological development and psychological expectations of the victim. Tests have shown that subjects who have purposely exposed themselves have been able to accept currents above 12-16 milliamps and still let go. However, "let-go" currents of 9 milliamps are considered appropriate for the average man and 6 milliamps for the average woman.[34,35,36]

Leakage current offers another measure of the body's resistance to electrical current. At residential voltages of 120 volts, a ground circuit leakage current of 5 milliamps has been selected as the safe limit in the design of ground fault circuit interruptors.[37] These are devices which are intended to protect the user of electrical appliances from shock in situations where contact with an electrical ground (leakage-current) is likely. The National Electrical Code requires that ground fault protection be provided in all 120-volt, single-phase, 15- to 20-amp outlets installed outdoors (e.g., exterior outlets from which metal-frame power tools are apt to be used), and in bathrooms. When a "leakage" current exceeds 5 milliamps, the device activates, shutting off the power supply. This current level provides a conservative estimate of the body's resistance to electrical injury.

A third estimate relates to more severe injury: ventricular fibrillation of the heart. Here the normal heart rhythm gives way to irregular and uncontrollable spasms, and the heart no longer pumps smoothly.

Currents required to induce ventricular fibrillation have been established by tests run on dogs, sheep and pigs. Such currents have been found to be a function of body weight. For a weight of 50 kilograms, the weight of a small adult, the threshold current required to cause fibrillation is given by the following empirical relationship:[34,35]

$$I \propto \frac{116 \text{ to } 185}{\sqrt{T}} \quad \left.\begin{array}{l} \text{5 seconds} \\ \\ \text{8.3 milliseconds} \end{array}\right.$$

where

I = current in milliamps
T = time in milliseconds

As the foregoing equation shows, the longer the contact time, the lower the threshold current. For the 50-kg adult, the lowest threshold current is 83 milliamps. Although a maximum limit of 5 seconds is shown, it has been projected that this current value would not change for times beyond 5 seconds.

3. Glove Resistance to Electricity

All firefighters' gloves should offer sufficient electrical resistance to prevent injury from contacts with direct current source at 240 volts. A "let-go" current of 6 to 9 milliamps is the threshold for substantial injury; however, the lower 5-milliamp trip current specified for ground-fault circuit interruptors provides a reasonable margin for safety. Therefore, both

dry and wet gloves should prevent currents of 5 milliamps or greater from being conducted to the inside.

4. Performance of Currently-Used Gloves

Tests conducted on a sampling of gloves currently-used by firefighters demonstrated that only impermeable elastomeric materials have adequate electrical resistance.* Table 4 summarizes these results. Natural rubber and neoprene were most resistant, while vinyl coated cotton was unstable, with increasing current leakage as testing progressed.

TABLE 4

ELECTRICAL RESISTANCE TEST RESULTS
CURRENTLY-USED FIREFIGHTERS' GLOVES

Glove Identification (Code)	Brief Description	Leakage Current - Wet Gloves (ma)	Observations	Criteria Rating
PERFORMANCE CRITERIA		<5.0		
Cotton				
(J-1)	9-oz Jersey	Infinite	Glove soaked through	Failed
(C-1)	10-oz Canvas	Infinite	Glove soaked through	Failed
Leather				
(L-1)	Leather palm, cotton back	Infinite	Glove soaked through	Failed
(ANOL-1a)	Leather palm, aluminized Nomex back	Infinite	Glove soaked through	Failed
Vinyl				
(V-1)	Vinyl impregnated cotton with foam insulation	Infinite	Glove soaked through	Failed
(V-3)	Vinyl coated cotton with foam insulation	0.8 → 8	As glove became more saturated, leakage current slowly increased	Failed
Natural Rubber				
(NR-1)	Natural rubber latex	0.0	Performance excellent	Passed
(NR-2)	Natural rubber coated cotton	0.0	Performance excellent	Passed
Neoprene				
(NE-1)	Neoprene coated flannel	0.3	Performance good	Passed

*A detailed description of the test method used is provided in Part II, Section II-F of this report.

III. OTHER REQUIREMENTS

Other glove requirements are considered to be those which relate more directly to manipulative ability, comfort and the materials' resistance to degradation under fire conditions than to protection from hazards resulting in trauma. In a manner similar to that used for hazard protection, one or more measurable glove parameters, which can be easily correlated with both firefighting conditions and glove properties, were chosen for quantitative development. For example, resistance to liquids is specified by penetration, retention and degradation. These parameters became the indices by which glove performance was measured.

The value for each parameter was established through a combination of demonstrated need and engineering judgment. In several cases, these values were compared to the performance levels demonstrated by gloves currently used by firefighters.

Table 5 identifies the criteria developed. This table, adapted from Table 8 in Volume I, also identifies the requirement for which quantitative criteria were not developed.

TABLE 5

SUMMARY OF OTHER CRITERIA

Other Requirements	Criteria Developed	Comments
Dexterity	Yes	
Resistance to the effects of liquids	Yes	
Comfort	Yes	
Resistance to flame	Yes	
Easily donned and doffed	No	This requirement is unecessary if all others are adequately met, especially the protective requirements.
Durability	Yes	
Rapid drying	Yes	
Visibllity	Yes	

A. DEXTERITY

In addition to protecting against the many fire scene hazards, firefighters' gloves should allow enough dexterity to permit the firefighter to perform all firefighting operations easily. Glove construction parameters such as size, finger configuration (e.g., seam location), and the materials' bulk and thickness can restrict manual agility.

Gloves which are currently used by firefighters can be so cumbersome that they are often removed during the height of a fire so that tasks can be completed more quickly. It is suspected that a significant number of hand injuries occur while firefighters are bare-handed.

1. Firefighting Tasks

A review of the many tasks comprising current firefighting techniques reveals the need for substantial flexibility and finger agility. For example, operating vehicle switches and knob-type controls, operating radio equipment and portable "walkie-talkies," operating the controls of pumping equipment, tying knots in rope lines and operating power tools all demand "fine-grip" manipulations. Table 6, a listing of typical firefighting tasks, indicates that these and other manipulations are required of all firefighters, whether they are assigned to an engine, ladder or rescue firefighting company.*

2. Glove Dexterity

The most effective way to insure adequate flexibility and finger dexterity is to design a glove that permits the execution of a difficult, yet representative, manipulation. Gloves can then be evaluated on a pass/fail basis by demonstrating the ease or difficulty of performing that specific task. Moreover, any attempt to somehow evaluate each glove construction parameter would result in a complex and unwieldly procedure, because all of the parameters are interrelated.

The task chosen as difficult, yet representative of "fine-grip" manipulations, is simply to pick up a pencil, dry or wet, from a flat surface. This takes into account the effects of fit, finger construction and material bulkiness.

Therefore, gloves acceptable for use in firefighting must allow a pencil – simulated by a smooth-surfaced stainless-steel rod of 5.0-mm (0.20-in.) diameter and 40.0-mm (1.6-in.) length – to be picked up from a flat surface by each of the four possible combinations of thumb and finger.[38]

3. Performance of Currently-Used Gloves

Tests conducted on a sampling of gloves currently used by firefighters demonstrated that several types meet the "fine-grip" criteria under both dry and wet conditions.**

---

* Table 6 was prepared with the assistance of representatives from the Cambridge (Mass.), Chicago, and New York City Fire Departments.

** A detailed description of the test method used is provided in Part II, Section II-G, of this report.

TABLE 6

TYPICAL MANUAL TASKS ENCOUNTERED IN FIREFIGHTING

PUMPER OR ENGINE COMPANY

RUN TO FIRE

Driving vehicle

- manipulating switches
- shifting gears
- turning wheel
- operating radio equipment

SET UP AT FIRE SCENE

Securing vehicle (chocking wheels)

Removing and setting up support equipment and hose with associated apparatus

Making up hydrants

Opening valves

FIGHTING FIRE

Operating pumping facilities

Advancing hose and nozzles

- opening nozzles
- opening doors and windows
- moving furniture

Searching premises (under beds and closets) for overcome or trapped persons

Using rope lines and tying knots

Blocking sprinkler heads/ replacing sprinkler heads

Using all tools and equipment assigned to engine and other vehicles

Operating portable radio equipment

Using breathing equipment

OVERHAUL OR CLEAN-UP

Operating pumping facilities

Using hose and nozzles to extinguish remaining hot spots

LADDER COMPANY

RUN TO FIRE

Driving vehicle

- manipulating switches
- shifting gears
- turning wheel
- operating radio equipment

Steering tiller

- turning wheel

SET UP AT FIRE SCENE

Securing vehicle (chocking wheels)

Removing and setting up support equipment and hose with associated apparatus

Setting up aerial and ground ladders

FIGHTING FIRE

Operating aerial ladder controls

- stationing outriggers

Climbing ladders

- carrying tools up and down
- carrying people down
- moving hose and associated apparatus

Making forcible entry

Opening roof or side of building for ventilation

Performing first aid

Using all tools and equipment assigned to ladder and other department vehicles

Blocking sprinkler heads/ replacing sprinkler heads

Using rope lines & tying knots

Providing overall ground support

OVERHAUL OR CLEAN-UP

Using hand tools and cutting tools to open walls, ceilings in search of remaining hot spots

Sifting through debris and rubble in search of remaining hot spots

Securing building or structure

SPECIAL (BULK OIL OR CHEMICAL) COMPANY

RUN TO FIRE

Driving vehicle

- manipulating switches
- shifting gears
- turning wheel
- operating radio equipment

SET UP AT FIRE SCENE

Securing vehicle (chocking wheels)

Removing and setting up support equipment and hose, extinguishing agent generating system, and associated apparatus

FIGHTING FIRE

Operating pumping facilities, often from inside cab of special tank vehicle

Advancing hose and nozzles, often to close proximity of fire

Opening and closing valves on burning equipment or storage facilities

Using standard or special cutting equipment (such as oxyacetylene torch)

Handling hazardous, toxic, or exotic chemicals and materials:

- acids, bases, and other corrosive materials
- cryogenic gases and liquids
- pesticides and insecticides
- ammonia and other chemicals — many skin absorbent
- explosives, rocket propellants
- hot metals
- radioactive materials

Operating special instrumentation

- infrared detector
- gas analyzer (for determining explosive mixtures)
- geiger counter

Using all tools and equipment assigned to engine and other vehicles

Operating portable radio equipment

Using breathing equipment

OVERHAUL OR CLEAN-UP

Operating pumping facilities

Using hose and nozzles to extinguish remaining hot spots

However, several types performed very poorly, usually because of the location of finger seams, the materials' bulkiness or the materials' smoothness. Table 7 summarizes these test data.*

B. RESISTANCE TO LIQUIDS

Firefighters' gloves are continually in contact with liquids – especially water – at a fire scene. Gloves should resist the effects of such contacts both to protect a hand and to improve the glove's durability.

1. Firefighting Hazards

Water, as the most common extinguishing agent, is the liquid encountered most frequently. However, other extinguishing agents, petroleum-based fuel products, mild solvents and cleaning fluids are encountered occasionally. Ideally, gloves should resist penetration by, retention of, and degradation by all of these liquids.**

a. Liquid Penetration

Pentration of liquids to the inside of firefighters' gloves causes discomfort and irritation, reduces protection against electrical hazards and increases the possibility of hot liquid burn or scald. Furthermore, the combination of a wet glove and a wet hand reduces working efficiency by degrading a firefighter's gripping and manipulative abilities.

b. Liquid Retention

A glove's tendency to soak up liquids (i.e., the absorption characteristics of the component materials) influences both comfort and function. The glove materials adjacent to or in contact with the skin should absorb perspiration to maintain a comfortable feel;

---

* Table 7 also lists the results of "coarse-grip" testing. This represents less precise tasks, such as moving hose and hoisting ladders. There is too much overlap in the duties of each firefighting company to permit an easy or useful distinction between "fine-grip" and "coarse-grip" requirements.
The task chosen as representative of "coarse-grip" finger manipulations is that of picking up a medium-sized bolt or small tool. This task is simulated by picking up a smooth-surfaced rod of 8.0-mm (0.30-in.) diameter.
The test data are shown for comparison only. Several of the gloves that do not meet the "fine-grip" criteria do meet the "coarse-grip" criteria.

** Exposures to strongly active liquids such as acids, alkalis, oxidizing agents, reducing agents and toxic substances are infrequent and are considered specialty situations requiring gloves of highly resistant materials.

TABLE 7

DEXTERITY TEST RESULTS*
CURRENTLY-USED FIREFIGHTERS' GLOVES

Glove Identification		Dry/Wet Test Data: Gloves Suitable for:			
(Code)	Brief Description	Fine-Grip	Coarse-Grip		Comments
Cotton					
(J-1)	9-oz Jersey	Yes/Yes	Yes/Yes	D** –	Thin fabric, easy grip.
				W** –	More feel when wet.
(C-1)	10-oz Canvas	Yes/Yes	Yes/Yes	D –	Thin fabric, but bulky at fingertips.
				W –	Same when wet.
Leather					
(L-1)	Cotton back with leather palm and palm side of fingers	No/No	Yes/No	D –	Forefinger stitching interferes with gripping smaller pin.
				W –	Worse when wet.
(L-2)	Cotton back with leather palm and palm side of fingers	No/–	Yes/–	D –	Same as (L-1), some fumbling with smaller pin.
(L-3)	Cotton back and fingers with leather palm	No/Yes	Yes/Yes	D –	Same as (L-1), some fumbling with smaller pin.
				W –	Leather softer when wet; this facilitates pickup of smaller pin.

*Only the thumb and forefinger were used for these determinations.

**D – Refers to dry test. W – Refers to wet test.

TABLE 7 (Continued)

Glove Identification		Dry/Wet Test Data				
		Gloves Suitable for:				
(Code)	Brief Description	Fine-Grip	Coarse-Grip			Comments
(L-4)	Full leather ski mitten	No/No	Yes/Yes	D	–	Smaller pin could not be picked up.
				W	–	Same when wet.
(L-5)	Leather back, palm and fingers	No/No	Yes/Yes	D	–	Same as (L-1)
				W	–	Same when wet.
(L-6)	Cotton back with leather palm and palm side of fingers	No/No	Yes/Yes	D	–	Same as (L-1).
				W	–	Same when wet.
(L-7)	All leather	Yes/–	Yes/–	D	–	Thin, soft and pliable material.
(ANOL-1a)	Aluminized Nomex back with leather palm and palm side of fingers	No/Yes	No/Yes	D	–	Very sloppy fit, only larger pin could be picked up.
				W	–	Leather softened when wet.
(ANOL-1b)	Aluminized Nomex back with leather palm	No/–	Yes/–	D	–	Better fit than (ANOL-1a).
Vinyl						
(V-1)	Vinyl impregnated cotton with foam insulation	Yes/Yes	Yes/Yes	D	–	Sloppy fit but tacky surface facilitated pickup.
				W	–	Same when wet.
(V-2)	Vinyl coated cotton with foam insulation	Yes/Yes	Yes/Yes	D	–	Same as (V-1).
				W	–	Same when wet.

TABLE 7 (Continued)

Glove Identification		Dry/Wet Test Data				
		Gloves Suitable for:				
(Code)	Brief Description	Fine-Grip	Coarse-Grip			Comments
(V-3)	Vinyl coated cotton with foam insulation	No/–	No/–	D	–	Sloppy fit, stiff and slippery surface.
(V-4)	Vinyl coated cotton with thermal lining	No/No	No/No	D	–	Same as (V-3).
				W	–	Surface loses grip when wet.
(V-5)	Vinyl coated cotton	No/No	Yes/No	D	–	Same as (V-3), but with more tacky surface.
				W	–	Same as (V-4)
Wool						
(W-1)	Fisherman's mitten	No/No	No/No	D	–	Difficult to grip all except the larger pin, very bulky.
				W	–	Same when wet.
Natural Rubber						
(NR-1)	Rubber coated cotton	Yes/Yes	Yes/Yes	D	–	Sloppy fit, but tacky surface facilitates pickup.
				W	–	Same when wet.
(NR-2a)	Rubber coated cotton	Yes/Yes	Yes/Yes	D	–	Same as (NR-1).
				W	–	Same when wet.
(NR-3)	Rubber coated cotton with surface "Rubber Dust"	Yes/Yes	Yes/Yes	D	–	Same as (NR-1) but stiff.
				W	–	Same when wet.

TABLE 7 (Continued)

Glove Identification		Dry/Wet Test Data				
		Gloves Suitable for:				
(Code)	Brief Description	Fine-Grip	Coarse-Grip			Comments
Neoprene						
(NE-1)	Neoprene coated flannel	No/Yes	No/Yes	D	–	Slippery surface and stiff fingers.
				W	–	Grip better when wet.
(NE-2)	Neoprene coated cotton	Yes/Yes	Yes/Yes	D	–	Sloppy fit, but tacky surface facilitates pickup.
				W	–	Same when wet.
(NE-3)	Neoprene coated cotton with foam insulation	Yes/Yes	Yes/Yes	D	–	Same as (NE-2).
				W	–	Same when wet.

however, other glove components should resist liquid absorption. Liquid which has accumulated in the outer materials reduces dexterity through increased glove weight, excessive liquid release during hand manipulations (by acting as a sponge), and possible freezing (with decreased flexibility). Moreover, the retention of flammable liquids could present an ignition problem.

c. Material Degradation

Many materials which are potentially useful for firefighters' gloves are degraded by contact with petroleum-based fuel products and solvents. This degradation ranges from simple swelling and softening to the extreme of complete chemical attack and dissolution. When they occur, exposures to such substances typically last from a couple of minutes to a maximum of half an hour.

2. Glove Resistance to Liquids

Firefighters' gloves should be constructed to resist each of the three hazards relating to liquids.

a. Liquid Penetration

Resistance to penetration can be obtained in two ways. First, at least one material layer – either alone or as a component of a composite or "sandwich" structure – and all through-seams should be impermeable to commonly encountered liquids. The glove structure and all seams should withstand a differential water pressure of 4 psi* for 1 minute without detectable leakage or seepage in order to be considered resistant to penetration.

Second, the wrist closure should be designed to prevent liquids from entering freely. (See Section IV-B.)

b. Liquid Retention

The retention characteristics of materials are traditionally specified by either the amount of liquid they absorb or the amount of liquid they repel.

Information on liquid absorbence has been prepared by Utech through tests on firefighters' turnout coats.[39] These data show that impermeable rubber outer shells absorb less than 2% water (by weight), canvas outer shells absorb between 25 and 35% water, and high-temperature nylon outer shells absorb between 12 and 25% water. However, Utech concluded that, from a weight standpoint, absorbence below 5% is desirable for turnout coats. Since gloves are considerably smaller and the impact of weight gain is less, 10-15% is recommended.

*4 psi corresponds to the maximum compressive pressure during grip as discussed on page 35 of this report.

The degree of wetting by a liquid on the surface of a material is a commonly used index for repellency. A method for using this index is described in the AATCC Test Method 22-1971.[40] For firefighters' gloves, an appropriate threshold for repellency would be some point prior to that at which complete wetting of the outer surface occurs. However, this is a difficult parameter to measure.

Therefore, the glove materials should be chosen by resistance to absorption. They should retain less than 15% water (by weight) after being soaked in a water bath and mildly shaken free of excess liquid. This pertains to the outer materials only – water is prevented from entering to the inside.

c. Material Degradation

Glove outer materials should not show visible signs of chemical attack, swelling or stiffening when exposed for 15 minutes to petroleum fuel products and common solvents and cleaning fluids.

3. Performance of Currently-Used Gloves

A sampling of currently-used gloves was tested for their resistance to liquid penetration.* As expected, the materials which kept out water effectively were those of an obviously impermeable nature such as vinyl, natural rubber and neoprene. These test results are shown in Table 8.

C. COMFORT

User comfort is a key factor in the acceptance of any glove design or configuration. Once a firefighters' glove has been perceived as uncomfortable, it will either not be used or, worse, may be removed while in use at a fire. Moreover, if a glove is uncomfortable, but firefighting conditions force its use for protection, physiological and psychological stresses can develop which will reduce a firefighter's attentiveness to the tasks at hand and possibly induce accidents. Therefore, as an encouragement to glove use, comfort is appropriately included among the more substantive performance criteria dealing with thermal and mechanical hazards.

1. Firefighting Conditions

In carrying out his duties, a firefighter works strenuously in intense heat, high humidity and often bone-chilling cold. Ideally, all turnout gear should be designed to isolate his body from these conditions. However, most clothing items – including gloves – designed for such protection are also very efficient in retaining the excess body heat and perspiration

---

* A detailed description of the test method used is provided in Part II, Section II-H of this report.

TABLE 8

LIQUID PENETRATION TEST RESULTS
CURRENTLY USED FIREFIGHTERS' GLOVES

Glove Identification (Code)	Brief Description	Water Penetration Pressure (psig) Palm	Back	Seam Area	Observations	Criteria Rating
PERFORMANCE CRITERIA:		> 4.0	> 4.0	> 4.0		
Cotton						
(J-1)	9-oz Jersey	0	0	-	No resistance	Failed
(C-1)	10-oz Canvas	0	0	-	No resistance	Failed
Leather						
(L-1)	Leather palm, cotton back	1.0	0	-	Leather wetted	Failed
(L-2)	Leather palm, cotton back	2.2	0	-	More resistant than (L-1)	Failed
(L-3)	Leather palm, cotton back	1.0	0	-	Same as (L-1)	Failed
(ANOL-1a)	Leather palm, aluminized Nomex back	-	8^+	-	-	Incomplete
Vinyl						
(V-1)	Vinyl impregnated cotton with foam insulation	8^+	2.5^+	-	Good	Failed
(V-3)	Vinyl coated cotton with foam insulation	8^+	8^+	-	Performance excellent	Passed
(V-4)	Vinyl coated cotton with thermal lining	8^+	8^+	-	Performance excellent	Passed
Natural Rubber						
(NR-1)	Natural rubber latex	5^+	5^+	-	Balloons under pressure	Passed
(NR-2)	Natural rubber coated cotton	8^+	8^+	-	Performance excellent	Passed
Neoprene						
(NE-1)	Neoprene coated flannel	8^+	8^+	-	Performance excellent	Passed
(NE-3)	Neoprene coated cotton with foam insulation	7^+	8^+	-	Performance excellent	Passed

generated during moderate or heavy exertion. This retained heat and moisture contributes directly to the perception of protective clothing as uncomfortable.

The extent to which these factors cause glove discomfort is a complex function of both environment and activity level, as well as of the thermal energy and moisture transport properties of the glove materials.

2. Parameters Influencing Comfort

In describing requirements for turnout coat comfort, Utech lists thermal energy transmission to and from the skin, evaporation of moisture from the skin, water absorbency of materials in contact with the skin, and overall clothing weight, stiffness and fit as most important.[39] These have a direct bearing on the amount of excess metabolic heat and moisture generated and retained during firefighting. It is appropriate to extend these same considerations to an analysis of the comfort of firefighters' gloves:

a. Thermal Energy Penetration and Moisture Evaporation

Thermal energy which is transmitted to and from the skin, and moisture which is evaporated from the skin are interrelated and therefore treated together. They are considered to be the primary influences in determining comfort.

The fundamental process of heat exchange between the human body and its environment is described by an overall heat balance:[41]

$$S = M - (+ W + E + R + C)$$

where:

S	=	rate of body heat storage (normally 0 when the body is in equilibrium)
M	=	rate of metabolic energy generated (above that generated for the maintenance of normal physiological functions)
W	=	thermal equivalent of energy expended as mechanical work
E	=	rate of thermal energy removed by evaporation of moisture from the skin surface
R + C	=	dry heat exchanged by the skin to the environment through radiation (R) and convection (C).

When the right side of the heat balance equation is positive, the body is not losing all of the heat it is generating; the mean body temperature is slowly rising and there may be a sensation of warmth and perspiration. When the right side of the heat balance equation is negative, the body is not generating as much heat as it is losing; the mean body temperature is falling slowly and there may be a sensation of cold. When all factors balance and there is no net heat gain or loss, the body is in comfortable equilibrium. Stoll has reported that for temperatures above those necessary for a heat balance, a change of skin temperature at the rate of +.001 to +.002°C/sec produces a sensation of warmth.[30]

Conditions for the ideal thermal comfort of the entire body tend to be evaluated subjectively.[14,41,42,43] ASHRAE (The American Society of Heating, Refrigerating and Air Conditioning Engineers) defines thermal comfort as "that condition of mind which expresses satisfaction with the thermal environment."[41] Since many environmental phenomena can affect the heat balance equation – air movement, relative humidity and air temperature – many researchers have investigated the relationship between environmental conditions, clothing insulation and the conditions necessary for thermal comfort. Comfort envelopes in terms of psychometric charts with defined comfort zones and even related insulative values for clothing have been established. However, such charts can be used only as guidelines because of the variations of the human body.[44] Conditions comfortable to one person may not be as comfortable to another.

Evaluating the thermal comfort of a firefighter's glove is a significantly more complex problem. A firefighter is concerned with two very distinct activity levels and corresponding environmental heat levels.

The first relates mostly to glove use under non-strenuous conditions and can be addressed by the approach described above. A firefighter wishes to feel comfortable when he first dons his turnout gear and during travel to the fire scene in open air. Under such sedentary conditions, the psychometric charts are operable and have meaning.

In cold ambient environments, thermal equilibrium can be maintained by either increasing the rate of metabolic heat generation to compensate for losses through clothing, or by decreasing heat loss to the environment through improved clothing insulation. The first method is not appropriately applied to firefighters because their worst cold problems are encountered during periods of relative inactivity when metabolic energy generation is at a minimum. The only applicable method is to increase the insulative values of the clothing worn. For example, composites of several layers of batt insulation with an impermeable reflective layer have proven successful in maintaining body heat balance in very cold environments.

Berenson and Robertson indicate that skin temperatures of 93-94°F (34-35°C) are comfortable; while below 89°F (32°C), a sensation of cold develops.[45] The lower value correlates with ASHRAE data which indicate that for skin temperatures of 88°F (31°C),

sensations of uncomfortable cold are reported.[41] Berenson and Robertson also note that the extremities are able to tolerate lower (and presumably higher) temperatures than the rest of the body. They report sensations of uncomfortable cold for the hand only at skin temperatures of 68°F (20°C). Iampietro found that it is possible for parts of the body to tolerate skin temperatures of 70-100°F (21-38°C) for 120 minutes or more.[46] He notes also that skin reaches these temperatures within 10 minutes after being exposed to extreme environments. It is reasonable to consider that hand-skin temperatures of 88-100°F (31-38°C) can be tolerated for reasonably long periods under sedentary conditions.

The second comfort level, and the one most relevant to firefighters' gloves, occurs during strenuous firefighting activity. The hot environment and high metabolic activity usually preclude an equilibrium heat balance. Comfort (or perhaps, the threshold of discomfort) can be more readily defined here as that condition of mind and body where task performance is not seriously affected. Concern is therefore with the limits of physiological and psychological stress rather than with an equilibrium heat balance.

Although most of the published data dealing with the effects of clothing address restrictions to either whole-body heat loss or trunk heat loss, some data deal with the extremities. In a series of experiments using military personnel as test subjects, the addition of a face mask, hood and gloves to an overgarment with an impermeable liner decreased the evaporation of perspiration by 20%. For half of the test subjects, the average time to reach heat exhaustion decreased from 120 minutes to 85 minutes while doing hard work.[47]

Experiments have shown that an average man's heat production while working hard is approximately 250 kcal/hr, and that a cumulative body heat storage value (S) of about 8.0 kcal is a critical lower level for subjective tolerance.[47] In hot environments, almost all of this metabolic heat must be dissipated through the evaporation of perspiration. However, when the body is covered by impermeable overgarments such as turnout gear, relief through evaporation becomes difficult. Secreted perspiration cannot be evaporated and remains on the skin to cause a warm, wet and sticky sensation. Here, then, the proper approach to reducing discomfort can only be by removing as much perspiration as possible through non-evaporative methods (absorption by materials next to the skin) and preventing the skin temperature from reaching painful or harmful levels.

It has been shown that unhindered performance of tasks can still be expected with skin temperatures approaching the pain threshold. Tolerance time approaches zero as skin temperatures reach a high of 115°F (46°C) and a low of 60°F (16°C).[46] The upper temperature is just above the long-term limits identified for reversible burn (44°C) in the criteria for resistance to thermal energy penetration. The lower temperature corresponds to Berenson's listing of 68°F (20°C) as an uncomfortable cold hand-skin temperature. Moreover, this low limit also corresponds to the 64°F (18°C) threshold for pain identified in the criteria for resistance to cold. Accordingly, the most comprehensive specification of temperatures which can be tolerated by the hands is the temperature limitation established by the heat and cold penetration criteria.

b. Material Absorbency

The human body is nearly always secreting some perspiration to assist in maintaining the equilibrium heat balance. Except during moderate and heavy physical exertion, the normal ambient relative humidities and air movements are enough for complete evaporation and dry skin. However, during periods of increased activity when greater amounts of perspiration are generated, high humidity and poor air circulation over the skin restrict the evaporative mechanism. Impermeable protective clothing sharply accentuates decreased evaporation and quickly causes a warm, wet and uncomfortable feeling to develop.

When protective clothing must be worn, it is desirable to reduce the perspiration buildup by evaporation through maximum air circulation and by moisture transport away from the skin with hygroscopic materials. However, air circulation within a glove is poor at best, especially within liquid-impermeable gloves. In glove design, therefore, perspiration removal must be approached through the use of absorbent inner materials.

Moisture should not only be absorbed by materials, it should also be wicked away from its point of pickup in order to provide an adequate absorbent capacity. Accordingly, several investigators have suggested that materials with a low or moderate regain (the ability to absorb) but a large wicking tendency are more preferable in protective clothing than materials with a high regain alone.[14] Also, wicking by mechanical means, with no fiber absorbency, causes a feeling of skin wetness and therefore discomfort.[43] The maximum absorption of most animal and natural fibers falls between 30 and 45% by weight (wools and cottons). The absorption characteristics of these materials fit into a low- or moderate-regain, high-wicking-tendency category. It is for this reason that they are so popular for use in clothing.

For the lining or inner material of firefighters' gloves, a moisture absorbency of 30% by weight is a reasonable extension of these data. A satisfactory rate of absorbency has been specified as 0.01 milliliter of water per second.[48]

c. Glove Weight

Excessive weight in a firefighter's glove is undesirable for two reasons. First, considerable material weight suggests a bulky, awkward construction which interferes with the necessary manipulative functions of the hand. Second, heavy gloves add to the heat retained and reduce the time necessary for hand and arm fatigue to develop.[49]

The dexterity requirements established for firefighters' gloves adequately address the problem of restricted manipulative functions. Therefore, this consideration is referred to the performance criteria on dexterity.

Glove warmth through the insulation provided by excessive material is determined by thermal energy transmission, perspiration evaporation and inner material absorbency, as described earlier. The principles outlined also apply here.

Overall glove weight can be controlled by designing gloves to be as trim as possible while still meeting all other performance criteria. As a guideline for maximum weight, twice the average of 0.25 lb (114 gms) for gloves currently used by firefighters should be adopted.

d. Material Stiffness

Overall glove stiffness or flexibility has also been addressed by the performance criteria on dexterity. However, the stiffness or actual "feel" of the materials next to the skin must be described in some depth.

The common terminology used to describe a material's feel is its "hand" or "handle." Schwarz defines hand as that feel which qualitatively deals with stiffness, limpness, hardness, softness, roughness and smoothness.[42] Note that stiffness is only one aspect of a material's hand.

Values of fiber stiffness are commonly examined and measured. They range from the flexible materials such as wool and acetate rayon to stiff materials such as glass, flax and hemp. The higher the stiffness value, the less the flexibility of a fiber. Fiber stiffness does not necessarily imply fabric stiffness, although for identical weaves this may be a reasonable assumption.

As a qualitative glove-comfort criterion, the inner materials should have a "hand" that is perceived as soft and flexible by the wearer (in this case, the firefighter).

e. Glove Fit

Glove sizing or fit is important to glove comfort as well as to glove usefulness. Several problems have been identified as often occurring with gloves currently used by firefighters:

- Excess finger and thumb length diminishes ability to pick up objects or manipulate controls, dials, etc.

- Not enough finger length results in poor overall glove fit with the palm of the glove moved up over the crotch of the fingers. This restricts the natural flexing of all four fingers.

- Too-tight fingers are uncomfortable. When tightness is caused by an internal seam, the skin can actually be abraded raw during glove use.

- When the thumb crotch seam is misplaced from the actual thumb crotch, flexing of the entire thumb is restricted.

- When the palm has excess material, grasping manipulations with the entire hand are hindered because the material tends to "bunch up" in the palm.

- A loose-fitting glove is generally sloppy to work with. A firm grip is difficult to attain – or at least the wearer thinks it is. It is easier for water and debris to work their way inside a loose glove.

- A very tight glove is generally hot, uncomfortable, and causes excess perspiration to develop.

The limited selection of sizes in nearly all glove styles precludes hope of a reasonable fit. More attention must be placed on proper sizing of gloves to assure that poor fitting practices are no longer promulgated.

3. Glove Comfort

Based on the preceding information, several performance criteria directed toward firefighters' comfort can be specified. Firefighters' gloves should meet all aspects of these criteria in order to provide minimum acceptable levels of comfort.

a. Thermal Energy Penetration

Gloves should maintain hand-skin temperatures within the range of 64-111°F (18-44°C). These temperature limitations will be met if the criteria for resistance to both cold (Section II-E) and heat penetration (Section II-C) are achieved.

b. Material Absorbency

Glove linings or inner materials should absorb at least 30% water (by weight) at a rate of 0.01 milliliter per second.

c. Glove Weight

Each glove should weigh no more than 0.5 lb (228 gm).

d. Material Stiffness

Glove linings or inner materials should have a soft and flexible "hand." Overall glove stiffness or flexibility requirements will be met if the performance criteria for dexterity are achieved.

e. Glove Fit

Gloves should be sized to provide a good fit. This is discussed in more detail in Section IV-A.

D. RESISTANCE TO FLAME

In carrying out his assignment, a firefighter is often close to open flame and is often called upon to handle burning objects and materials. Therefore, his gloves must withstand flame impingement without significant degradation.

1. Firefighting Hazards

The exposures which commonly result in flame impingement are:

(1) Being Struck by Falling Materials and Debris
- Dripping, burning tar, grease, paint and plastic
- Burning embers
- Melting, burning insulation
- Burning chemicals (e.g., gasoline)
- Disintegrating, burning debris from walls, ceilings and stairways

(2) Handling Burning Objects and Materials
- Mattresses and bed springs
- Wooden furniture
- Wooden and plastic debris
- Doors, window frames and stair railings
- Automobile and truck components

(3) Being Caught in Extraordinary Exposures
- Explosions
- Flashing or back-drafts

2. Material Resistance to Flame

Since contacts with open flame and burning objects are unavoidable, it is desirable that glove outer materials be as resistant to flame as possible. This resistance is best specified in terms of changes in material properties. For example, if a material sustains a flame, it rapidly disintegrates and loses continuity, strength and resistance to other hazards – and is obviously unsatisfactory. But if a material carbonizes but does not sustain a flame, its suitability must be determined by the extent of change and of losses in physical properties. The same is true for materials that shrink, melt or embrittle.

Several parameters are useful in measuring a material's resistance to flame. The most direct are the ability to sustain a flame (after-flame time – measured after an ignition source is removed), the tendency to smolder after a flame has been extinguished (after-glow time), the extent of burn (weight percent consumed), and the extent of charring, dripping, melting or shrinking. Each of these parameters provides an indirect measure of changes in a material's physical properties: strength, brittleness, flexibility and thermal resistance.

Ignition tests are most often used to evaluate flame resistance of materials. The most flammable orientation for many materials – and the one most frequently used – is vertical hanging. In this orientation, a flame located below a material specimen impinges on its front and back surfaces and on its edges.[50] However, the edges of glove materials are not exposed to flame in actual use; only the outer surfaces are exposed.

3. Glove Resistance to Flame

Utech's work on firefighters' turnout-coat materials has been used in identifying a flame hazard representative of fire scene exposures:[39] A material used for the outer surfaces – including the wrists – of firefighters' gloves should resist degradation on exposure to a 1200°F (980°C) flame for 12 seconds. Resistance to degradation is established by the following:

- Measurable Changes

  After-flame time should not exceed 2 seconds.
  After-glow time should not exceed 2 seconds.
  Visible charring should not exceed 1 inch.
  Consumed material should not exceed 5% by weight.

- Observable Changes

  There should be no visible evidence of melting or dripping.
  There should be no visible evidence of embrittlement or shrinkage.

Where possible, outer materials which are part of a composite or "sandwich" glove construction should be evaluated with the backing materials in place. The backing materials can influence the flame resistance of the outer materials by rapidly conducting heat away from the flame impingement area and thereby reducing the susceptibility to degradation.

4. Performance of Currently-Used Gloves

Tests conducted on a sampling of gloves currently used by firefighters have shown that only three types are actually resistant to flame: leather, natural rubber-coated cotton, and neoprene-coated cotton.* The other materials were either consumed or degraded by melting or charring. These test results are presented in Table 9 and Figure 18. Such performances are consistent with the behavior for each glove type as reported by firefighters.

*A detailed description of the test method used is provided in Part II, Section II-I of this report.

TABLE 9
FLAME RESISTANCE TEST RESULTS
CURRENTLY-USED FIREFIGHTERS' GLOVES

GLOVE IDENTIFICATION		DATA FOR FLAME EXPOSURE					CRITERIA RATING	
(Code)	Brief Description	After Flame Time (sec)	After Glow Time (sec)	Char Length (inches)	Percent Consumed	Observations of Melting, Dripping, Shrinking, etc.	Pass	Primary Failure
PERFORMANCE CRITERIA:		≤ 2.0	≤ 2.0	≤ 1.00	≤ 5.0	NONE		
Cotton								
(J-1)	9-oz. Jersey	30+	--	--	100	--	No	Consumed
(C-1)	10-oz. Canvas	30+	--	--	100	--	No	Consumed
Leather								
(L-1)	Palm Leather	0	0	v. slight	3.2	v. slight shrinking	Yes	--
(L-1)	Knuckle Leather	0	0	v. slight	2.9	v. slight shrinking	Yes	--
(L-2)	Palm Leather	0	0	0.50	0.5	v. slight shrinking	Yes	--
(L-3)	Palm Leather	0	0	v. slight	3.8	v. slight shrinking	Yes	--
(ANOL-1a)	Palm Leather	0	0	slight	4.6	v. slight shrinking	Yes	--
(ANOL-1a)	Aluminized Nomex Back	1.6	32	3.25	11.0	melting	No	Consumed
Vinyl								
(V-1)	Vinyl impregnated cotton with foam insulation (from palm of glove)	30+	--	--	100	--	No	Consumed
(V-1)	Vinyl impregnated cotton with foam insulation (from back of glove)	30+	--	--	100	--	No	Consumed

TABLE 9 (Continued)
FLAME RESISTANCE TEST RESULTS
CURRENTLY-USED FIREFIGHTERS' GLOVES

GLOVE IDENTIFICATION		DATA FOR FLAME EXPOSURE					CRITERIA RATING	
(Code)	Brief Description	After Flame Time (sec)	After Glow Time (sec)	Char Length (inches)	Percent Consumed	Observations of Melting, Dripping, Shrinking, etc.	Pass	Primary Failure
PERFORMANCE CRITERIA:		≤ 2.0	≤ 2.0	≤ 1.00	≤ 5.0	NONE		
Vinyl								
(V-2)	Vinyl coated cotton with foam insulation (from palm of glove)	2.0	0	3.00	2.6	Surface Melt	No	Char
(V-2)	Vinyl coated cotton with foam insulation (from back of glove)	2.0	0	4.00	2.9	Surface Melt	No	Char
(V-3)	Vinyl coated cotton with foam insulation (from palm of glove)	0.6	0	3.00	2.8	Surface Melt	No	Char
Natural Rubber								
(NR-1)	Natural rubber latex (from palm of glove)	30+	--	--	100	Melting, Dripping	No	Consumed
(NR-2)	Natural rubber coated cotton (from palm of glove)	0	0	0.75 (slight scorch)	1.2	None	Yes	--
Neoprene								
(NE-1)	Neoprene coated flannel (from palm of glove)	0	0	0	0.9	None	Yes	--

Note: Underline (xxxxxxxx) = surface exposed to flame

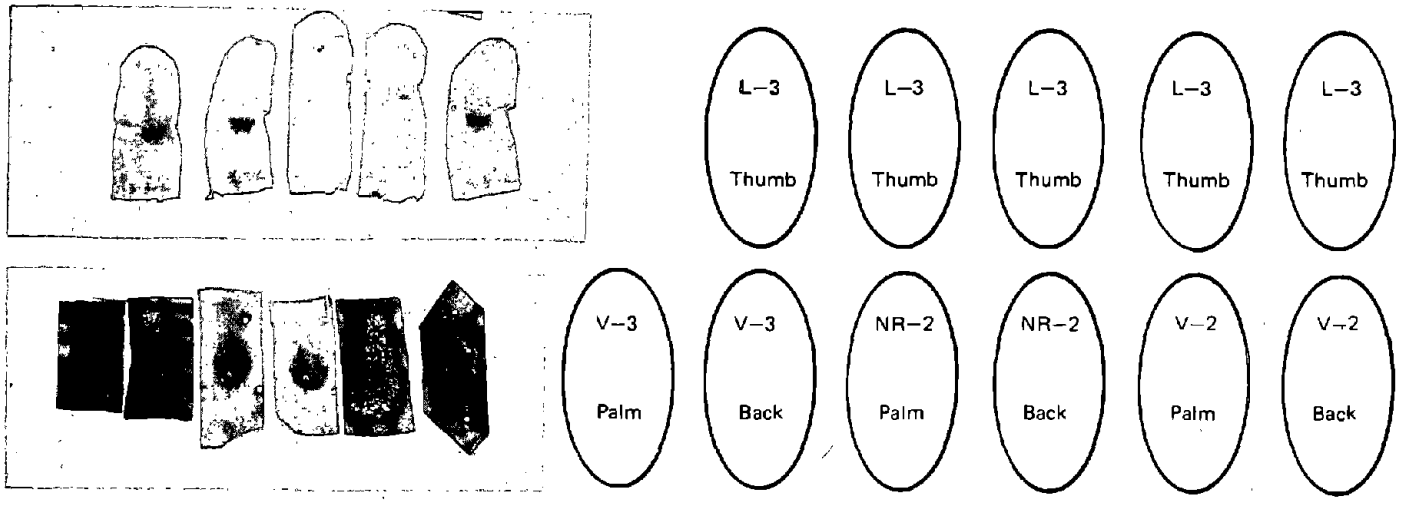

GLOVE IDENTIFICATION

Code	Brief Description
(L–3)	Thumb Leather Without Backing
(V–2)	Vinyl-Coated Cotton with Foam Insulation from Palm and Back of Glove
(V–3)	Vinyl-Coated Cotton with Foam Insulation from Palm and Back of Glove
(NR–2)	Natural Rubber-Coated Cotton from Palm and Back of Glove

FIGURE 18 GLOVE MATERIALS AFTER FLAME EXPOSURE

E. DURABILITY

The durability or service life of gloves is of interest for two reasons. First, deterioration of protective properties could expose a firefighter to hazards. It has been demonstrated that substantial deterioration can take place with some glove types after just a few hours of use in severe heat or excessively wet conditions.

Second, the economics of gloves relate directly to service life. Firefighters tend to discount benefits in protection by placing emphasis on reducing both the inconvenience and the costs of frequent glove replacement. A short service life will quickly discourage acceptance of a glove, regardless of protection. Therefore, attention is focused on assuring a suitable service life as evidenced by retaining glove performance levels during use. The economics suggested by a cost/benefit analysis of glove costs versus service life automatically become more favorable for a more durable glove.

1. Firefighting Conditions

Firefighters' gloves are exposed to a range of conditions which influence their service life. Gloves are repeatedly exposed to natural ultraviolet radiation, heat, cold, rain and snow. More importantly, they are continually exposed to alternating and fluctuating amounts of heat, water, abrasion and other mechanical abuses of a fire. A firefighter is continually handling burning objects and debris, using tools such as axes and picks, hauling hose, and climbing ladders. His gloves, whether wet or dry, are in contact with flame, torn at and cut, and raked through dirt and mud.

Because of a firefighter's duty cycle, he and his gloves can be subjected to these exposures for two hours at a time, twice a day, three or four days each week. Some wear also is imposed on fabric gloves by periodic laundering or dry cleaning. The best of the gloves currently used by firefighters remain useful for approximately six months under such conditions.

2. Parameters Influencing Durability

To clearly specify glove durability requires a distinction among the several terms used:

- *Service Life or Durability* – Both of these terms define the overall life of gloves under the conditions of use. In most circumstances, this includes wear; however, other use-oriented characteristics can be included. For example, if visibility were of primary importance, it would be appropriate to include a requirement for material color-fastness and luster-retention.

- *Wear* – This term is more confining than durability in that it describes the deterioration of gloves under the effects of abrasion, flexing, stretching, heat, water, laundering, etc.

- *Abrasion Resistance* – This is the single most important component of wear resistance.[51] It reflects the resistance of gloves to rubbing or wearing away of the surface by attrition and excludes all other destructive influences such as puncture and cut.[52]

Normal weathering does not seriously degrade most glove materials and can be eliminated as an important parameter. However, the repeated wetting and drying cycles because of rain as well as extinguishing water do influence glove life. Exposure to solar radiation can affect some plastic-coated materials in the long term by breaking down the molecular structure, but this is not significant. Glove properties can be expected to change most with the repeated heat and mechanical abuses of firefighting. Repeated laundering or dry cleaning usually affects the durability of fabrics and normally should be of concern. However, wear or aging of firefighters' gloves because of these maintenance processes is minimal because they occur so seldom during a glove's service life.

The most effective technique for measuring the durability of firefighters' gloves is to expose gloves to actual in-service conditions and observe the changes in properties. Such service testing is usually impractical because of the difficulty in achieving reproducible test conditions and the weeks needed to conduct each test. Therefore, most fabric durability tests are run with simulated service conditions in a manner which accelerates actual wear or aging. The final results are correlated with actual service data.

Since abrasion is a most important degradative wear mechanism, most simulations of wear are based on abrasion testing. Changes in the physical properties of materials – such as a loss in strength, a decrease in thickness, a loss of luster and a loss in weight – are used to establish the effects of abrasion.

3. Glove Durability

To demonstrate adequate durability, firefighters' gloves – including the wrist construction – should withstand cycles of exposure to water, dry heat and abrasion. Dry heat at elevated temperatures simulates fire conditions and accelerates the aging process of most materials. Moreover, dry heat in combination with water provides for a simulation of the actual wetting/drying cycles of gloves in service.

Each exposure cycle, intended to represent a week of service, is defined in the following manner:

Exposure Condition	Exposure Time
Water at 65-75°F (18-24°C)	20 minutes
Dry heat at 300°F (149°C),	10 minutes
then at 150°F (66°C)	20 minutes
Abrasion by 2 traversals in each of two directions at right angles to each other,* using 30 or 36-Grit emery cloth, at 4 psi pressure.	–

Each glove construction should be exposed to 24 of these cycles, corresponding to the six-month glove service life of the best of the currently used firefighters' gloves.

After exposure to the proper number of cycles, each glove construction should still meet the performance criteria for dexterity and resistance to flame, thermal energy penetration, and liquid penetration. Each glove should also meet 80% of the performance levels specified by the criteria for resistance to puncture and cut. If portions of a proposed glove contain seams or any unusual protrusions, these should be monitored closely for early breakdown. Gloves should be exposed to the cycles intact, but be disassembled at the conclusion of exposure to accommodate final performance testing.**

F. DRYING

For both his comfort and ability to function, a firefighter should start each fire response with completely dry gloves.

1. Firefighting Conditions

Firefighters' gloves are continually in contact with water at a fire scene. Water wets a glove's outer surface and occasionally leaks inside at the wrist or simply penetrates through the shell materials. Perspiration also wets and is absorbed by the inner materials. Drying the inside of gloves after use has been found to be difficult for impermeable constructions, such as those using vinyl, natural rubber, and neoprene shells. The outer surfaces dry, but the inner materials often take many hours to dry if they do at all.

2. Glove Drying

Good judgment suggests that gloves should dry easily, both inside and outside, in three hours or less at ambient conditions.*** Gloves should be designed so that air can circulate easily within a glove; and the inner materials should be chosen so that they give up absorbed water readily.

*This number of abrasive passes, or traversals, was based on data obtained from Reference 43.

**A detailed description of a test method for durability is provided in Part II, Section II-J of this report.

***To be considered dry, a glove should return to within 10% of its weight before wetting.

As this criterion may be difficult to achieve in practice, it is presented as a recommendation for good design.

G. VISIBILITY

Highly visible turnout gear is strongly recommended to allow detection of firefighters during smoky fires as well as during nighttime operations. A firefighter's safety could depend upon his ability to be seen both during difficult firefighting situations and, especially, in the event of an accident at a fire scene. Glove visibility is not as critical as turnout coat visibility; however, it is a relevant aspect of glove design.

1. Parameters Influencing Visibility

There appears to be no generally accepted method for evaluating the visibility of three-dimensional objects under specified lighting conditions. For a given observer, visibility of an object is a complex function of the object's size and brightness, its contrast with the surroundings, and the time available for making an observation.[53] Therefore, most available visibility data are subjective and are based on visual comparisons among colors. For example, colors such as lime-yellow are reported to be high in both brightness and contrast when illuminated under daylight and nighttime conditions. Subjective fire-service tests also indicate that lime-yellow is a very effective color for improving the visibility of rolling fire apparatus.[54] Moreover, the results of tests reported by Utech suggest that yellow and white are more visible colors for turnout coats than red or black.[39] Utech also suggests that the use of reflectorized tape or yellow or white tape is a reasonable technique for increasing turnout coat visibility.

In addition, the capacity of highly visible colors for reflecting radiant thermal energy in addition to the energy of visible wavelengths can provide an extra increment of protection for the firefighter. Such thermal reflectance is especially important for gloves because the hands are often the closest part of the body to a flame.

2. Glove Visibility

It is recommended that firefighters' gloves be made as visible as possible through use of lime-yellow or reflectorized light-colored components. One suggested technique for achieving high visibility is the application of lime-yellow tapes to the knuckle area of the backs of gloves.

IV. DESIGN CONSIDERATIONS

Two glove design considerations – glove sizing and wrist construction – are included because of their direct impact on glove performance. No other design parameters have been reviewed or evaluated – these considerations are best left to individual glove manufacturers.

A. GLOVE SIZING

Glove sizing or fit has been identified as having a strong influence on both dexterity and glove comfort. As a result, the generally poor fit afforded by the sizes of gloves currently used by firefighters, which are commercially available work gloves, contributes to hand injuries. This is because firefighters occasionally discard their gloves in firefighting situations to either allow greater dexterity or reduce discomfort.

1. Problems Relating to Poor Fit

Some common problems encountered with the fit of commercially available work gloves are:

(1) Fingers

- Excess finger length diminishes the firefighter's ability to pick up objects or manipulate controls, dials, etc.
- Not enough finger length results in poor overall fit with the palm of the glove moved up over the crotch of the fingers. This restricts the natural flexing of all four fingers.
- Too tight fingers are uncomfortable. When tightness is caused by an internal seam, the skin can be abraded raw during glove use.

(2) Thumb

- Excess thumb length diminishes the firefighter's ability to pick up objects or manipulate controls, dials, etc.
- When the thumb crotch seam is misplaced from the actual thumb crotch, flexing of the entire thumb is restricted.

(3) Palm

- When the palm does not extend down to the wrist crease, flexing at the wrist is impaired.

- When the palm has excess material, grasping manipulations with the entire hand are hindered because the material tends to "bunch up" in the palm.

(4) Wrist

- A loose-fitting wrist often gives the feeling that a glove is going to fall off.

(5) Overall Fit

- A loose-fitting glove is generally sloppy to work with. A firm grip is difficult to attain – or at least the wearer thinks it is. It is easier for water and debris to work their way inside a loose glove.

- An overly tight glove is generally hot and uncomfortable, and causes excess perspiration to develop.

The ideal glove would "coat" the hand and be, in essence, a second skin with good fit and flexure at the hand and finger joints. Existing work gloves usually do not possess these ideal traits. Poor overall fit results in a sloppiness that negates sensory characteristics of the hand and often results in an inflexibility that does not allow use of the natural grasping ability of the hand. As the U.S. Army Quartermaster Corps observed:

> "The concept of function of this handwear, maximizing what the man can do wearing this glove, is clearly given third place if it is considered at all. The point is that workers will not pay very much for a glove, and hence, it must be cheap and durable; whether he can bend his fingers while wearing the glove, or whether his hands become fatigued from 'working against' the glove, appears to receive little consideration in work glove design."[55]

Manufacturers have stated that they receive few complaints about glove sizing; however, this can be explained by the fact that most customers are more concerned with purchasing a passable product for the least cost. And the customer is often a purchasing agent rather than the glove user.

2. Industry Sizing Practices

The work glove manufacturing industry's approach to glove sizing is based mostly upon tradition and past experience. Glove design is considered to be a complex art requiring trial and error by craftsmen whose skills derived from the early development of the industry in the United States.

The industry has been very protective of information about design and sizing methods. However, contacts with six of the primary work glove manufacturers* in the United States, a glove designer, and the Natick Research Laboratories of the U.S. Army have confirmed that gloves are sized according to a traditional trial-and-error method.

Although anthropometric data for hands is available, it is either not used at all or used only as a general guideline with little attempt to correlate specific dimensions with occupational populations (for example, in making molds and patterns). Most of the anthropometric data used appears to have been generated in the 1940's and early 1950's by the military; more recent data seems not to have been assimilated into the industry's sizing methods.[5 6] One manufacturer stated that he has no need for new anthropometric data because he feels the existing information is complete enough.

a. Current Procedures

The trial-and-error sizing procedure outlined below is considered to be representative of industry practice:

- Define the glove application.
- Determine materials to be used.
- Estimate the sizes to be used. (This appears to be generalized by men's or women's "averages" rather than by a specific anthropometric study aimed at the target occupation.)
- Based on experience, select a manufacturing hand form or pattern with the nearest acceptable dimensions and then manufacture samples.
- Check sizing by trying sample gloves on a minimum of 100 people (not necessarily people in the target occupation) and recording their hand sizes and comments.
- Revise the hand forms as necessary and manufacture new samples.
- Test market.

No truly scientific approach to glove sizing appears to have been developed and put into general use.

*Globe Manufacturing Company, Edmont Wilson, Goodluck Glove Co., David's Gloves (Boss), Fyrepel Products, Inc., Advance Glove Manufacturing Co.

b. Available Sizes

Originally, gloves were sized by the combination of a simple measurement and experience – a method which was developed in Europe and is still used by dress glove manufacturers in the United States. In fact, dress sizes are determined by a measuring tape called a "French rule." The only hand measurement taken is the circumference of the palm. Finger lengths are determined by "feel," or "know-how." Figure 19, prepared by the National Association of Glove Manufacturers, Inc., shows dress glove sizes. It is the standard for the dress glove industry. Glove sizes are correlated with sex, height, and weight. At some point in past history, the sizes shown were determined by "French rule" and have not been updated since.

This limited number of measurements is not sufficient for "fixing" overall glove sizes. In fact, gloves marketed as being of the same size, material, and configuration quite often display varying dimensions, especially if they have been manufactured by different companies. This is because glove sewing is still a hand operation; only in dipping is the size determined by molds.

Manufacturers' literature indicates that work gloves are sold in small (sometimes extra small), medium, and large (sometimes extra large) sizes as well as occasionally in single size designations, such as men's and women's, and in dress glove sizes. A correlation exists between the small, medium, and large sizes and dress glove sizes. This is also given in Figure 19. The men's size corresponds to a large and the women's size either to a medium or small. It is evident that all other size designations also revert back to the dress glove size format – a format which has no sound, up-to-date anthropometric basis that takes into account more than one of the multitude of hand dimensions.

Hand sizes have been changing gradually over the last century but the industry's acknowledgement of this fact is simply that they have been selling more large-size gloves in recent years. Glove sizes typically have not been modified to accommodate the changes in the hand sizes of the population.

One manufacturer stated that his medium size will fit, and is sold to, 90% of his customers. This suggests a very sloppy or tight fit for many people and contradicts the hand size distribution of the general population, as implied by Figure 19's description of the size range contained in a dozen pairs.

The trend seems to be toward using only a single size for work gloves. This is a direct result of the poorer economics of producing and distributing multiple sizes.

3. Updated Anthropometry

The most current anthropometric data available should be used in establishing the proper overall glove size and the relative proportioning of each component. Moreover, where

MEN'S GLOVE SIZE CHART

Prepared by National Association of Glove Manufacturers, Inc., Gloversville, New York

Height	Weight													
	120-130	131-140	141-150	151-160	161-170	171-180	181-190	191-200	201-210	211-220	221-230	231-240	241-250	
5 Ft. 5' 4"	7½	7½	8	8	8	8½	8½	8½	8½					
5' 5" 5' 8"	7½	8	8	8	8½	8½	8½	9	9	9	9			
5' 9" 6 Ft.		8	8	8½	8½	8½	8½	9	9	9	9	9	9½	
6' 1" 6' 4"			8	8½	8½	8½	9	9	9	9	9½	9½	10	10+

The above chart covers the approximate range of sizes contained in a dozen pairs as follows:

Percent	8%	20%	32%	28%	8%	4%
Size	7½	8	8½	9	9½	10

Where letters are used to indicate sizes for unlined and lined gloves, use the following:

Small (S)	Medium (M)	Large (L)	Extra Large (XL)
7½–8	8½	9–9½	10–10½

SIZE	PALM CIRCUMFERENCE (inches)	(cm)	
7 1/2	7.97	20.25	
8	8.50	21.60	
8 1/2	9.03	22.95	← Estimated 50th Percentile
9	9.56	24.30	
9 1/2	10.09	25.65	
10	10.62	27.00	

FIGURE 19 GLOVE SIZES USED BY THE DRESS GLOVE INDUSTRY

possible, the anthropometric data should be representative of the target occupational group for which the gloves are intended.

a. Critical Hand Dimensions

In contrast to the traditional dimensions (palm circumference and finger lengths), the following groups of hand dimensions should be used for proper glove sizing and proportioning (Figure 20):

(A) Hand circumference – metacarpal
(B) Wrist circumference
(C) Length of digits 1-5 – fingertip to crotch level
(D) Length of digits 1-5 – fingertip to wrist crease.

These dimensions represent the minimum necessary to allow proper overall fit. Additional hand dimensions will reduce the number of inaccuracies, but do not appear to be as critical. These specific dimensions have been identified through a distillation of data presented in Garrett's work on anthropometry of the hands,[57] Kennedy et al.'s earlier referenced work on glove design,[55] and a review of the problems encountered with currently available work gloves.

b. Anthropometric Data

Garrett's report provides up-to-date (1969) anthropometric hand data of male and female Air Force flight personnel. This report is very complete in its tabulation of 38 hand dimensions. Table 10 reports this data for the four critical dimensions identified above. It is interesting that here the hand-circumference 50 percentile dimension is 21.51 cm, whereas the corresponding dimension in the dress glove format is estimated at just under 22.95 cm. The implication here is that if finger lengths were identical in both data sets, the dress glove sizing would provide a glove configuration too large through the palm area. (This may indicate that the dress glove measurement is not taken in the metacarpal region of the palm.) This problem is, in fact, common with work gloves.

In the absence of a special set of hand measurements for firefighters, this Air Force data appears to be the best available.

4. Glove Sizing

Both the overall technical vagueness of the work glove industry's methods and the diversity and apparent high incidence of size-related problems indicate that current glove sizing methods are unsatisfactory in meeting the firefighter's needs. Therefore, several aspects of these methods can and should be modified to provide better fitting gloves that are more comfortable and that flex easily.

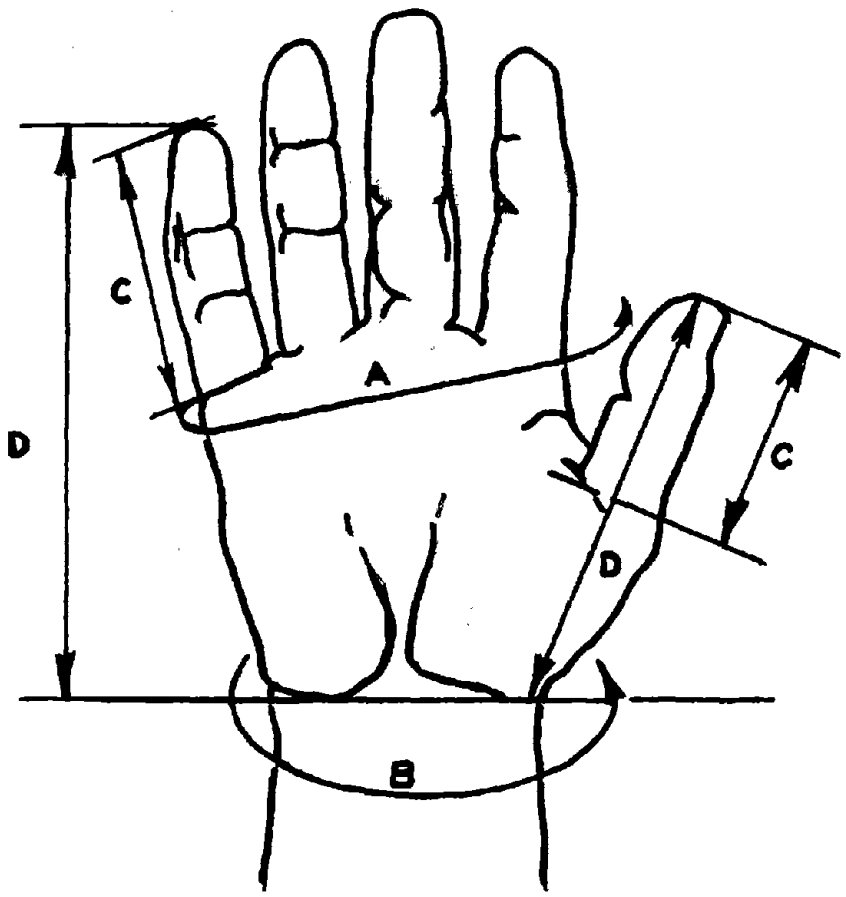

FIGURE 20 CRITICAL HAND DIMENSIONS

TABLE 10
ANTHROPOMETRIC DATA FOR CRITICAL HAND DIMENSIONS (MALE)

DIMENSION	Population Distribution - Percentiles*									
	15%		40%		50%		70%		95%	
	in.	cm	in.	cm	in.	cm	in.	cm	in.	cm
(A) Hand Circumference - Metacarpal	8.15	20.70	8.38	21.30	8.47	21.51	8.67	22.02	9.09	23.08
(B) Wrist Circumference	6.51	16.53	6.79	17.23	6.88	17.46	7.07	17.95	7.52	19.09
(C) Finger Length - Tip to Crotch:										
Thumb	2.12	5.39	2.27	5.76	2.31	5.88	2.41	6.12	2.59	6.57
First	2.77	7.03	2.91	7.39	2.96	7.52	3.06	7.77	3.23	8.19
Second	3.16	8.02	3.31	8.40	3.36	8.53	3.48	8.83	3.73	9.47
Third	2.98	7.57	3.10	7.87	3.15	7.99	3.26	8.28	3.52	8.93
Fourth	2.75	5.71	2.35	5.98	2.40	6.08	2.50	6.35	2.75	6.99
(D) Finger Length - Tip to Wrist Crease:										
Thumb	4.54	11.54	4.87	12.37	4.98	17.66	5.22	13.26	5.78	14.68
First	6.93	17.60	7.19	18.26	7.28	18.48	7.46	18.96	7.90	20.06
Second	7.33	18.62	7.56	19.20	7.65	19.43	7.87	19.98	8.28	21.04
Third	7.03	17.85	7.23	18.36	7.32	18.59	7.55	19.18	7.98	20.28
Fourth	6.21	15.77	6.43	16.34	6.51	16.54	6.71	17.04	7.13	18.10

*The percentile values for a particular set of data are treated as though plotted on normal probability graph paper.

a. Dimensions

Firefighters' gloves should be manufactured in a minimum of three sizes correlating with firefighters' hand dimensions. Glove size should be based on the four groups of critical hand dimensions illustrated in Figure 20. In order to comfortably fit as many firefighters as possible, sizes should correspond to the 15th, 50th, and 95th percentile data presented in Table 10, unless more current anthropometric data become available. If manufacturing economics are favorable, gloves should be manufactured in a minimum of four sizes, corresponding to the 15th, 40th, 70th, and 95th percentile data presented in Table 10.

b. Additional Considerations

Two additional factors which are obvious, but which have an impact on the final dimensions of a glove, are the materials and the construction techniques. If cut to identical patterns, a heavier material will be formed into a glove of smaller internal size than one of a lighter material because of the space occupied by the material. If bulky seams are sewn inside a glove, the effective size is again smaller because of the space taken up by the seams. These variations should be taken into account during size determinations.

B. WRIST CONSTRUCTION

Glove wrist constructions available to firefighters are generally inadequate for isolating and protecting hands and wrists from firefighting hazards.

1. Problems Relating to Wrist Constructions

The most frequent wrist problems encountered with gloves currently used by firefighters are wrist exposure to the fire environment and entry of water and debris into a glove.

a. Wrist Exposure

An analysis of the firefighters' hand and wrist injuries tabulated in Volume I reveal that up to 20% of the total injuries reported are inflicted on the wrist. This is surprisingly high, since the wrist is not directly involved in carrying out firefighting operations.

Burns make up 45% of the wrist injuries and are as important as cuts, lacerations and punctures. The wrist is the only anatomical region that has such an injury profile – one that is attributed to exposure of the skin to the many firefighting hazards.

b. Entry of Water and Debris

The lack of a tight interface between a glove and turnout coat sleeve allows easy entry of water and debris. Water is perceived as a concern primarily because it causes discomfort –

even though such suffering is still commonly accepted as unavoidable and "manly." However, water penetration does have other adverse effects:

- Water inside a glove reduces the effectiveness of thermal insulation.
- Hot water inside a glove can burn the skin.
- Water inside a glove can flash to cause scalding when a hot object is grabbed.
- Wet glove materials and seams abrade the skin (which is soft from water contact) on the hand.
- Wet glove materials often feel slippery and "clammy."
- Continued or repeated wetness hastens degradation of materials and structural components – such as sewing thread.

Entry by grit and dirt also causes skin abrasion and often outright pain.

2. Available Wrist Constructions

Rather than considering gloves alone, both glove wrists and turnout coat sleeves must be reviewed, because the interface between glove wrists and turnout coat sleeves is a primary weak point in firefighters' protective clothing. The wrist is usually covered by the combination of glove and turnout coat when the arm is stationary and not extended. However, when the arm is extended or raised during physical activity, the turnout coat sleeve pulls back and the wrist is often exposed. In fact, it has been estimated that firefighters spend nearly 50% of their firefighting time with arms extended or raised above shoulder level.[58] This provides ample opportunity for injury.

Gloves and coats are seldom designed and supplied as a matched set which work together. Instead, they are typically purchased at different times from different manufacturers.

a. Gloves

Most firefighters use inexpensive cotton, leather or vinyl work gloves. Wrist constructions attached to such gloves vary from narrow knitted wristlets to long, stiff gauntlets:

- *Knitted Wristlets* are tight fitting and prevent hot and cold air, embers and debris from entering a glove. They reduce, but do not eliminate, water flow into a glove. Most often, knitted wristlets extend only two or three inches from the wrist crease and leave the upper wrist exposed. Furthermore, knitted wristlets are often made of cotton and thus are first to degrade or rot from wet exposures.

- *Band (or slit-band) Cuffs* are usually stiff cotton wristlets that extend two or three inches from the wrist crease. They fit loosely – a shirt or light-coat sleeve can be tucked into them. Alone, they offer very little protection; liquids and other materials can enter freely.

- *Long and Short Gauntlets* are provided on many gloves – they represent the most popular wrist design. Typically, gauntlets flare back over the wrist and forearm, fitting outside the turnout coat sleeve. They offer protection against impact, water, embers and debris. However, when such a glove is in the "arm-down" position, the gauntlet acts as a funnel and scoops in hazardous materials. Once inside, hot materials can be trapped – this is a primary reason why firefighters perceive a need to don and, especially, doff these glove rapidly. If hot embers are trapped, a glove can be "snapped" off quickly.

b. Turnout Coats

Only two wrist coverings are built into turnout coat sleeves: sleeve cuffs and knitted wristlets.

- *Sleeve Cuffs* are designed with enough length to cover the entire wrist down to the wrist bone – but often not to the wrist crease as would be desirable for extended-arm protection. This protects the wrist from direct contact with most hazards as long as the arm is not extended. When the arm is extended or raised, the sleeve pulls back to expose more of the wrist. (One manufacturer provides a leather strap, sewn to the cuff and with a hole for the firefighter's thumb, as a means of restraining the sleeve.)

- *Knitted Wristlets* are often added to a sleeve cuff to keep hot and cold air, embers and debris from entering. Again, they reduce, but do not eliminate, water flow into a sleeve. When new, wristlets do assist in keeping the sleeve in its fully extended position during activity.

c. Other Wrist Protectors

Knitted wristlets or short sleeves (cuff-guards) are available to supplement gloves and turnout coat sleeves. These represent an additional clothing item to be put on and taken off, so they encounter substantial resistance to use. Moreover, they are of little value in preventing water entry into a glove or coat sleeve.

3. Purchasing Habits

Firefighters' gloves are typically off-the-shelf work gloves purchased by the individual firefighter and paid for out of a limited annual clothing allowance given by his department.*

Emphasis is put on low cost and personal preferences. Little regard is given to overall wrist protection or to matching a glove with a turnout coat sleeve. Drawstraps and buckles are not desired on gloves or cuffs, because they tend to catch on things. Additional details, such as specially designed, tight-fitting cuffs, which add to the cost, are not desirable.

Turnout coats are usually made to order either individually for a firefighter or in bulk for a department. The fire chief tends to specify the garment design, with the manufacturer in an advisory capacity. Steeped in tradition, he usually resists anything new, does not like to think about injury (or its prevention), and is directly accountable for expenditures. In addition, every fire department has its own prejudices about design details – not necessarily based on fact.

Manufacturers have indicated that there usually is little concern about water entering the coat at the wrist. Suggested improvements are often rejected by the firefighters because of conflict with features considered more important. Among these features, long-term comfort is often mentioned. The possibility of water entering coat sleeves is considered less detrimental to comfort than waterproof wristlets that may abrade the wrist after hours of wear.

Manufacturers typically disclaim adherence to any particular set of specifications or dimensions for turnout coats. They may attempt to influence purchase specifications, but do so with an awareness that they are not really in the education business.

4. Glove Wrist Construction

As has been shown, little attention has been paid to insuring wrist protection against firefighting hazards. The existing glove and turnout coat sleeve designs are not compatible and therefore offer little protection. As long as there continues to be an open interface between glove and sleeve, this problem will continue.

If they are to provide isolation from and protection against firefighting hazards, gloves should be designed to provide:

- An impermeable wrist closure to keep water and debris from entering;

*This practice gradually is being eliminated. The International Association of Firefighters (IAFF) is requiring that all newly negotiated contracts contain a provision for department-supplied protective clothing – including gloves.

- A wrist covering which will resist liquid penetration and other fire-fighting hazards; and,

- An impermeable interface with the turnout coat sleeve.

The combination of glove and sleeve should completely isolate the firefighter's hand, wrist and forearm from the fire environment. This requires a consideration of the sleeve construction as well as glove wrist construction.

V. GLOVE CLASSIFICATIONS

The quantitative criteria which have been developed here are applicable, for the most part, to all firefighters' gloves. The exceptions to this statement are the criteria developed for resistance to heat penetration. The three task-oriented resistance levels for radiant thermal energy clearly provide for three distinct glove classifications. Accordingly, separate gloves can be described for engine company firefighters, ladder company firefighters and rescue company firefighters.

Ideally, one glove should be sufficient for all firefighters, regardless of their duties. However, considering the current status of materials technology and glove manufacturing, the concept of one glove cannot be realized for some time. The three-part classification system allows for technological and economic trade-offs without compromising protection. Table 11 summarizes this concept.

TABLE 11
FIREFIGHTERS' GLOVE CLASSIFICATIONS

APPLICABLE CRITERIA \ GLOVE CLASSIFICATION	ENGINE (GENERAL PURPOSE)	LADDER (PROXIMITY)	RESCUE (ENTRY)
Hand Protection			
Resistance to cut	X	X	X
Resistance to puncture	X	X	X
Resistance to heat	X	X	X
• Routine	•		
• Hazardous		•	
• Emergency			•
Resistance to "wet" heat	X	X	X
Resistance to cold*	•	•	•
Resistance to electricity	X	X	X
Function			
Dexterity	X	X	X
Resistance to liquids	X	X	X
Comfort	X	X	X
Resistance to flame	X	X	X
Durability	X	X	X
Drying	X	X	X
Visibility	X	X	X
Design			
Sizing	X	X	X
Wrist construction	X	X	X

*This is applicable to gloves used in winter conditions.

VI. APPENDICES

APPENDIX

A GLOVES USED FOR PERFORMANCE TESTING

B REFERENCES

A. GLOVES USED FOR PERFORMING TESTING

A discussion about the gloves currently used by firefighters is presented in Volume I, Section II-D. Representative samples of each glove type were selected for testing in this program. Table A-1 provides a description of each of these gloves along with the coding scheme referenced throughout the test data in Volume II.*

*The manufacturers of each glove are identified in a separate memorandum provided with this report.

TABLE A-1

GLOVES CURRENTLY USED BY THE FIRE SERVICES

Category	Code	Type	Style		
			Cut	Wristlet	Size
Cotton	(J-1)	9-oz Jersey	Clute	2-1/2 in. knit	Men's
	(C-1)	10-oz Canvas	Clute	2-in. knit	Men's
Leather	(L-1)	Cotton back with leather palm, palm side of fingers and knuckle strap	Gunn	Short gauntlet	Medium
	(L-2)	Cotton back with leather palm, palm side of fingers and knuckle strap	Gunn	Short gauntlet (safety cuff)	Large
	(L-3)	Cotton back with leather palm	Clute	2-in. knit	Large
	(L-4)	Full leather ski mitten with foam insulation	Mitten	–	Men's
	(L-5)	Leather back, palm, and fingers	Gunn	Short gauntlet (safety cuff)	Men's
	(L-6)	Cotton back with leather palm, palm side of fingers and knuckle strap	Gunn	Short gauntlet (safety cuff)	Men's
	(L-7)	All leather (deer hide)	Gunn	Slip-on	Men's #9

TABLE A-1 (Continued)

Category	Code	Type	Style		
			Cut	Wristlet	Size
	(L-8)	Cotton back with leather palm, palm side of fingers and knuckle strap	Gunn	Kit	–
	(ANOL-1a)	Aluminized Nomex back with leather palm	Clute	Knit	Men's
	(ANOL-1b)	Aluminized Nomex back with leather palm	Clute	3-in. gauntlet	Men's
Vinyl	(V-1)	Vinyl impregnated cotton with foam insulation	Gunn	Knit	Large
	(V-2)	Vinyl coated cotton with foam insulation	Clute	Short gauntlet (safety cuff)	Men's
	(V-3)	Vinyl coated cotton with foam insulation	Clute	2-1/2 in. knit	Men's
	(V-4)	Vinyl coated cotton with thermal lining	Clute	Knit	–
	(V-5)	Vinyl coated cotton	–	Knit	–
Wool	(W-1)	Fisherman's Mittens	Mitten	–	Jumbo
Natural Rubber	(NR-1)	Natural rubber latex	–	Extended length	Large
	(NR-2a)	Natural rubber coated cotton	Clute	Knit	Large

TABLE A-1 (Continued)

Category	Code	Type	Style		
			Cut	Wristlet	Size
	(NR-2b)	Natural rubber coated cotton	Clute	Short gauntlet (safety cuff)	Large
	(NR-3)	Natural rubber coated cotton with "Rubber Dust"	–	Knit	–
Neoprene	(NE-1)	Neoprene coated flannel liner	Clute	4-in. gauntlet	–
	(NE-2)	Neoprene coated cotton	–	Knit	–
	(NE-3)	Neoprene coated cotton with foam insulation	Clute	Knit	–

B. REFERENCES

1. Sorrells, J.R., and R.E. Berger, "Some Cutting Experiments on Human Skin and Synthetic Materials," Report No. NBSIR 73-262, National Bureau of Standards, Department of Commerce, Washington, D.C., 1973.

2. McGuire, B.J., and J.D. Moore, "The Skin Puncture Potential of Points Associated with Certain Toys," Report No. NBS 10,839, National Bureau of Standards, Department of Commerce, Washington, D.C., 1972.

3. McGuire, B.J., J.R. Sorrells, and J.D. Moore, "Resistance of Human Skin to Puncture and Laceration," Report No. NBSIR 73-123, National Bureau of Standards, Department of Commerce, Washington, D.C., 1973.

4. Viljanto, J., "Tensile Strength of Healing Wounds", Chapter 13, *Biophysical Properties of the Skin,* Interscience Publishers, New York, 1971.

5. Sorrells, J.R., and R.E. Berger, "An Inspection Procedure for Detecting Hazardous Edges," Report No. NBSIR 74-428, National Bureau of Standards, Department of Commerce, Washington, D.C., 1974.

6. Rieser, R.G., and J. Chabal, "Safety Performance of Laminated Glass Configurations," Report No. 670912, Glass Research Center, Pittsburgh Plate Glass Co., 1967.

7. Nahum, A.M., C.W. Gadd, D.C. Schneider, and R.G. Madeira, "Tolerances of Superficial Soft Tissues to Injury," *The Journal of Trauma,* Vol. 12, No. 12, 1973.

8. Private Communication with I. Fishbein of the Safety Razor Division, the Gillette Corporation, on June 30, 1975.

9. Mahajan, B.M., "Analysis of Injury Potential of Projections When Impacted by a Falling Person," Report No. NBS 10,906, National Bureau of Standards, Department of Commerce, Washington, D.C., 1972.

10. Peterson, F.J., W.A. Lange, and C.W. Gadd, "Tear and Tensile Strength of Human Skin Under Static and Dynamic Loading," American Society of Mechanical Engineers, Paper No. 72- WA/BHF-6, 1972.

11. Gadd, C.W., W.A. Lange, and F.J. Peterson, "Strength of Skin and Its Measurement," American Society of Mechanical Engineers, Paper No. 65- WA/HUF-B, 1965.

12. Tregear, R.T., *Physical Functions of The Skin,* Academic Press, New York, 1966.

13. Utech, H.P., "Measurement – Key to Equipment Improvement," The Second Symposium on Occupational Health and Hazards of the Fire Service, University of Notre Dame, Notre Dame, Indiana, April 16-18, 1973.

14. Simms, D.L. and P.L. Hinkley, "Protective Clothing Against Flames and Heat," Fire Research Special Report No. 3, Joint Fire Research Organization, London, 1960.

15. Derksen, W.L., T.I. Monahan, and G.O. Delherz "The Temperatures Associated with Radiant Energy Skin Burns," *Temperature, Its Measurement and Control in Science and Industry, Vol. 3, Part 3, Biology and Medicine,* Reinhold Publishing Co., 1963.

16. Morse, H.L., and J.G. Thompson, "Analysis of the Thermal Response of Protective Fabrics," Technical Report AFML-TR-73-17, Air Force Materials Laboratory, Wright-Patterson Air Force Base, Ohio, January, 1973.

17. Henriques, F.C., and A.R. Moritz, "Studies of Thermal Injury: I, The Conduction of Heat to and through Skin and the Temperatures Attained Therein. A Theoretical and an Experimental Investigation," *American Journal of Pathology,* Vol. 23, 1947.

18. Henriques, F.C., and A.R. Moritz, "Studies of Thermal Injury: II, The Relative Importance of Time and Surface Temperature in the Causation of Cutaneous Burns," *American Journal of Pathology,* Vol. 23, 1947.

19. Moritz, A.R., "Studies of Thermal Injury: III, The Pathology and Pathogenesis of Cutaneous Burns. An Experimental Study," *American Journal of Pathology,* Vol. 23, 1947.

20. Henriques, F.C., "Studies of Thermal Injury: V. The Predictability and the Significance of Thermally Induced Rate Processes Leading to Irreversible Epidermal Injury," *Archives of Pathology,* Vol. 43, 1947.

21. Buettner, K., "Effects of Extreme Heat and Cold on Human Skin: I, Analysis of Temperature Changes Caused by Different Kinds of Heat Application," *Journal of Applied Physiology,* Vol. 3: No. 12, June, 1951.

22. Buettner, K., "Effects of Extreme Heat and Cold on Human Skin: II, Surface Temperature, Pain and Heat Conductivity in Experiments with Radiant Heat," *Journal of Applied Physiology,* Vol. 3: No. 12, June, 1951.

23. Buettner, K., "Effects of Extreme Heat and Cold on Human Skin: III, Numerical Analysis and Pilot Experiments on Penetrating Flash Radiation Effects," *Journal of Applied Physiology,* Vol. 5, November, 1952.

24. Stoll, A.M., and L.C. Greene, "Relationship between Pain and Tissue Damage due to Thermal Radiation," *Journal of Applied Physiology,* Vol. 14, No. 3, 1959.

25. Stoll, A.M., and M.A. Chianta, "Burn Production and Prevention in Convective and Radiant Heat Transfer," *Aerospace Medicine,* Vol. 39, October, 1968.

26. Stoll, A.M., "Heat Transfer in Biotechnology," *Advances in Heat Transfer,* Academic Press, 1967.

27. Stoll, A.M. and M.A. Chianta, "Method and Rating System for Evaluation of Thermal Protection," *Aerospace Medicine,* Vol. 40, November 1969.

28. Private Communication with A.J. McQuade of the U.S. Army Natick Laboratory, October 17, 1974.

29. Meryman, H.T., "Tissue Freezing and Local Cold Injury," *Physiological Review,* Vol. 37, 1957.

30. Stoll, A.M., "Heat Transfer in Biotechnology" In: *Advances in Heat Transfer,* Academic Press, 1967.

31. Carter, J.M., and A.G. Bevin, "Frostbite of the Extremities," *North Carolina Medical Journal,* Vol. 31, 1970.

32. Mills, W., W.E., Switzer, and J.A. Moncrief, "Electrical Injuries," *Journal of The American Medical Association,* Vol. 195, No. 10, March 7, 1966.

33. Peterson, R.A., "Electrical Burns of the Hand," *Journal of Bone and Joint Surgery,* Vol. 48-A, No. 3, April, 1966.

34. Dalziel, C., and W.R. Lee, "Lethal Electric Currents," *IEEE Spectrum,* February, 1969.

35. Dalziel, C., "Electric Shock Hazard," *IEEE Spectrum*, February, 1972.

36. Friedlander, G., "Electricity in Hospitals: Elimination of Lethal Hazards," *IEEE Spectrum,* September, 1971.

37. Dalziel, C., "Transistorized Ground-Fault Interrupter Reduces Shock Hazard," *IEEE Spectrum,* January, 1970.

38. "Specification for Clothing for Protection Against Intense Heat for Short Periods," British Standard No. 3791: 1970.

39. Utech, H.P., L. Fourt, and N.R.S. Hollies, "The Firefighter's Turnout Coat: A Design Analysis," *Journal of Safety Research,* Vol. 6, No. 1, March, 1974.

40. "Water Repellency: Spray Test," AATCC Test Method 22 – 1971. *AATCC Technical Manual* Vol. 48, 1972.

41. ASHRAE Handbook of Fundamentals, New York, American Soc. of Heating, Refrigerating and Air-Conditioning, 1972.

42. Schwarz, E.R., "Technical Evaluation of Textile Finishing Treatments," *Textile Research Journal,* Vol. 9, 1939.

43. Kaswell, E.R., *Textile Fibers, Yarns and Fabrics,* Reinhold Publishing Company, New York, 1953.

44. Rohles, F.H., Jr. and R.G. Nevins, "Thermal Comfort: New Directions and Standards," *Aerospace Medicine,* Vol. 44, No. 7, 1973.

45. Berenson, P.J., and W.G. Robertson, "Temperature" In: *Bioastronautics Data Book,* NASA, 2nd Edition, 1973.

46. Iampietro, P.F., "Use of Skin Temperature to Predict Tolerance to Thermal Environments," *Aerospace Medicine,* Vol. 42, No. 4, 1971.

47. Goldman, R.F., "Clothing Design for Comfort and Work Performance in Extreme Thermal Environments," *Transactions, New York Academy of Sciences,* 1974.

48. "Absorbency of Bleached Woven Cloth," AATCC Test Method 79-1972. *AATCC Technical Manual,* Vol. 48, 1972.

49. Givoni, B., and R.F. Goldman, "Predicting Metabolic Energy Cost," *Journal of Applied Physiology,* Vol. 30, No. 3, 1971.

50. Simms, D.L., "The Design of Test Methods for Industrial Fabrics for Protection Against Fire," *Textile Institute and Industry,* Vol. 4, No. 2, February, 1966.

51. Mann, J.C., "The Testing of Fabrics for Resistance to Abrasion," *Journal of the Textile Institute,* Vol. 28, 1937.

52. Hamburger, W.T., "Mechanics of Abrasion of Textile Materials," *Textile Research Journal,* Vol. 15, 1945.

53. Luckiesh, M., and F.K. Mass, *The Science of Seeing,* D. Van Nostrand Company, New York, 1937.

54. "What's Wrong with Red and Black? " *National Safety News,* June, 1974.

55. Kennedy, S.J., R.L. Woodbury, H. Madnick, "Design and Development of Natural Hand Gloves," Quartermaster Research and Engineering Command, U.S. Army, Clothing and Equipment Development Branch, Series Report No. 33, July 1962.

56. Private Communication with H. Madnick of the U.S. Army Natick Laboratory, October 30, 1974.

57. Garrett, J.W., "Anthropometry of the Hands of Male Air Force Flight Personnel," Aerospace Medical Division, Air Force Systems Command, Wright-Patterson Air Force Base, Ohio, AMRL-TR-69-42, March 1972.

58. "Improvement of Firemen's Turnout Coats for Greater Comfort and Effectiveness in Work," Harris Research Laboratories, Gillette Research Institute, NBS Contract 1-35757, December, 1971.

THE DEVELOPMENT OF CRITERIA FOR FIREFIGHTERS' GLOVES

VOLUME II – PART II: TEST METHODS

DISCLAIMER

The opinions, findings and conclusions expressed or implied in this report are those of Arthur D. Little, Inc. (ADL) and not necessarily those of the National Institute for Occupational Safety and Health (NIOSH). Mention of company or product names is not to be considered an endorsement by ADL or NIOSH.

TABLE OF CONTENTS – PART II

	Page
List of Figures	iv
I. INTRODUCTION	1
II. TEST METHODS	2
A. A TEST METHOD FOR RESISTANCE TO STATIC CUT	3
B. A TEST METHOD FOR RESISTANCE TO DYNAMIC CUT	11
C. A TEST METHOD FOR RESISTANCE TO STATIC PUNCTURE	17
D. A TEST METHOD FOR RESISTANCE TO DYNAMIC PUNCTURE	25
E. A TEST METHOD FOR RESISTANCE TO HEAT PENETRATION	31
F. A TEST METHOD FOR RESISTANCE TO ELECTRICITY	40
G. A TEST METHOD FOR DEXTERITY	44
H. A TEST METHOD FOR RESISTANCE TO WATER PENETRATION	47
I. A TEST METHOD FOR RESISTANCE TO FLAME	53
J. A TEST METHOD FOR DURABILITY	61

LIST OF FIGURES – PART II

Figure No.		Page
1	Static Cut Test Apparatus	4
2	Test Blade Holder	6
3	Test Blade	6
4	Material Specimen Support	7
5	Dynamic Cut Test Apparatus	12
6	Impact Rod and Blade Assembly	13
7	Static Puncture Test Apparatus	18
8	4d Penetrometer	20
9	Specimen Support Assembly	21
10	Support Plate	22
11	Template	22
12	Dynamic Puncture Test Apparatus	26
13	Impact Rod and Penetrometer Assembly	27
14	Radiant Energy Test Apparatus	33
15	Conductive Energy Test Apparatus	34
16	Material for Conductive Energy Test	35
17	Specimen Holding Fixture	35
18	Electrical Resistance Test Apparatus	41
19	Water Penetration Apparatus	48
20	Template	50
21	Vertical Flame Resistance Textile Apparatus	54
22	Glove Flame Resistance Test Apparatus	56
23	Relationship of Test Material to Bunsen Burner	57

I. INTRODUCTION

Few glove manufacturers test their products to insure that they meet the protective and functional needs of the glove user. Of 10 leading work glove manufacturers questioned, only three responded that they have any formal testing program. Even these programs are limited and consist mostly of evaluating glove resistance to cut and abrasion. There is no testing to evaluate resistance to puncture, resistance to heat penetration, resistance to flame or any of the other glove requirements which are important in firefighting.

A thorough review of published test methods from industry and government failed to identify any that are completely applicable to evaluating candidate firefighters' gloves. Therefore, it was necessary to design a number of test methods for this purpose. These text methods are described here in Part II of Volume II.

II. TEST METHODS

Ten test methods were designed for evaluating candidate firefighters' gloves in terms of the performance criteria developed in Part I of this volume. The test methods were structured to meet three objectives:

- That they duplicate firefighting conditions as closely as practical;
- That they be relatively straightforward and easy to set up; and
- That the data from each method relate directly to glove performance.

In the following pages, each test method and its associated equipment are described in the format used for Federal test method standards.

A. A TEST METHOD FOR RESISTANCE TO STATIC CUT

1.0 Scope

1.1 This test method determines the resistance to static cut by measuring the force required to cause a sharp-edged blade to cut the surface of a material specimen.

1.2 This test method defines the test procedure, test apparatus, blade dimensions, and the material specimen's size, conditioning and position on the apparatus.

2.0 Test Specimens

2.1 Each material specimen to be tested shall be a rectangle at least 2 in. (5.1 cm) by 4.5 in. (11.4 cm). Multiple cut attempts may be made on each specimen (see paragraphs 4.4.3 and 5.8.1).

2.2 Each specimen may consist of either a single layer or a composite which is representative of actual glove construction with all layers arranged in proper order. During the test, each specimen shall be oriented so that the normal outer surface is the first to be contacted by the edge of the blade.

2.3 Material specimens may be tested both dry and wet.

3.0 Number of Tests

3.1 Three specimens of each material shall be tested and two cuts made on each specimen. (See paragraphs 5.7 – 5.11.)

3.2 When it is necessary to evaluate both dry and wet specimens, three specimens of each shall be tested.

4.0 Test Apparatus

4.1 The static cut *Test Apparatus* shall consist of an "L"-shaped metal frame and a pivoted arm which lowers a sharp-edged blade onto a material specimen as shown in Figure 1.

4.4.1 A locking mechanism shall be mounted on the "L"-frame upright to engage the pivoted arm and secure it in a neutral position above the material specimen. The locking mechanism shall be used when the blade is being replaced or when the specimen is being moved into or from the testing position.

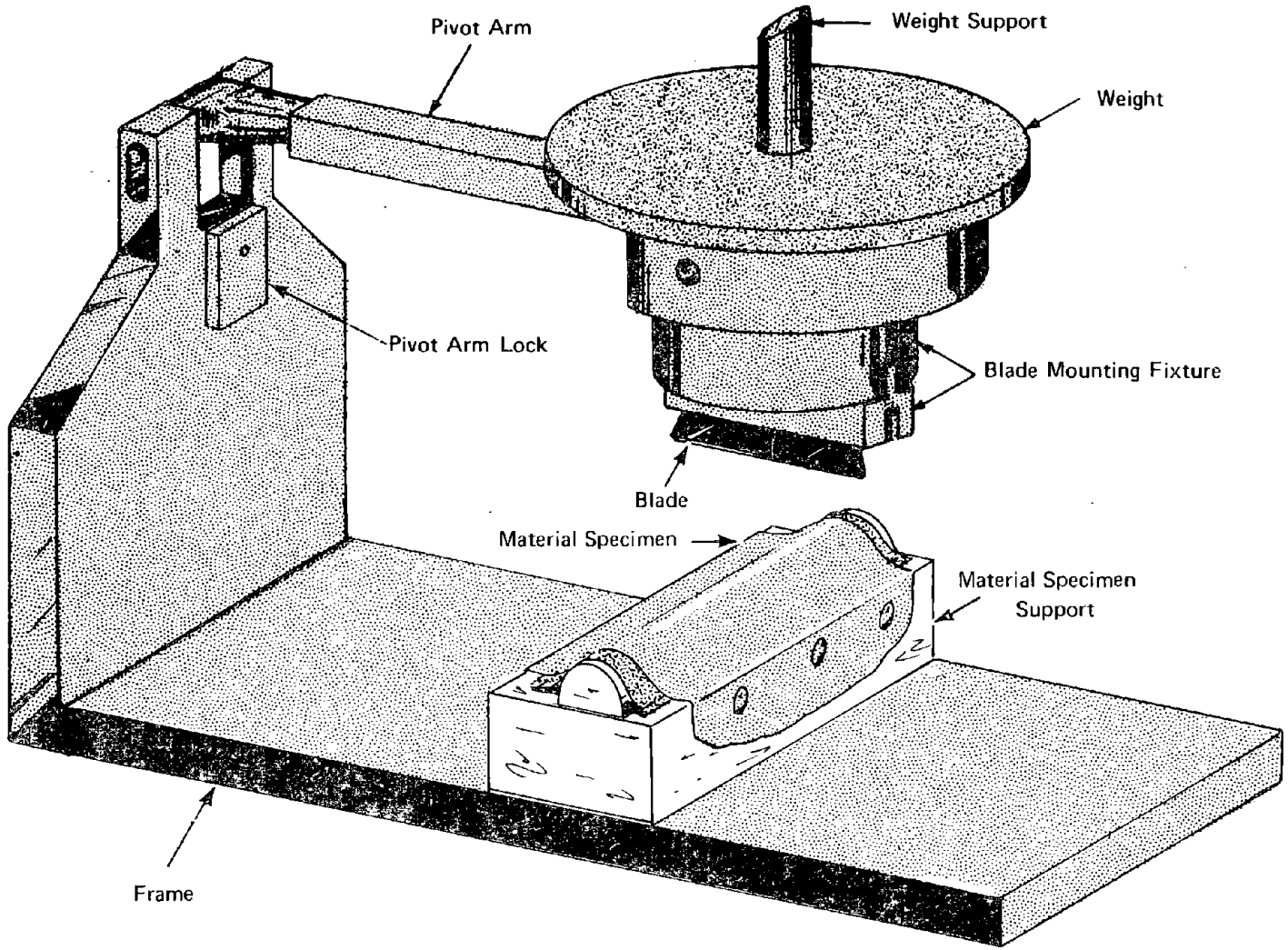

FIGURE 1 STATIC CUT TEST APPARATUS

4.2 The blade shall be mounted in a *blade holder* at the outer end of the pivoted arm, as shown in Figure 2. The blade is mounted so its sharp edge is tangential to the material specimen.

4.2.1 The pivoted arm shall be capable of supporting weights above the blade holder. Incremental weights of 2 lb (0.91 kg) each shall be supplied to allow a maximum force of 20 lb (9.1 kg) to be applied during testing. The pivoted arm, blade holder and blade together shall weigh 2 lb and and shall contribute to the force applied to the blade.

4.3 The *sharp-edged blade* shall be made of tool-hardened steel and shall have the dimensions shown in Figure 3.

4.4 The *specimen support assembly* shall consist of a 2 in. (5.1 cm) x 2 in. (5.1 cm) x 4 in. (10.2 cm) soft wood block and a 3/4 in. (1.9 cm) diameter, half-rounded soft wood rod mounted to the block as shown in Figure 4.

4.4.1 A 0.050-in. (0.13-cm) thick soft leather strip shall be draped over the rod and block to simulate the cushioning effects of hand skin and to protect the blade on cut-through.

4.4.2 The material specimen shall be draped over the leather strip covering the rod and block, and then tacked tightly in place, but not stretched.

4.4.3 The specimen support is designed to be free standing so that several parallel-cut attempts, spaced not less than 1/8 in. (0.3 cm) apart, can be made on each specimen.

4.5 A *thickness gauge*, capable of measuring thickness to the nearest 0.001 in. (or nearest 0.01 mm), as specified in Federal Standard 191, Method 5030.2, shall be provided to determine the thickness of each specimen.

5.0 Test Procedure

5.1 Each material specimen shall be conditioned before testing.

5.1.1 Materials to be tested dry shall be conditioned for a minimum of 24 hrs. at a temperature of 70±5°F (21±3°C) and a relative humidity of 50±5%.

5.1.2 Materials to be tested wet shall be immersed in room temperature water (70±5°F, 21±3°C) for not less than 1 hr. The specimens shall be blotted surface-dry between absorbent paper towels and tested with 5 minutes of removal from the water.

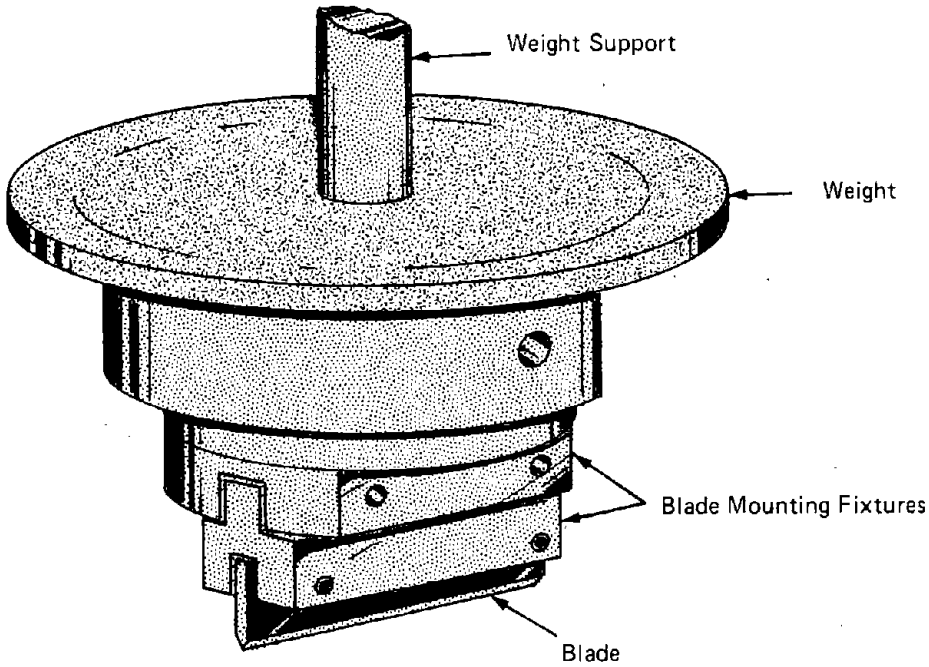

FIGURE 2 TEST BLADE HOLDER

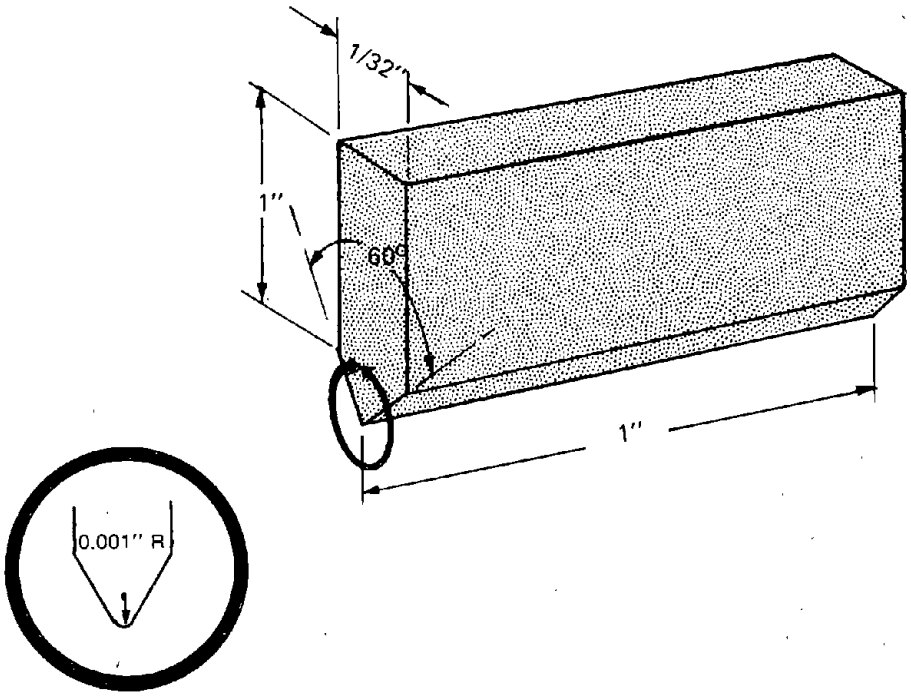

FIGURE 3 TEST BLADE

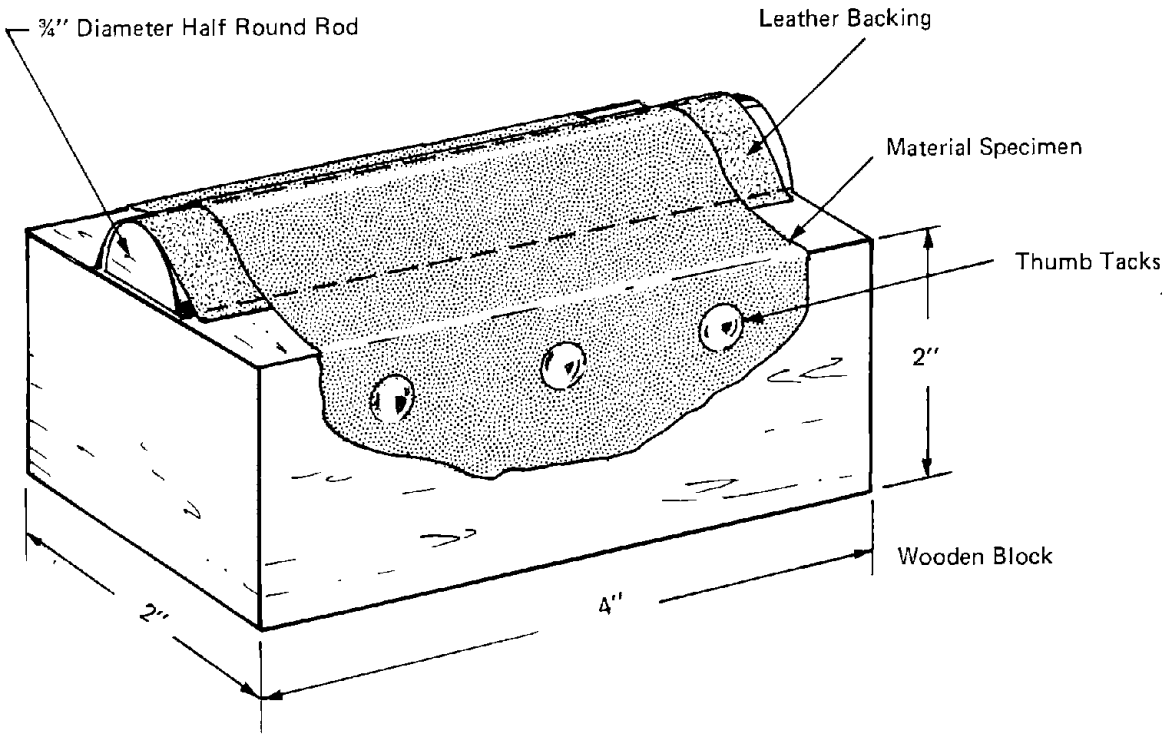

FIGURE 4 MATERIAL SPECIMEN SUPPORT

5.2 The thickness of each conditioned specimen shall be measured to the nearest 0.001 in. (or nearest 0.01 mm).

5.3 The first specimen to be tested shall be mounted on the support assembly as shown in Figure 4. The support assembly shall be positioned on the base of the "L"-frame.

5.4 The pivoted arm and blade holder shall be initially loaded with weights to the maximum 20 lb. A blade shall be inserted in the holder and the pivoted arm shall be lowered to bring the blade edge into contact with the specimen surface.

5.4.1 The initial specimen-edge contact shall be made 1/8 in. (0.3 cm) from the leading end of the blade.

5.5 The specimen support assembly shall be drawn smoothly under the weighted blade at a rate no greater than 20 in./min (50 cm/min) in a direction that is parallel to the blade edge.

5.5.1 The support assembly shall be stopped when the specimen – edge contact reaches 1/8 in. from the trailing end of the blade.

5.6 The pivoted arm shall be lifted to remove the blade edge from the material specimen, and the locking mechanism shall be engaged to secure the pivoted arm.

5.7 The specimen shall be inspected visually to determine whether the surface was cut by the blade edge.

5.7.1 Care must be taken in inspecting the specimen surface for cut. Grooving can occur, but this does not constitute cut.

5.8 If the specimen surface has been cut, the weight shall be reduced by 2 lb and the test procedure repeated.

5.8.1 In repeating the test procedure, the specimen shall be repositioned so that the blade edge is 1/8 in. to the side of the previous cut attempt.

5.9 The weights shall be reduced at 2-lb intervals and the test procedure repeated until the point of no-cut is reached or the minimum weight of 2 lb is reached.

5.9.1 If all available test sites on the specimen have been used, testing shall continue on an identical, fresh specimen.

5.10 The mimimum force causing cut shall be recorded.

5.10.1 If the specimen has not been cut, a force of 20 lb shall be recorded.

111<

5.11 The test procedure shall be repeated, starting with a weight 4 lb greater than that first noted for cut, until 2 cuts have been made on a single specimen.

5.12 Additional specimens shall be tested until the requirements of paragraph 3.0 are met.

6.0 Report of Test Results

6.1 The force required for each surface cut shall be reported to the nearest 2 lb (or nearest 1.0 kg) for each specimen. The average force for each material shall then be calculated and reported separately for the dry condition and the wet condition.

6.2 The thickness of each specimen shall be reported to the nearest 0.001 in. (or nearest 0.01 mm). The average thickness for each material shall then be calculated and reported separately for the dry condition and the wet condition.

7.0 Notes

7.1 In order to insure a consistent baseline for interpreting the cut data, the *sharpness* (i.e., geometry) *of the blade edge* must be closely monitored and controlled to prevent significant changes in cutting characteristics. A practical, easy-to-use technique for achieving this control utilizes a reference material with known cut resistance. For example, the following vinyl tapes manufactured by the 3M Company, or their equivalents, may be used:

Tape Identification	Minimum Weight For Cut
No. 470 White Vinyl Tape	10 lb (4.5 kg)
No. 472 Black Vinyl Tape	12 lb (5.4 kg)

A test blade should be either replaced or resharpened when it no longer cuts a reference tape under the specified weight.

7.2 During the development of a test method appropriate for evaluating the cut resistance of materials, the following *published methods* were reviewed for applicability, either in part or in whole:

ASTM Method D1052-70 — Measurement of Cut Growth of Rubber by Use of the Ross Flexing Machine.

ASTM Method D2212-64 (1970) — Slit Tear Resistance of Leather.

NBS 73-123	Resistance of Human Skin to Puncture and Laceration.
NBSIR 73-262	Some Cutting Experiments on Human Skin and Synthetic Materials.
NBSIR 74-428	An Inspection Procedure for Detecting Hazardous Edges.
Underwriters Laboratory Method	Test Device Based on NBS Test Method for Inspecting Hazardous Edges (NBSIR 74-428).

B. A TEST METHOD FOR RESISTANCE TO DYNAMIC CUT

1.0 Scope

1.1 This test method determines the resistance to dynamic cut by measuring the energy required to cause a free-falling sharp-edged blade to cut the surface of a material specimen.

1.2 This test method defines the test procedure, test apparatus, blade dimensions, and material specimen size, conditioning and position on the apparatus.

2.0 Test Specimens

2.1 Each material specimen to be tested shall be a rectangle at least 2 in. (5.1 cm) by 4.5 in. (11.4 cm). Multiple cut attempts may be made on each specimen (see paragraphs 4.4.3 and 5.7).

2.2 Each specimen may consist of either a single layer or a composite which is representative of actual glove construction, with all layers arranged in proper order. During the test the normal outer surface of each specimen shall be the first to be contacted by the edge of the blade.

2.3 Material specimens may be tested both dry and wet.

3.0 Number of Tests

3.1 Three specimens of each material shall be tested and two cuts made on each. (See paragraphs 5.6 – 5.9.)

3.2 When it is necessary to evaluate both dry and wet specimens, three specimens of each shall be tested.

4.0 Test Apparatus

4.1 The dynamic cut *test apparatus* shall consist of a metal impact rod supported in a vertical guide tube as shown in Figure 5. A sharp-edged blade is mounted on the bottom of the impact rod as shown in Figure 6. The guide tube is supported by a frame which also provides a support for the material specimen support.

4.1.1 A Gardner Light-Duty Impact Tester, or its equivalent, can be used for this test if a sharp-edged blade and impact rod assembly is substituted for the impact rod supplied with the apparatus.

4.1.2 The blade and impact rod shall weigh approximately 0.45 lb (0.20 kg) and the total weight shall be determined to the nearest 0.1 lb (or nearest 50 gm).

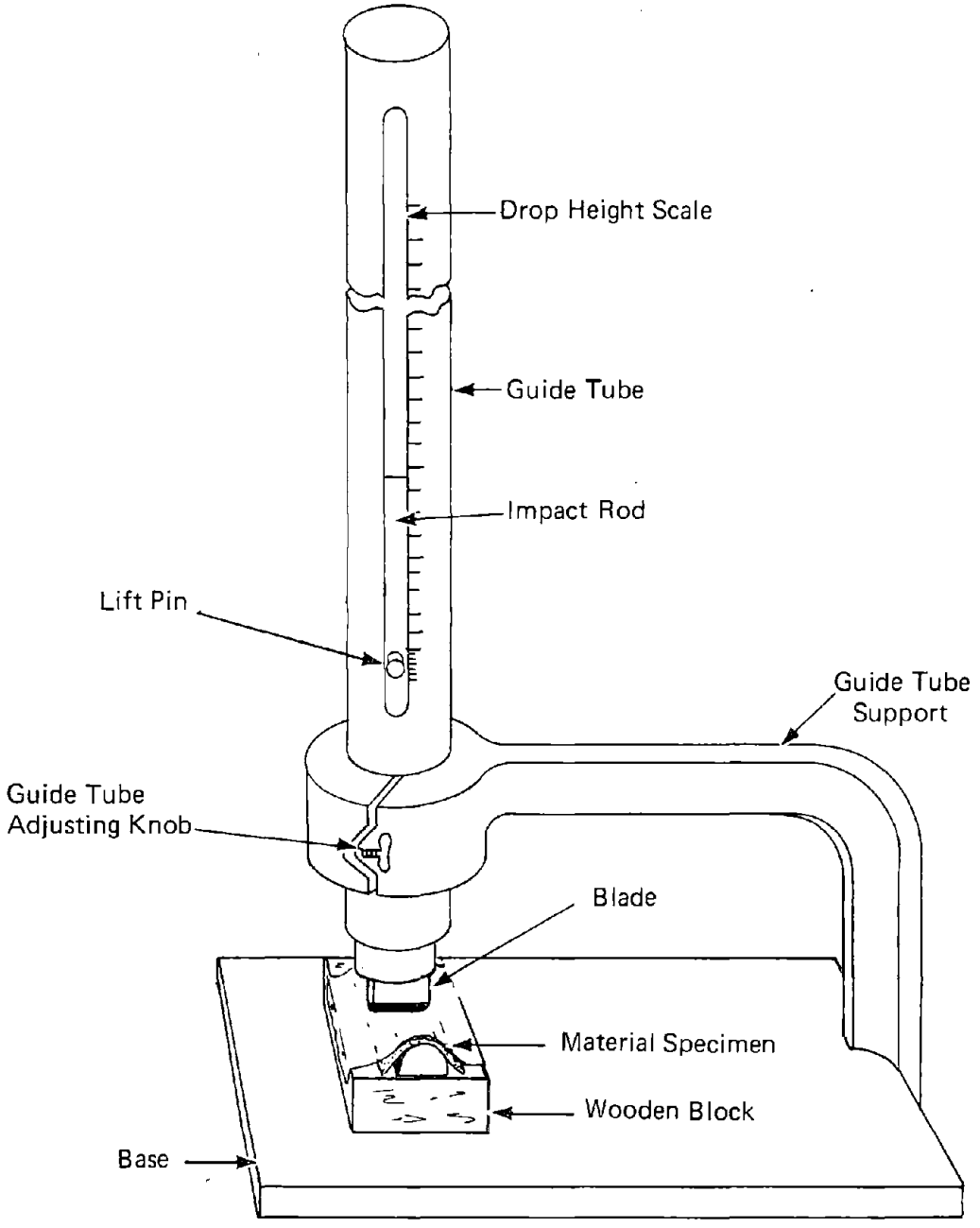

FIGURE 5 DYNAMIC CUT TEST APPARATUS

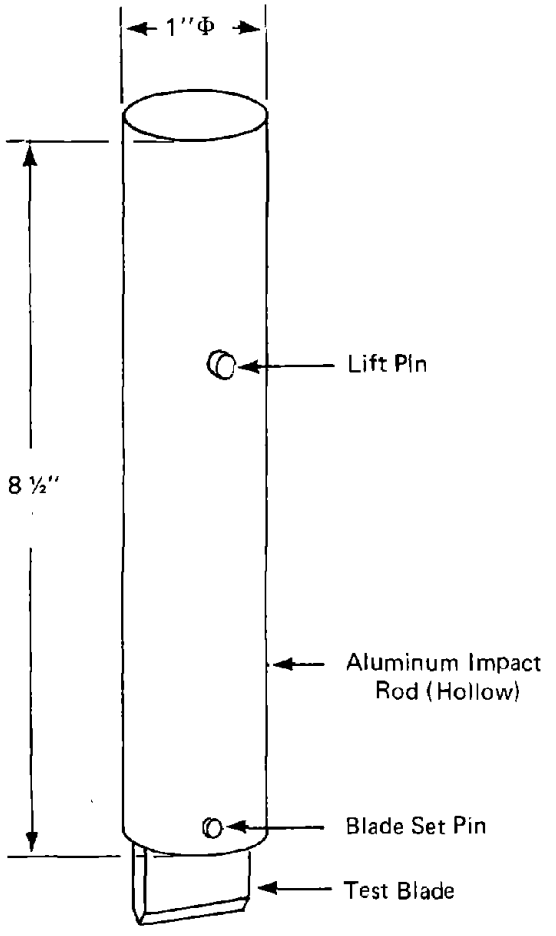

FIGURE 6 IMPACT ROD AND BLADE ASSEMBLY

4.1.3 The full vertical travel of the blade is guided by the lift pin on the impacted rod as it moves in its guide slot.

4.1.4 A height scale, graduated from 0 to 14 in. (0 to 35.5 cm) and marked in 0.5-in. (or 1.0-cm) increments, shall be provided next to the guide slot to indicate free-fall height.

4.1.5 The blade velocity at impact with a material specimen shall vary between 2.3 and 8.5 ft/sec. (0.7 and 2.6 m/sec). These velocities correspond to free-fall heights of 1 in. and 14 in., respectively.

4.2 The blade shall be mounted in a *blade holder* at the bottom of the impact rod. The blade is so mounted that its sharp edge is tangential to the material specimen on impact.

4.3 The *sharp-edged blade* shall be made of tool-hardened steel and shall have the dimensions shown in Figure 3.

4.4 The *specimen support* assemby shall consist of a 2 in. (5.1 cm) x 2 in. (5.1 cm) x 4 in. (10.2 cm) soft wood block and a 3/4-in. (1.9-cm) diameter, half-rounded soft wood rod mounted to the block as shown in Figure 4.

4.4.1 A 0.050-in. (0.13-cm) thick leather strip shall be draped over the rod and block to simulate the cushioning effects of hand skin and to protect the blade on cut-through.

4.4.2 The material specimen shall be draped over the leather strip covering the rod and block, and then be tacked tightly in place, but not stretched.

4.4.3 The specimen support is designed to be free standing so that several parallel cut attempts, spaced 1/4 in. (0.6 cm) apart, can be made on each specimen.

4.5 A *thickness gauge,* capable of measuring thickness to the nearest 0.001 in. (or nearest 0.01 mm), as specified in Federal Standard 191, Method 5030.2, shall be provided to determine the thickness of each specimen.

5.0 Test Procedure

5.1 Each material specimen shall be conditioned before testing.

5.1.1 Materials to be tested dry shall be conditioned for a minimum of 24 hrs at a temperature of 70±5°F (21±3°C) and a relative humidity of 50±5%.

5.1.2 Materials to be tested wet shall be immersed in room temperature water (70±5°F, 21±3°C) for not less than 1 hr. The specimens shall be blotted surface-dry between absorbent paper towels and tested within 5 minutes of removal from the water.

5.2 The thickness of each conditioned specimen shall be measured to the nearest 0.001 in. (or nearest 0.01 mm).

5.3 The first specimen to be tested shall be mounted on the support assembly as shown in Figure 4. The support assembly shall be positioned on the base of the frame.

5.4 A blade shall be inserted in the holder and the impact rod shall be positioned with the blade edge on the surface of the specimen. The guide tube shall be adjusted to bring the zero reading of the scale in line with the lift pin.

5.5 The impact rod and blade shall be raised by the lift pin to a height of 1 in. (2.5 cm) above the zero set-mark and released, allowing the blade to impact the specimen.

5.6 Following impact, the specimen shall be visually inspected to determine whether the surface was cut by the blade edge. The specimen should not be removed from the support for this inspection.

5.6.1 Care must be taken in inspecting the specimen surface for cut. Indentations can occur, but these do not constitute a cut.

5.7 If a cut did not occur, the specimen shall be repositioned so that the blade edge is 1/4 in. to the side of the previous attempt. The test procedure shall be repeated, increasing the height by 0.5-in. increments, until either the specimen surface has been cut or the 14-in. maximum height has been reached.

5.7.1 If all available test sites on the specimen have been used, testing shall continue on an identical, fresh specimen.

5.8 The minimum height that causes a cut shall be recorded.

5.8.1 If the specimen has not been cut, a height of 14-in. shall be recorded.

5.9 The test procedure shall be repeated, starting 1 in. below the height first causing cut and increasing the height by 0.5-in. (1-cm) increments until 2 cuts have been made on a single specimen.

5.10 Additional specimens shall be tested until the requirements of paragraph 3.0 are met.

6.0 Report of Test Results

6.1 The height required for each surface cut shall be reported to the nearest 0.5 in. (or nearest 1 cm) for each specimen. The average height for each material shall then be calculated and reported separately for the dry condition and the wet condition.

6.2 The thickness of each specimen shall be reported to the nearest 0.001 in. (or nearest 0.01 mm). The average thickness for each material shall then be calculated and reported separately for the dry condition and the wet condition.

6.3 The average energy required to cut each material shall be calculated and reported separately for the dry condition and the wet condition by the following formula:

$$C = h \times w$$

where

w = weight of impact rod and blade in lb (kg).
h = average free-fall height in in. (cm).
C = average cut resistance in in.-lb (kg-cm).

7.0 Notes

7.1 See Static Cut Test Method, paragraph 7.2.

C. A TEST METHOD FOR RESISTANCE TO STATIC PUNCTURE

1.0 Scope

1.1 This test method determines the resistance to static puncture by measuring the force required to cause a pointed penetrometer to puncture a material specimen.

1.2 This test method defines the test procedure, test apparatus, penetrometer dimensions, and material specimen size, conditioning and position in the apparatus.

2.0 Test Specimens

2.1 Each material specimen to be tested shall be a rectangle at least 3.5 in. (8.9 cm) on a side. Multiple puncture tests may be made on each specimen.

2.2 Each specimen may consist of either a single layer or a composite which is representative of actual glove construction wth all layers arranged in proper order. In each test, the specimen's normal outer surface shall be the first contacted by the point of the penetrometer.

2.3 Material specimens may be tested in either a dry or a wet condition.

3.0 Number of Tests

3.1 Three specimens shall be tested for each material with three punctures made on each specimen.

3.2 When it is necessary to evaluate both dry and wet specimens, three specimens shall be tested for each condition.

4.0 Test Apparatus

4.1 The static puncture *test apparatus* shall be a testing machine, such as an Instron or its equivalent, which challenges a material specimen with a uniformly moving pointed penetrometer as shown in Figure 7. The machine shall meet the requirements described in paragraphs 4.1.1-4.1.4.

4.1.1 The penetrometer shall be motor-driven at rate of travel of 20 in./min (50 cm/min) under load conditions and shall be uniform at all times.

4.1.2 The force applied to the specimen shall be accurate to ±1% up to and including a force of 50 lb (or 25 kg). The force shall be detected by a compression cell and shall be indicated by a dial, scale or automatic recorder.

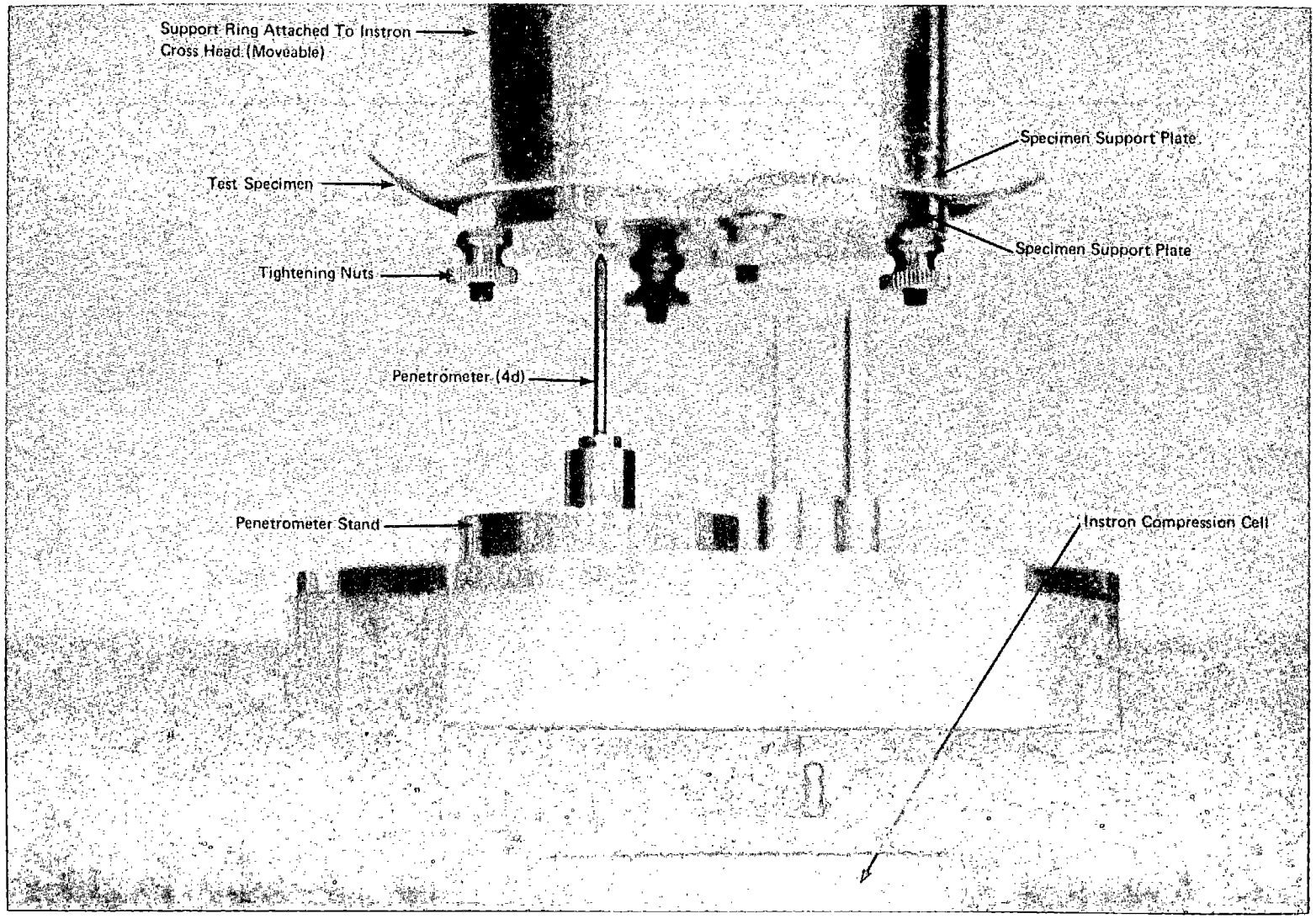

FIGURE 7 STATIC PUNCTURE TEST APPARATUS

4.1.3 The apparatus shall be able to record or indicate the maximum load at puncture of a specimen.

4.1.4 To prevent damage by impact on the underlying support assembly (see paragraph 4.3), the travel of the penetrometer shall be capable of being stopped once the tip has passed beyond the specimen. This can be accomplished by a mechanical or an electrical stop on the test apparatus. For the support assembly described in paragraph 4.3, the stop is set approximately 1 in. (2.5 cm) beyond the specimen surface.

4.2 A *penetrometer* having the size and dimensions shown in Figure 8 shall be mounted on the test apparatus and be attached to the compression cell of the machine as shown in Figure 7.

4.3 The *specimen support* assembly shall consist of two flat metal plates which clamp together so the material specimen is held tightly between them as shown in Figure 9.

4.3.1 Each plate shall have one or more 1/4 in. (0.6-cm) diameter holes. For efficiency in testing, three holes spaced at the points of a 60-degree equilateral triangle having 1-in. (2.5-cm) legs centered within the plate can be used. Each hole is located 3/4 in. (1.9 cm) from the plate edge and 1 in. (2.5 cm) from each of the other holes, as shown in Figure 10.

4.3.2 The specimen support plates shall be connected to a metal support ring which mounts on the movable arm of the test apparatus, as shown in Figure 7.

4.4 A *thickness gauge* capable of measuring thickness to the nearest 0.001 in. (or nearest 0.01 mm), as specified in Federal Standard 191, Method 5030.2, shall be provided to determine the thickness of each specimen.

4.5 A *template* shall be used to locate the holes for specimen mounting in the support assembly, as shown in Figure 11.

4.6 A *leather punch* shall be used to cut the four holes in each specimen as located by the template.

5.0 Test Procedure

5.1 Each material specimen shall be conditioned before testing:

5.1.1 Materials to be tested dry shall be conditioned for a minimum of 24 hrs at a temperature of 70±5°F (21±3°C) and a relative humidity of 50±5%.

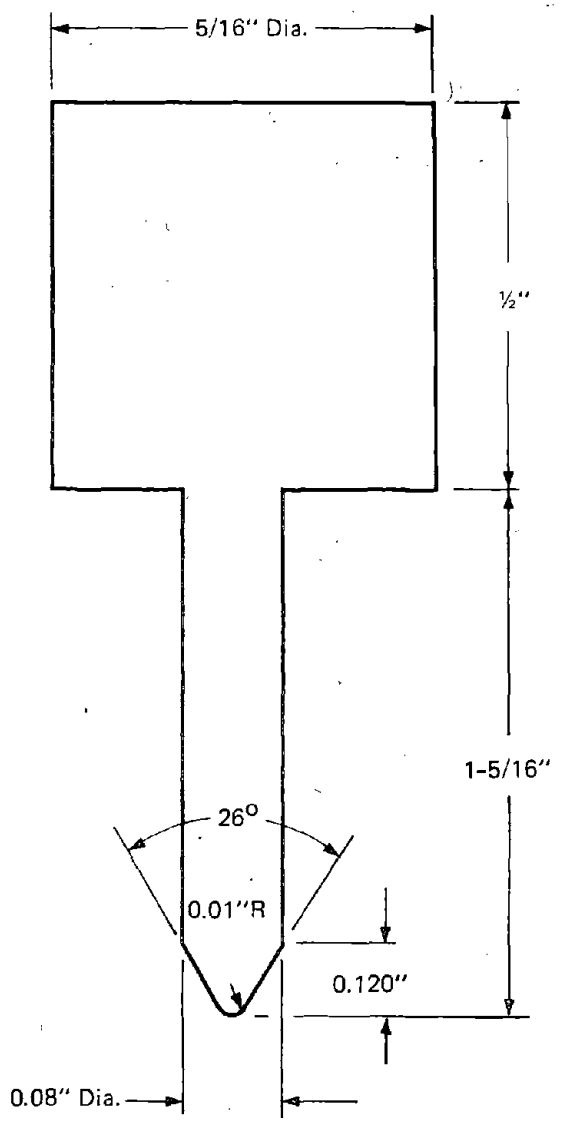

FIGURE 8 CROSS-SECTION OF 4d PENETROMETER

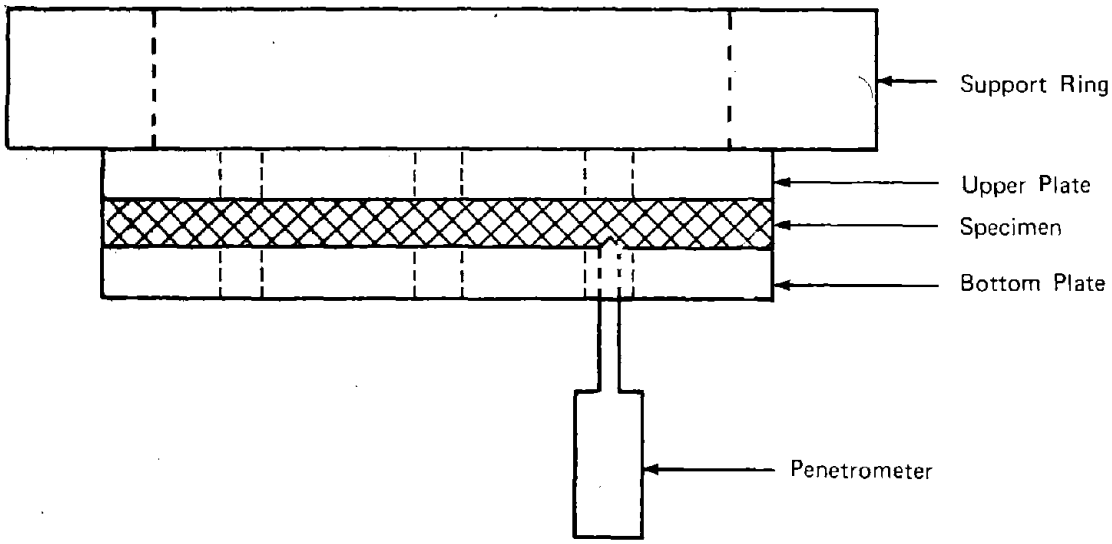

FIGURE 9 SIDE-VIEW OF SPECIMEN SUPPORT ASSEMBLY

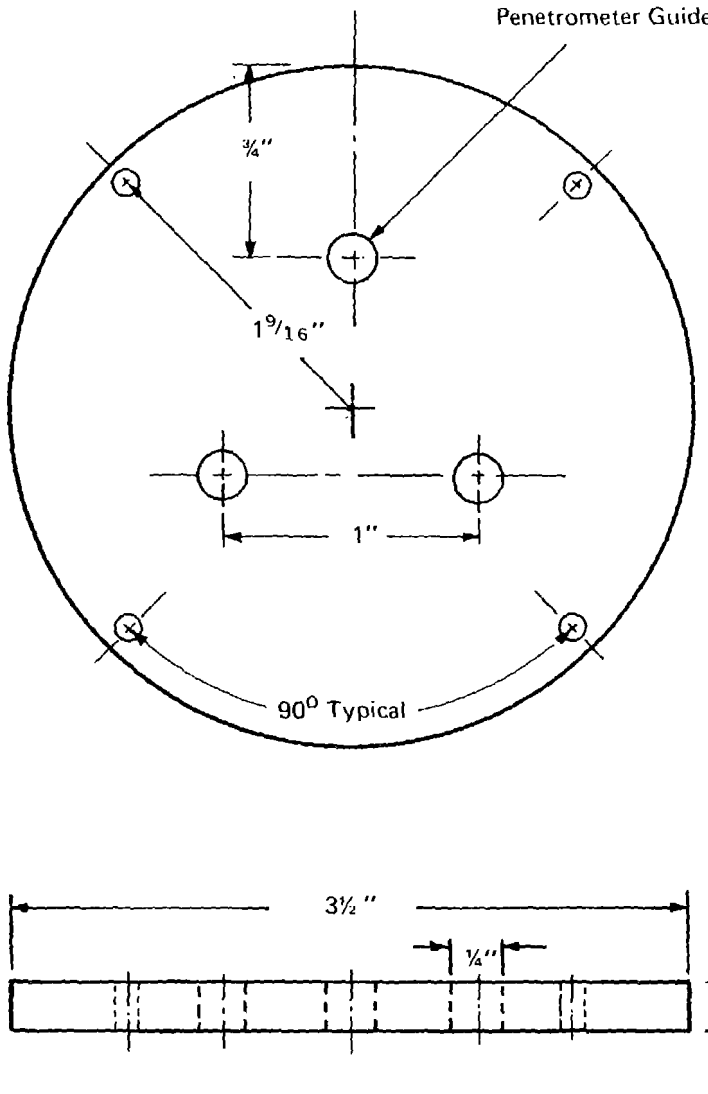

FIGURE 10 SUPPORT PLATE (Two Required)

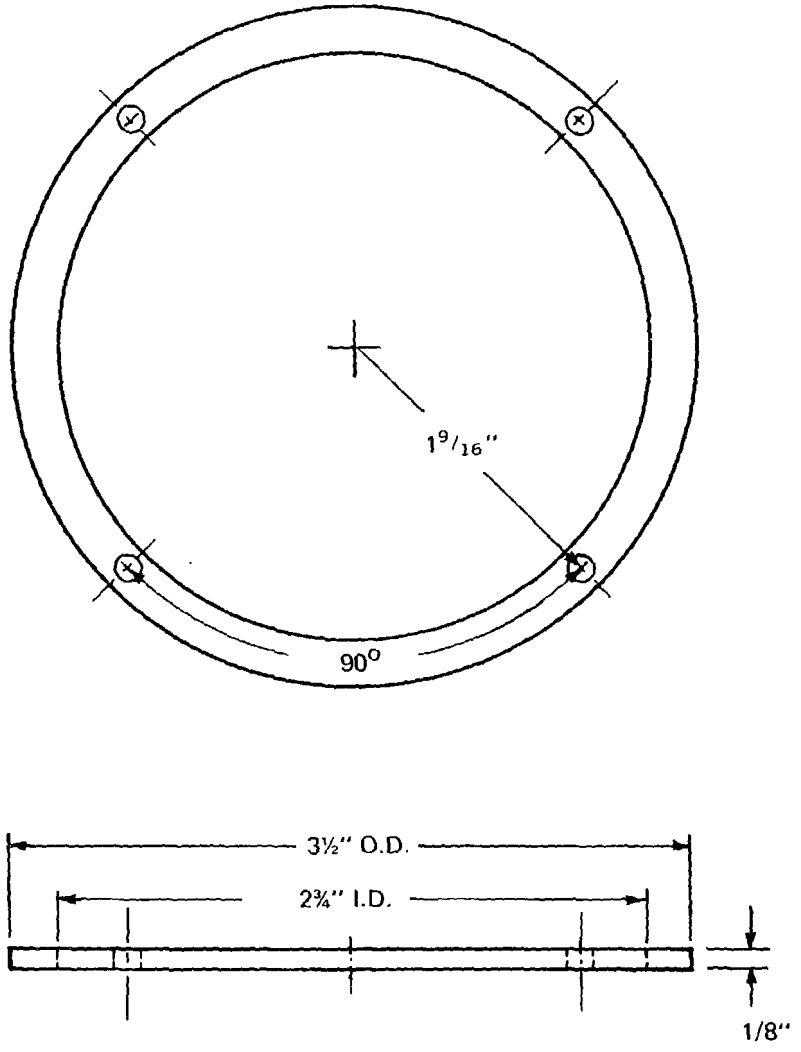

FIGURE 11 TEMPLATE

5.1.2 Materials to be tested wet shall be immersed in room temperature water (70±5°F, 21±3°C) for not less than 1 hr. The specimens shall be blotted surface-dry between absorbent towels and tested within 5 min of removal from the water.

5.2 The thickness of each conditioned specimen shall be measured to the nearest 0.001 in. (or nearest 0.01 mm).

5.3 The first specimen to be tested shall be mounted in the support assembly as shown in Figure 9.

5.3.1 It is important that the two plates be marked and care taken that the holes are aligned prior to testing to avoid damaging the penetrometer and plates.

5.4 The support assembly shall be attached to the movable arm of the test apparatus.

5.5 The penetrometer shall be positioned on the compression cell of the test apparatus as shown in Figure 7.

5.6 The apparatus shall be set in operation, but stopped when the penetrometer has been driven through the material specimen. (See paragraph 4.1.4.)

5.7 The maximum force registered by the indicating device shall be recorded to the nearest 0.1 lb (or nearest 50 gm) for each determination.

5.7.1 If the specimen has not been penetrated, a maximum force of 50 lb (or 25 kg) shall be recorded.

5.8 After the first test has been run, the penetrometer shall be repositioned under each of the other guide holes and the test repeated until three punctures have been made.

5.9 Additional specimens shall be tested until the requirements of paragraph 3.0 are met.

6.0 Report of Test Results

6.1 The force required for each puncture shall be reported to the nearest 0.1 lb (or nearest 50 gm) for each specimen. The average force for each material shall then be calculated and reported separately for the dry condition and the wet condition.

6.2 The thickness of each specimen shall be reported to the nearest 0.001 in. (or nearest 0.01 mm). The average thickness for each material shall then be calculated and reported separately for the dry condition and the wet condition.

6.3 If possible, observations shall be made and reported on the relative puncture resistance of various layers if the material specimen is a composite of two or more layers.

7.0 Notes

7.1 During the development of a test method appropriate for evaluating the puncture resistance of materials, the following *published methods* were reviewed for applicability, either in part or in whole:

ASTM Method D781-68 (1973)	Puncture and Stiffness of Paperboard, Corrugated and Solid Fiberboard.
ASTM Method D1048-70	Rubber Insulating Blankets, Spec. for (Paragraph 17.4, Puncture Test).
ASTM Method D1321-70	Needle Penetration of Petroleum Waxes.
ASTM Method D1709-67 (1972)	Impact Resistance of Polyethylene Film by the Free-Falling Dart Method.
ASTM Method D2207-64 (1970)	Bursting Strength of Leather by the Ball Method.
ASTM Method D2582-67 (1972)	Resistance to Puncture – Propagation of Tear in Thin Plastic Sheeting.
Federal Standard, 311, Method 2051	Bursting Strength, Plunger Method.
NBS 10,673	Method for Evaluating and Testing Sharpness of Points (1972).
NBS 10,839	The Skin Puncture Potential of Points Associated with Certain Toys (1972).
NBS 73-123	Resistance of Human Skin to Puncture and Laceration.

D. A TEST METHOD FOR RESISTANCE TO DYNAMIC PUNCTURE

1.0 Scope

1.1 This test method is designed to determine the resistance to dynamic puncture by measuring the energy required for a free-falling pointed penetrometer to puncture a material specimen.

1.2 This test method defines the test procedure, test apparatus, penetrometer dimensions, and material specimen size, conditioning and position in the apparatus.

2.0 Test Specimens

2.1 Each material specimen to be tested shall be a rectangle at least 3.5 in. (8.9 cm) on a side. Multiple puncture attempts may be made on each specimen (see paragraph 5.8).

2.2 Each specimen may consist of either a single layer or a composite which is representative of actual glove construction with all layers arranged in proper order. In each test, the specimen's normal outer surface shall be the first to be contacted by the point of the penetrometer.

2.3 Material specimens may be tested in either a dry or a wet condition.

3.0 Number of Tests

3.1 Three specimens of each material shall be tested and three punctures made on each.

3.2 When it is necessary to evaluate both dry and wet specimens, three specimens shall be tested for each condition.

4.0 Test Apparatus

4.1 The dynamic puncture *test apparatus* shall consist of a metal impact rod supported in a vertical guide tube as shown in Figure 12. A pointed penetrometer is mounted on the bottom of the impact rod as shown in Figure 13. The guide tube is supported by a frame which also provides a support for the material specimen support.

4.1.1 A Gardner Light-Duty Impact Tester, or its equivalent, can be used for this test if a pointed penetrometer and impact rod assembly is substituted for the impact rod supplied with the apparatus.

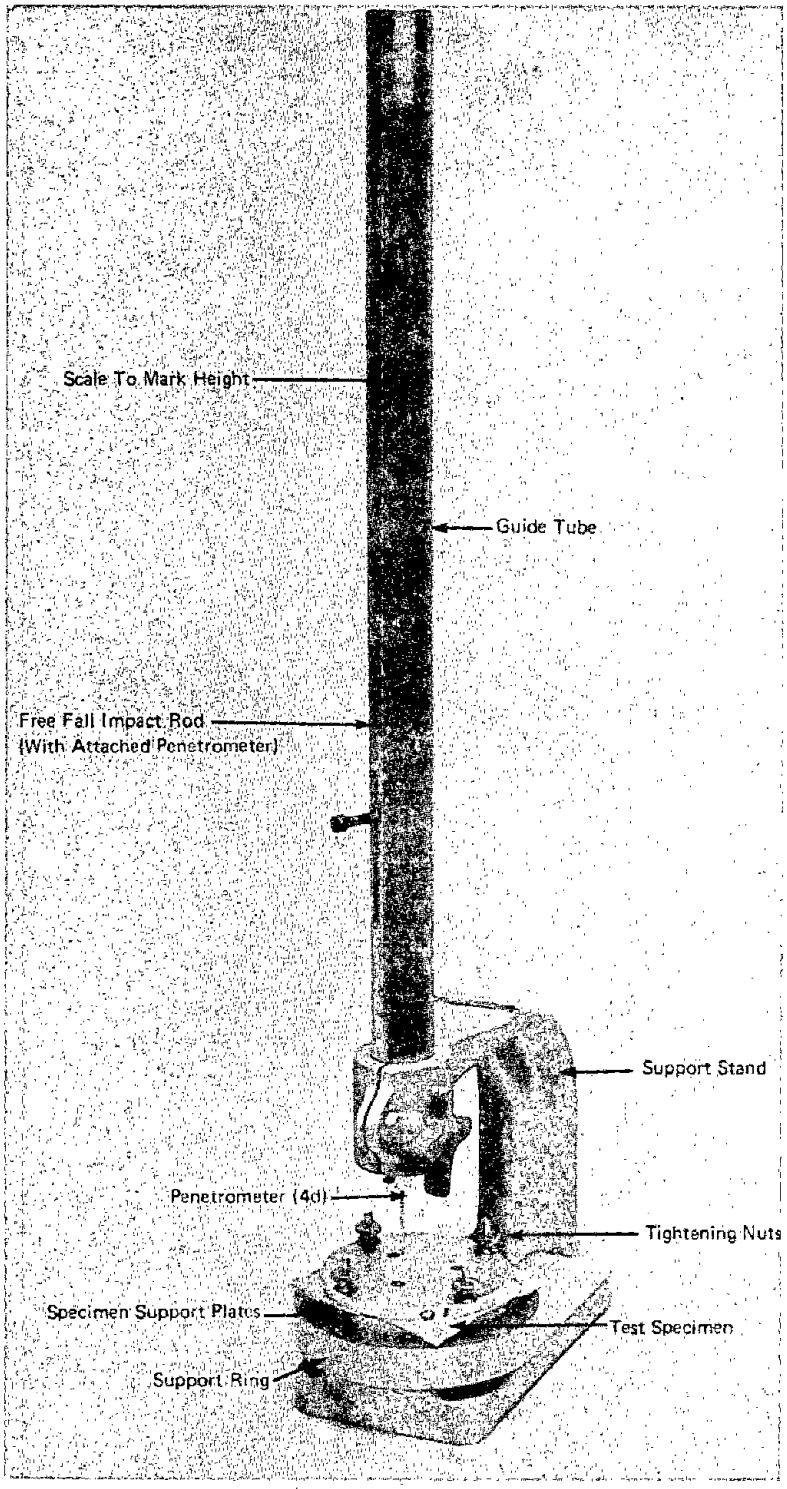

FIGURE 12 DYNAMIC PUNCTURE TEST APPARATUS

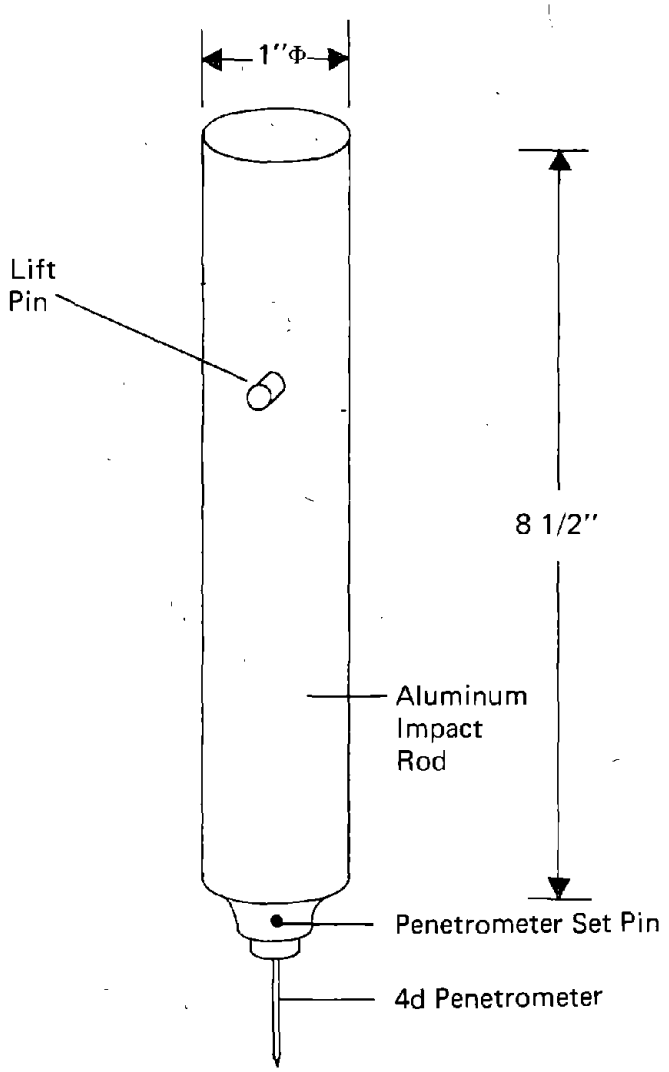

FIGURE 13 IMPACT ROD AND PENETROMETER ASSEMBLY

4.1.2 The penetrometer and impact rod shall weigh approximately 1 lb (0.45 kg) and the total weight shall be determined to the nearest 0.1 lb (or nearest 50 gm).

4.1.3 The full vertical travel of the penetrometer is guided by the lift pin on the impact rod as it moves in its guide slot.

4.1.4 A height scale, graduated from -1 to +14 in. (-2.5 to +35.5 cm) and marked in 0.5-in. (or 1.0-cm) increments, shall be provided next to the guide slot to indicate free-fall height.

4.1.4.1 The -1 to 0 in. segment shall be graduated in 0.1 in. (or 1.0 mm) increments to assist in determining the extent of specimen penetration. (See paragraph 5.7.)

4.1.5 The penetrometer velocity at impact with a material specimen shall vary between 2.3 and 8.5 ft/sec (0.7 and 2.6 m/sec). These velocities correspond to free-fall heights of 1 in. and 14 in., respectively.

4.2 The pointed penetrometer shall have the dimensions shown in Figure 8.

4.3 The *specimen support* assembly shall consist of two flat metal plates which clamp together so the material specimen is held tightly between them, as shown in Figure 9.

4.3.1 Each plate shall have one or more 1/4-in. (0.6-cm) diameter holes. For efficiency in testing, three holes spaced at the points of a 60-degree equilateral triangle having 1-in. (2.5-cm) legs centered within the plate can be used. Each hole is located 3/4 in. (1.9 cm) from the plate edge and 1 in. (2.5 cm) from each of the other holes as shown in Figure 10.

4.3.2 The specimen support plates shall be connected to a metal support ring which rests on the test apparatus frame as shown in Figure 12.

4.4 A *thickness gauge* capable of measuring thickness to the nearest 0.001 in. (or nearest 0.01 mm), as specified in Federal Standard 191, Method 5030.2, shall be used to determine the thickness of each specimen.

4.5 A *template* shall be used to locate the holes for specimen mounting in the support assembly, as shown in Figure 11.

4.6 A *leather punch* shall be used to cut the 4 holes in each specimen as located by the template.

5.0 Test Procedure

5.1 Each material specimen shall be conditioned before testing:

5.1.1 Materials to be tested dry shall be conditioned for a minimum of 24 hrs at a temperature of 70±5°F (21±3°C) and a relative humidity of 50±5%.

5.1.2 Materials to be tested wet shall be immersed in room temperature water (70±5°F, 21±3°C) for not less than 1 hr. The specimens shall be blotted surface-dry between absorbent towels and tested within 5 minutes of removal from the water.

5.2 The thickness of each conditioned specimen shall be measured to the nearest 0.001 in. (or nearest 0.01 mm).

5.3 The first specimen to be tested shall be mounted in the support assembly as shown in Figure 9.

5.3.1 It is important that the two plates be marked and care taken to align the holes prior to testing; otherwise, the penetrometer and plates will be damaged.

5.4 The support assembly shall be positioned on the base of the test apparatus.

5.5 The penetrometer shall be attached and the impact rod shall be positioned with the point of the penetrometer resting on the surface of the specimen. The guide tube shall be adjusted to bring the zero reading of the scale in line with the lift pin.

5.6 The impact rod and penetrometer shall be raised by the lift pin to a height of 1 in. (2.5 cm) above the zero set-mark and released, allowing the penetrometer to impact the specimen.

5.7 Following impact, the extent of penetration shall be determined either by visual inspection of the specimen or by noting the distance the lift pin has dropped below the zero set-mark. If the penetrometer tip length of 0.12 in. (0.3 cm) plus the specimen thickness is exceeded, the specimen has been punctured.

5.8 If complete puncture did not occur, the penetrometer shall be repositioned over a guide hole exposing an untested surface of the specimen. The test procedure shall be repeated at increasing 0.5-in. height increments until either the specimen is punctured or the 14-in. maximum length is reached.

5.8.1 After three tests have been completed, the specimen can be removed from the holder, turned 90°, remounted, and retested three more times. This procedure can be repeated once more for a total of nine tests on each specimen.

5.8.2 If all available test sites on the specimen have been used, testing shall continue on an identical, fresh specimen.

5.9 The minimum height that causes puncture shall be recorded.

5.9.1 If the specimen has not been punctured, a height of 14 in. shall be recorded.

5.10 The test procedure shall be repeated, starting 1 in. below the height first causing puncture and increasing the height by 0.5-in. (1-cm) increments until three punctures have been made on a single specimen.

5.11 Additional specimens shall be tested until the requirements of paragraph 3.0 are met.

6.0 Report of Test Results

6.1 The height required for each puncture shall be reported to the nearest 0.5 in. (or nearest 1 cm) for each specimen. The average height for each material shall then be calculated and reported separately for the dry condition and the wet condition.

6.2 The thickness of each specimen shall be reported to the nearest 0.001 in. (or nearest 0.01 m). The average thickness for each material shall then be calculated and reported separately for the dry condition and the wet condition.

6.3 The average energy required to puncture each material shall be calculated and reported separately for the dry condition and the wet condition by the following formula:

$$P = h \times w$$

where

w = weight of impact rod and penetrometer in lb (kg).
h = average free-fall height in in. (cm).
P = average puncture resistance in in.-lb (kg-cm).

7.0 Notes

7.1 See Static Puncture Test Method, paragraph 7.1.

E. A TEST METHOD FOR RESISTANCE TO HEAT PENETRATION

1.0 Scope

1.1 This test method is designed to determine resistance to heat penetration by monitoring the temperature rise of a skin simulant behind a material specimen which is exposed to a specified thermal energy source.

1.2 This test method defines the test procedures for evaluating resistance to both radiant and conductive thermal energies.

1.3 For each type of energy, this method defines the test apparatus, thermal energy flux, exposure time, recommended skin simulant and temperature detector, and material specimen size, conditioning and position within the apparatus.

2.0 Test Specimens

2.1 Each material specimen to be tested against radiant energy shall be a circle of 3-in. (7.6-cm) diameter.

2.2 Each material specimen to be tested against conductive energy shall be a rectangle at least 3 in. (7.6-cm) on a side and shall be cut to the pattern shown in Figure 16.

2.3 Each specimen may consist of either a single layer or a composite which is representative of actual glove construction with all layers arranged in proper order. In each test, the specimen's normal outer surface shall be facing the thermal energy source.

3.0 Number of Tests

3.1 Three specimens shall be tested for each material at each exposure condition.

3.2 If a proposed glove construction has stitched-through seams, three additional specimens containing these seams shall be tested for each exposure condition.

4.0 Test Apparatus

4.1 The *radiant energy test apparatus* shall be capable of exposing material specimens to steady-state radiant fluxes of both 0.2 cal/cm^2-sec. (2660 Btu/ft^2-hr) and 2.5 cal/cm^2-sec. (33,192 Btu/ft^2-hr).

4.1.1 The radiant energy source shall consist of either a bank of quartz infrared lamps or a muffle furnace, each capable of achieving a maximum flux of 4.0 cal/cm^2-sec. (53,200 Btu/ft^2-hr) at a corresponding temperature of 1000°C (1832°F).*

4.1.2 The test apparatus shall be equipped with a shutter system for isolating the test specimen from the energy source, as shown in Figure 14.

4.2 The *specimen support assembly* for radiant energy exposures shall consist of a mounting fixture which allows a 4-in.^{2} (25.8-cm^2) circular portion of the material specimen to be exposed to the energy source. The material specimen shall be backed by a skin simulant appropriately instrumented to detect temperature changes, as shown in Figure 14.

4.3 The *conductive energy test apparatus* shall consist of a laboratory hot plate or equivalent capable of attaining a steady-state temperature of 500°C (932°F), as shown in Figure 15.**

4.4 The *specimen support assembly* for conductive energy exposures shall consist of a mounting fixture which allows a 4-in^2 (25.8cm^2) circular portion of the material specimen to be exposed to the energy source. The material specimen shall be backed by a skin simulant appropriately instrumented to detect temperature changes, as shown in Figure 15.

4.4.1 The material specimen shall overwrap the face of the mounting fixture, which consists of a 2.26-in. (5.7-cm) diameter block of heat resistant material. The material specimen shall be held in place by means of a resilient rubber "O"-ring, as shown in Figure 17.

4.4.2 A means shall be provided for attaching weights to the mounting fixture so that the total bearing weight shall approximate 16 lb over the 4-in.^{2} area (or 4 psi) as shown in Figure 15.

---

*The AVCO Model 25 Fire Simulation Facility (Avco Systems Division, Lowell, Massachusetts), or its equivalent, is satisfactory for this purpose.

** A CHROMOLOX hot plate, Model H2234-1, or its equivalent, is satisfactory for this purpose.

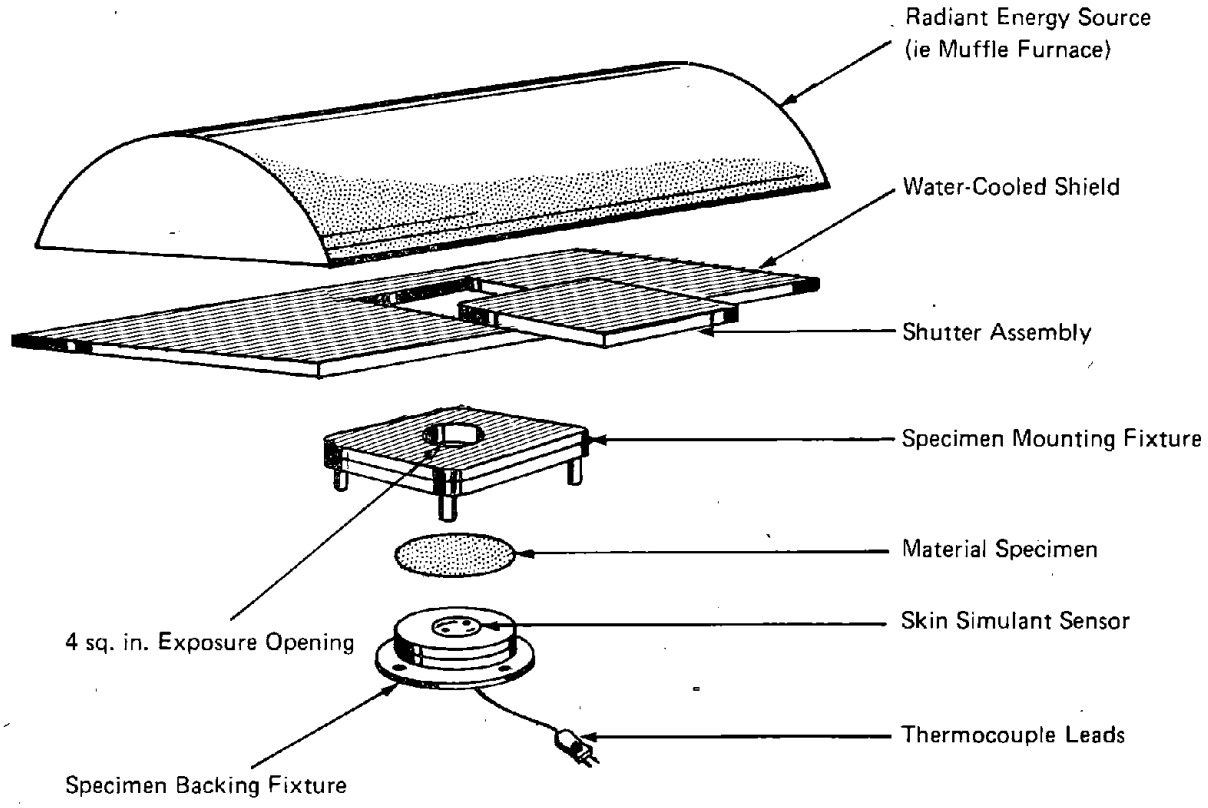

FIGURE 14 RADIANT ENERGY TEST APPARATUS

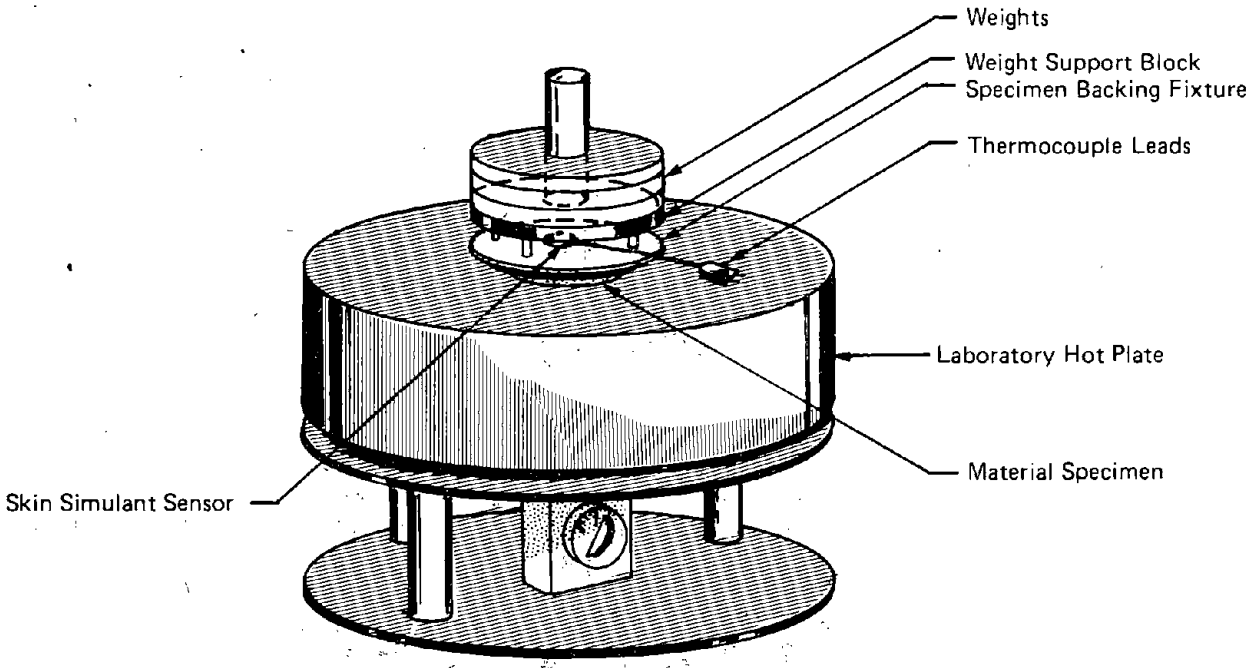

FIGURE 15 CONDUCTIVE ENERGY TEST APPARATUS

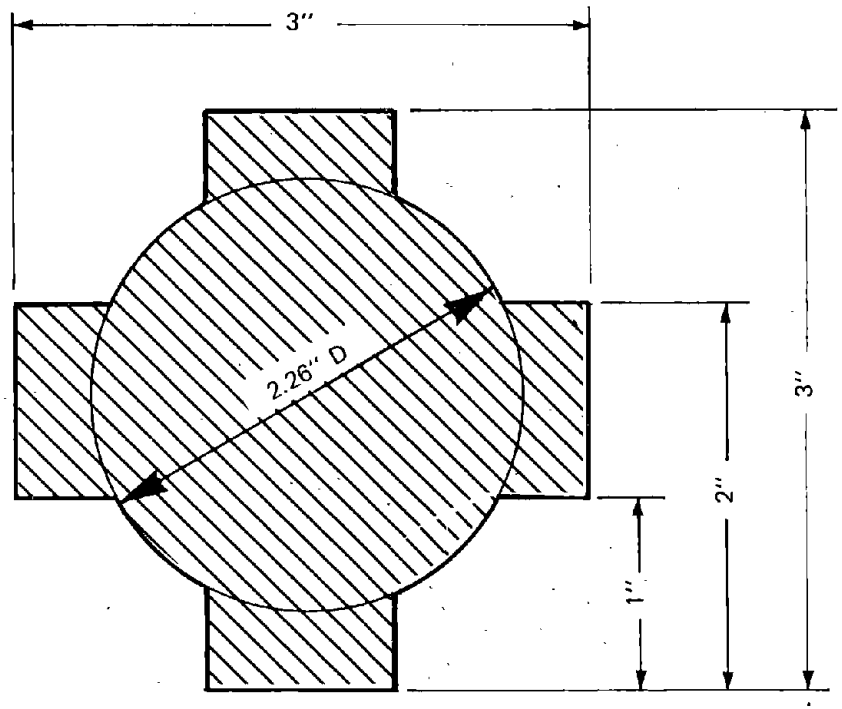

FIGURE 16 MATERIAL FOR CONDUCTIVE ENERGY TEST.

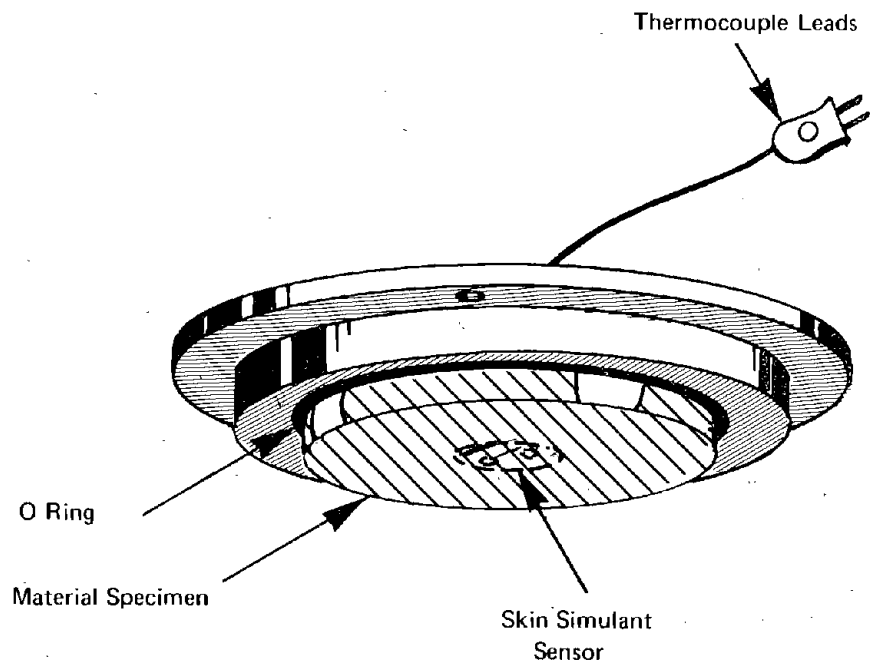

FIGURE 17 SPECIMEN HOLDING FIXTURE

4.5 A *skin simulant* with thermal response characteristics (conductivity, heat capacity, density) simulating those of human skin shall be placed behind all material specimens.*

4.5.1 The skin simulant shall be instrumented with a temperature sensing device (thermocouple or thermistor) to monitor changes in skin simulant temperature during and after exposure to the various thermal energies.

4.6 A HYCAL *radiometer*, or its equivalent, shall be provided to determine radiant energy flux levels.

4.7 A surface *pyrometer* or thermocouple capable of determining temperatures up to 600°C (1112°F) shall be provided to determine the hot plate surface temperature.

4.8 A *thickness gauge*, capable of measuring thickness to the nearest 0.001 in. (or nearest 0.01 mm), as specified in Federal Standard 191, Method 5030.2, shall be provided to determine the thickness of each specimen.

4.9 A continuous *recording device* shall be used to record the output from the skin simulant temperature sensor for later conversion to temperature units versus time.

5.0 Test Procedure

5.1 Each material specimen shall be preconditioned for a minimum of 24 hrs. at a temperature of 70± 5°F (21± 3°C) and a relative humidity of 50± 5%.

5.2 Each conditioned specimen shall be measured to the nearest 0.001 in. (or nearest 0.01 mm) in thickness.

5.3 At the start of each test, the skin simulant temperature shall be brought to the body temperature of 35°C (95°F) to approximate true physiological conditions.

5.4 Radiant Energy Exposure

5.4.1 A material specimen shall be mounted in the support assembly.

---

*The Aerotherm skin simulant sensor (AEROTHERM DIVISION OF ACUREX CORPORATION, MOUNTAIN VIEW, CALIFORNIA) or its equivalent, is satisfactory for this purpose.

5.4.2 The support assembly shall be positioned against the shutter system as shown in Figure 14 and the temperature sensor attached to the recorder.

5.4.3 With the radiant energy flux set at the proper level, the shutter shall be opened.

5.4.3.1 For "hazardous" firefighting conditions, the flux shall be 0.2 cal/cm^2 -sec and the exposure time shall be 10 minutes.

5.4.3.2 For "emergency" firefighting conditions, the flux shall be 2.5 cal/cm^2 -sec and the exposure time shall be 10 minutes.

5.4.4 At the end of the proper exposure time, the shutter shall be closed and the support assembly removed from the shutter system. The temperature sensor shall remain attached to the recorder to allow peak skin simulant temperatures and the rate of cooling to be monitored.

5.5 Additional specimens shall be tested until the requirements of paragraph 3.0 are met for each appropriate radiant energy condition.

5.5.1 A new specimen shall be used for each test.

5.6 Conductive Energy Exposure

5.6.1 A material specimen shall be mounted in the support assembly.

5.6.2 The temperature sensor shall be attached to the recorder.

5.6.3 With the hot plate at 500°C (932°F), the inverted, weighted support assembly shall be placed on the hot plate.

5.6.4 At the end of 5 seconds, the assembly shall be removed from the hot plate. The temperature sensor shall remain attached to the recorder to allow peak skin simulant temperatures and the rate of cooling to be monitored.

5.7 Additional specimens shall be tested until the requirements of paragraph 3.0 are met for the conductive energy condition.

5.7.1 A new specimen shall be used for each test.

6.0 Report of Test Results

6.1 The temperatures recorded at selected times during and following thermal energy exposure shall be reported for each specimen. The average temperatures at the selected times shall then be calculated for each material and each thermal condition. Data shall be reported as temperature plotted against the logarithm of time.

6.2 The thickness of each specimen shall be reported to the nearest 0.001 in. (or nearest 0.01 mm). The average thickness for each material shall then be calculated and reported.

6.3 Observations on the extent of degradation, if any, shall be reported for each material after exposure. This shall include burning, charring, melting and other visible signs of degradation.

7.0 Notes

7.1 References:

(1) Hentscher, R.A., and W.P. Behnke, "Performance Requirements and Testing of Fabrics for Protection from Thermal Hazards," E.I. duPont Corporation, presented at the AIChE Annual Meeting, Philadelphia, Nov., 1973.

(2) "Firemen's Protective Clothing – Turnout Coat," Student Competition on Relevant Engineering, School of Textile Engineering, Georgia Institute of Technology, April, 1974.

(3) Marzetta, L.A., "Engineering and Construction Manual for an Instrument to make Burn Hazard Measurements in Consumer Products," NBS Technical Note 816, February, 1974.

(4) Stoll, A.M., and M.A. Chianta, "Heat Transfer Through Fabrics as Related to Thermal Injury," *Transactions of the New York Academy of Sciences,* Series II, Vol. 33, No. 7, November, 1971.

7.2 During the development of a test method appropriate for evaluating the resistance of materials to thermal energy penetration, the following published methods were reviewed for applicability, either in part or in whole:

NFPA 19A-T	Protective Clothing for Firefighters (Paragraph 1.2.2 Heat Transmission through Fabric).

British Standard No. 3791	Clothing for Protection against Intense Heat for Short Periods; Appendix B – Determination of Thermal Protection Index (Flame) of Clothing Assemblies; Appendix D – Determination of Thermal Protective Index (Radiation) of Clothing Assemblies.

F. A TEST METHOD FOR RESISTANCE TO ELECTRICITY

1.0 Scope

1.1 This test method is designed to determine resistance to electricity by determining the current leakage through a glove exposed to an electrical potential of specified voltage.

1.2 This test method defines the test procedure, test apparatus and glove positioning within the apparatus.

1.3 **Extreme care must be exercised in handling the high voltage equipment used in this test method.**

2.0 Test Gloves

2.1 Each glove shall be tested as a complete glove in new (as-manufactured) condition. This includes liners and outer coverings when they are considered to be an integral part of the glove design.

3.0 Number of Tests

3.1 Three gloves shall be tested for each material and construction combination.

4.0 Test Apparatus

4.1 The electrical resistance *test apparatus* shall consist of a glass or plastic vessel large enough to contain a glove submerged to within 1 in. (2.5-cm) of its wrist.

4.1.1 The vessel shall contain two *electrodes* – the first fitting inside the test glove and the second placed outside the glove – which provide a voltage across the glove materials as shown in Figure 18.

4.1.2 The inner electrode shall be a metallic hand form which is used as a support for the glove. The hand form shall be held in place by an electrically insulated support.

4.1.3 The outer electrode may be a metallic screen lining the vessel walls.

4.2 The electrodes shall be energized by a direct current *power supply* capable of providing a variable voltage up to a maximum of 240 volts. **The power supply shall be actuated by a safety switch which supplies power only on the application of positive pressing by an operator. The switch should automatically disengage when pressure is withdrawn.**

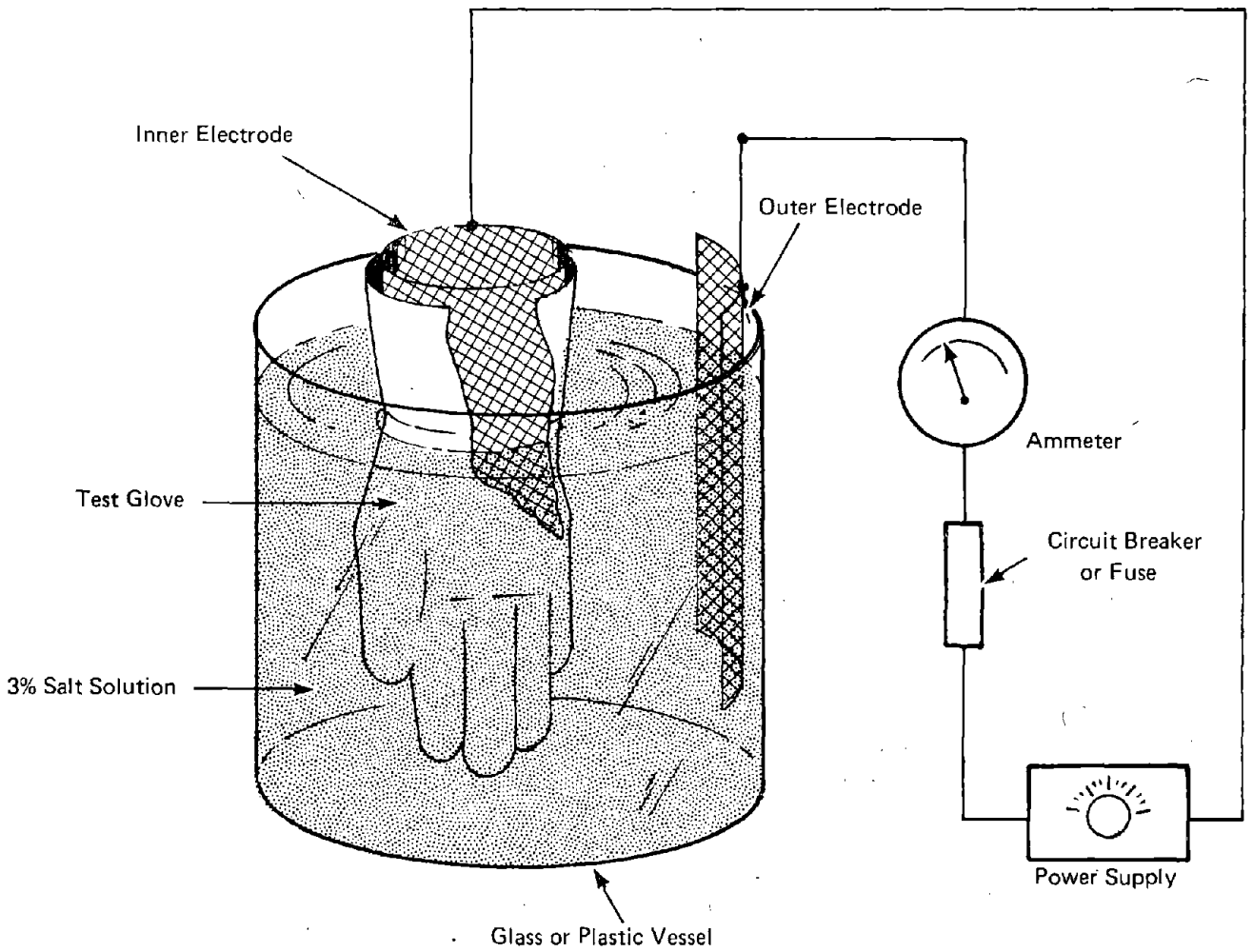

FIGURE 18 ELECTRICAL RESISTANCE TEST APPARATUS

4.3 An *ammeter* capable of measuring currents between 0 and 10 milliamps shall be connected to the circuit as shown in Figure 18.

4.3.1 A current limiting circuit breaker or fuse must be provided to limit the current leakage across the glove to 5 milliamps. This also serves to protect the operator of the apparatus from possible injury.

4.4 A 3% (by weight) sodium chloride solution – filling both the vessel and the glove – shall be used as a conductive medium.

5.0 Test Procedure

5.1 The first glove to be tested shall be mounted on the support electrode.

5.2 The test vessel shall be filled with the salt solution. The glove shall then be lowered into the vessel to within 1 in. (2.5-cm) of its wrist.

5.3 The glove shall then be carefully filled with salt solution until the levels inside and outside the glove are the same. It is very important that the portion of the glove above the liquid remain dry.

5.3.1 The glove shall be allowed to remain in the solution for 2 min. before it is tested.

5.4 The leads from the power supply shall be connected to the two electrodes. **The circuit breaker or fuse must be functional.** The power supply shall be turned on and the voltage slowly increased to 220 volts.

5.5 The voltage shall be maintained at this level for 10 seconds. The maximum current leaking across the glove materials shall be recorded.

5.5.1 If the current exceeds 5 milliamps, the circuit breaker or fuse will automatically activate and break the circuit. A maximum current of 5 milliamps shall then be recorded.

5.6 **The power supply shall be turned off.**

5.7 The lead from the power supply shall be disconnected from the glove electrode. The glove shall be carefully removed.

5.8 Additional gloves shall be tested until the requirements of paragraph 3.0 are met.

6.0 Report of Test Results

6.1 The maximum leakage current for each glove shall be reported. The average current for each material and construction combination shall be calculated and reported.

7.0 Notes

7.1 During the development of a test method appropriate for evaluating the electrical resistance of gloves, the following published method was reviewed for applicability, either in part or in whole:

ASTM Method D120-70 Standard Specification for Rubber Insulating Gloves

G. A TEST METHOD FOR DEXTERITY

1.0 Scope

1.1 This test method determines the dexterity of gloves by establishing the ability of a gloved-hand to pick up a specified object.

1.2 This test method defines the test procedure, test apparatus and glove specimen conditioning.

2.0 Test Gloves

2.1 Each glove shall be tested as a complete glove in new (as-distributed) condition. This includes liners and outer coverings when they are considered to be an integral part of the glove design.

2.2 Gloves shall not receive special softening treatments (such as tapping with a mallet or squeezing between rollers) prior to testing.

2.3 Gloves shall be tested in both the dry condition and the wet condition.

3.0 Number of Tests

3.1 Three gloves in the dry condition shall be tested for each material and construction combination.

3.2 Three gloves in the wet condition shall be tested for each material and construction combination.

4.0 Test Apparatus

4.1 The dexterity *test apparatus* shall consist of smooth, stainless steel pins:

4.1.1 "Fine-Grip" test pins shall consist of a pin, 5.0 mm (0.20 in.) in diameter and 40.0 mm (1.6 in.) in length.*

4.1.2 "Coarse-Grip" test pins shall consist of a pin, 8.0 mm (0.30 in.) in diameter and 50.0 mm (2.0 in.) in length.*

5.0 Test Procedure

5.1 Gloves shall be conditioned before testing.

---

*"Fine-grip" and "coarse-grip" are defined in Volume II, Part I of this report.

5.1.1 Gloves to be tested dry shall be conditioned for a minimum of 24 hrs at a temperature of 70±5°F (21± 3°C) and a relative humidity of 50±5%.

5.1.2 The finger portions of gloves to be tested wet shall be immersed in room temperature water (70± 5°F, 21± 3°C) for not less than 1 hr. The gloves shall be tested within 5 minutes of removal from the water.

5.2 The first glove to be tested shall be evaluated in the dry condition as follows:

5.2.1 A trained operator, wearing the test glove and sequentially using each of the four possible combinations of thumb and finger, shall attempt to pick up the "fine-grip" pin by its circumference from a flat surface. To be successful, this attempt must be completed within 30 seconds.

5.2.1.1 This presumes that the trained operator is able to easily carry out these manipulations with an ungloved hand.

5.2.2 If appropriate, the operator shall carry out the same procedure using the "coarse-grip" pin.

5.3 The test glove shall then be evaluated in the wet condition as follows:

5.3.1 The operator shall repeat the test procedure using the "fine-grip" pin. However, the test shall be conducted with the finger portion of the glove held under a stream of slowly running water.

5.3.2 If appropriate, the operator shall carry out the same procedure using the "coarse-grip" pin.

5.4 Additional gloves shall be tested until the requirements of paragraph 3.0 are met.

6.0 Report of Test Results

6.1 A report shall be made of whether each glove material and construction combination is suitable for dry and/or wet "fine-grip" or "coarse-grip" usage.

6.1.1 To be suitable, all three gloves tested for each usage condition must meet the 30-second limitation specified in paragraph 5.2.1.

6.2 Observations on the factors causing failure, if evident, shall be reported for each material and construction combination not meeting the 30-second limitation. This shall include such factors as bulky fingers, excess materials and slippery materials.

7.0 Notes

7.1 During the development of a test method appropriate for evaluating the dexterity of gloves, the following published method was reviewed for applicability, either in part or in whole.

British Standard No. 3791 — Clothing for Protection against Intense Heat for Short Periods, Appendix F – Test for Tactility of Gloves.

H. A TEST METHOD FOR RESISTANCE TO WATER PENETRATION

1.0 Scope

1.1 This test method determines resistance to water penetration by subjecting a material specimen to water under increasing pressure and measuring the pressure at which penetration occurs.

1.2 This test method defines the test procedure, test apparatus, and material specimen size, conditioning and position within the apparatus.

2.0 Test Specimen

2.1 Each material specimen to be tested shall be a rectangle at least 3.5 in. (8.9 cm) on a side.

2.2 Each specimen may consist of either a single layer or a composite which is representative of actual glove construction with all layers arranged in proper order. In each test, the specimen's normal outer surface shall be presented first to the water.

3.0 Number of Tests

3.1 Three specimens shall be tested for each material and construction combination.

3.2 If a proposed glove design specifies a different material for the palm and the back, three specimens from each location shall be tested.

3.3 If a proposed glove construction has stitched-through seams, three additional specimens containing these seams shall be tested.

4.0 Test Apparatus

4.1 The water penetration *test apparatus* shall consist of a pressure vessel for supporting and exposing a material specimen to water under increasing pressure, as shown in Figure 19.

4.1.1 The pressure vessel shall consist of a machined trough and upper clamping ring. The specimen shall be supported between two rubber gaskets under the clamping ring to give a water tight seal when the apparatus is assembled.

4.1.2 The machined trough shall be fitted with an inlet valve and an outlet valve.

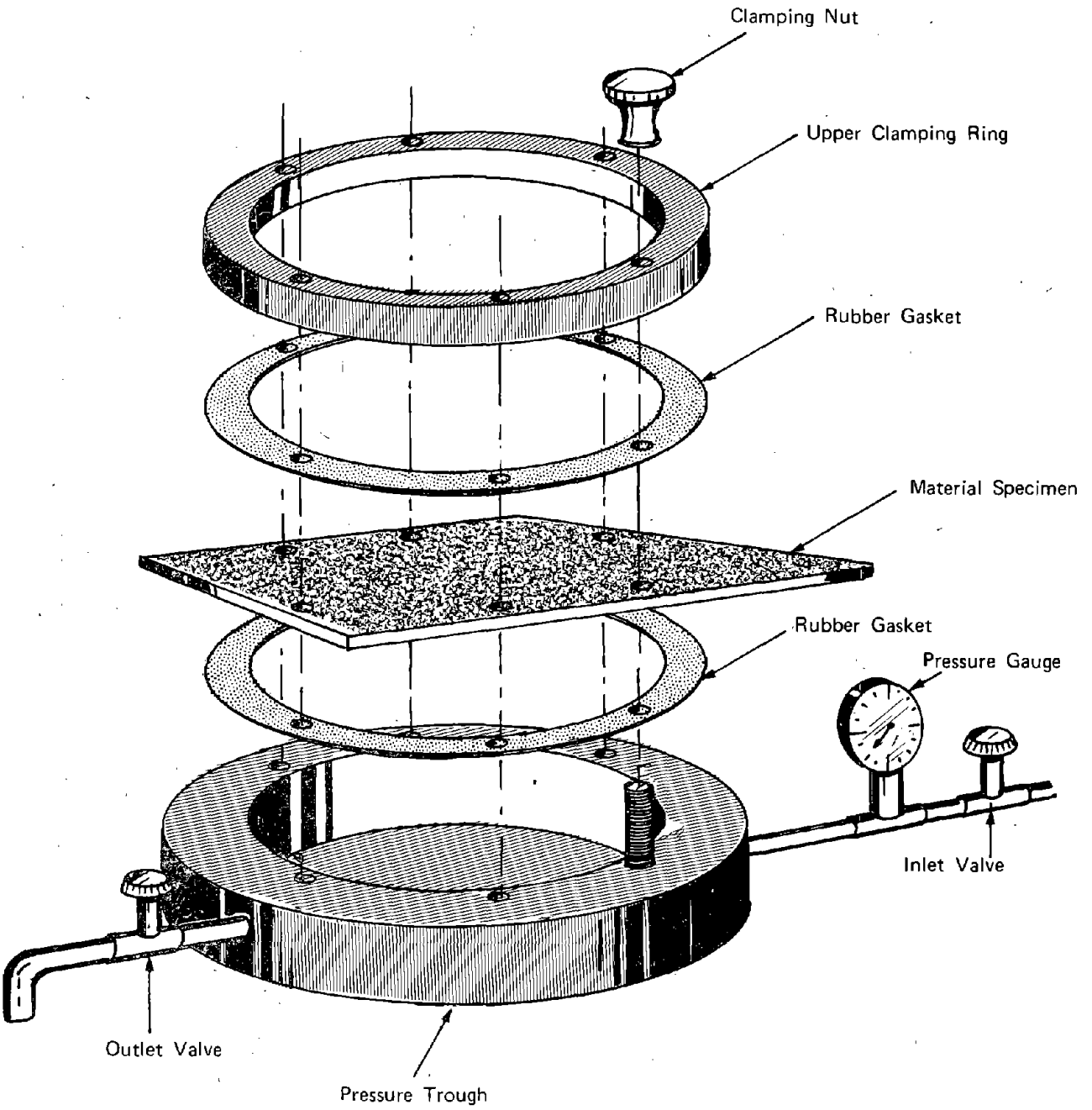

FIGURE 19 WATER PENETRATION APPARATUS

4.2 A water *pressure gauge,* capable of measuring from 0-15 psi (78 cm Hg) gauge, shall be attached to the inlet valve and shall be used to determine the water pressure.

4.3 A *thickness gauge,* capable of measuring thickness to the nearest 0.001 in. (or nearest 0.01 mm), as specified in Federal Standard 191, Method 5030.2, shall be provided to determine the thickness of each specimen.

4.4 A *template* shall be used to locate the holes for specimen mounting in the apparatus, as shown in Figure 20.

4.5 A *leather punch* shall be used to cut the 6 holes in each specimen as located by the template.

5.0 Test Procedure

5.1 Each material specimen shall be pre-conditioned for a minimum of 24 hrs at a temperature of 70±5°F (21±3°C) and a relative humidity of 50±5%.

5.2 The thickness of each conditioned specimen shall be measured to the nearest 0.001 in. (or nearest 0.01 mm).

5.3 The first specimen to be tested shall be mounted in the test apparatus, as shown in Figure 19.

5.4 The apparatus shall be tilted with the outlet elevated. Room temperature water shall be slowly added from a normal 30-50 psi water supply to completely fill the vessel. Excess air will be expelled through the elevated outlet. When the apparatus is full, the outlet valve shall be closed.

5.5 With the apparatus in its normal horizontal position, the water pressure shall be slowly increased to 8 psi (40 cm Hg) in 1 psi (5 cm Hg) increments. Each pressure level shall be maintained for 30 seconds or until visible water penetration occurs.

5.5.1 Water penetration shall be defined as the presence of water droplets and/or damp patches.

5.6 The pressure at which penetration occurred shall be recorded.

5.6.1 If the specimen is not penetrated, a maximum pressure of 8^+ psig shall be recorded.

5.7 Additional specimens shall be tested until the requirements of paragraph 3.0 are met.

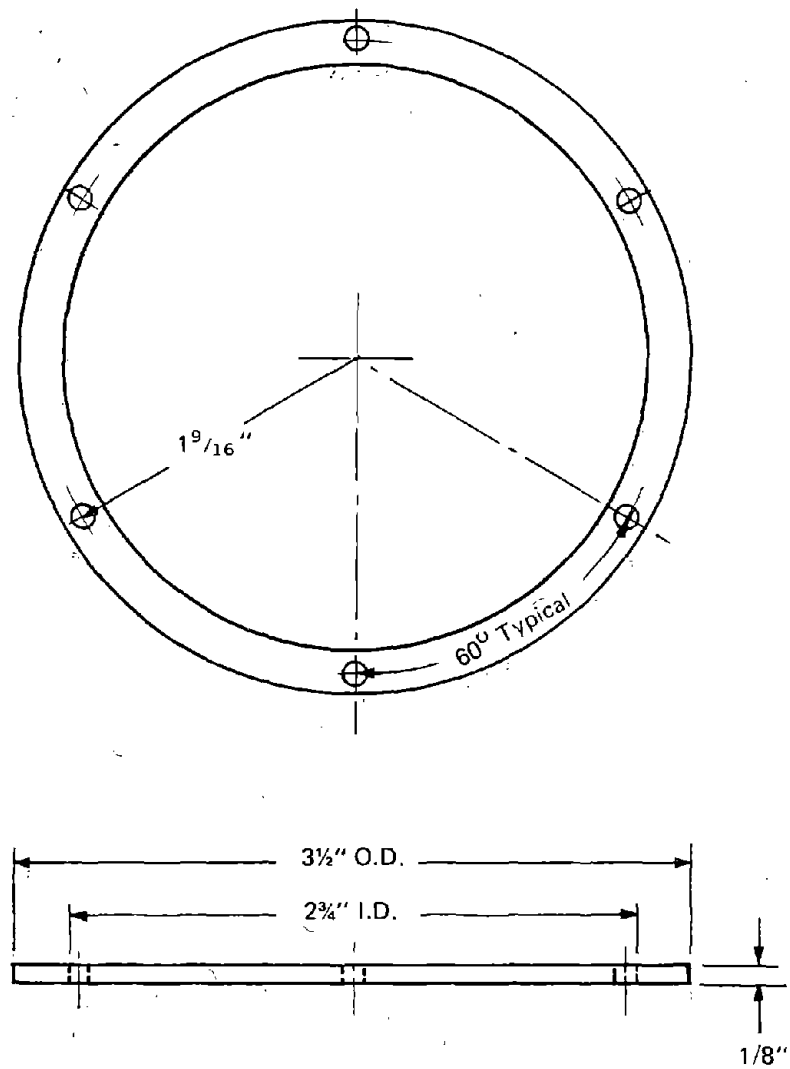

FIGURE 20 TEMPLATE

6.0 Report of Test Results

6.1 The pressure required for penetration of each specimen shall be reported. The average pressure for each material shall be calculated and reported.

6.2 The thickness of each specimen shall be reported to the nearest 0.001 in. (or nearest 0.01 mm). The average thickness for each material shall then be calculated and reported.

7.0 Notes

7.1 During the development of a test method appropriate for evaluating the resistance of materials to water penetration, the following published methods were reviewed for applicability, either in part or in whole.

British Standard NO. 4724 (1971)	Method of Test for Resistance of Air-Impermeable Clothing Materials to Penetration by Harmful Liquids.
Federal Standard 191, Method 4500	Water Absorption – Tumble Jar Method
Federal Standard 191, Method 5500	Water Resistance of Cloth, Dynamic Absorption Method
Federal Standard 191, Method 5502	Water Resistance of Cloth, Immersion Absorption Method
Federal Standard 191, Method 5504	Water Resistance of Coated Cloth, Spray Absorption Method
Federal Standard 191, Method 5512	Water Resistance of Coated Cloth, High Range, Hydrostatic Pressure Method
Federal Standard 191, Method 5514	Water Resistance of Coated Cloth, Low Range, Hydrostatic Pressure Method
Federal Standard 191, Method 5516	Water Resistance of Coated Cloth, Water Permeability, Hydrostatic Pressure Method
Federal Standard 191, Method 5520	Water Resistance of Coated Cloth, Drop Penetration, Hydrostatic Pressure Method
Federal Standard 191, Method 5522	Water Resistance of Cloth, Water Impact Penetration Method

Federal Standard 191, Method 5524	Water Resistance of Cloth, Rain Penetration Method
Federal Standard 191, Method 5528	Water Resistance of Coated Cloth, Spray Method
ASTM Method D543-67	Resistance of Plastics to Chemical Reagents
Textile Chemists & Colorists, Method 130	Soil Release, Oily Stain Release Method

I. A TEST METHOD FOR RESISTANCE TO FLAME

1.0 Scope

1.1 This test method determines resistance to flame by exposing a material specimen of a specified configuration to an open flame.

1.2 This test method defines the test procedure, test apparatus, flame characteristics and material specimen size, conditioning and position on the apparatus.

2.0 Test Specimens

2.1 Each material specimen to be tested shall be a rectangle at least 2 in. (5.1 cm) wide by 4.0 in. (10.2 cm) long.

2.2 Each specimen may consist of either a single layer or a composite which is representative of actual glove construction with all layers arranged in proper order. In each test the specimen's normal outer surface shall be exposed to the flame.

3.0 Number of Tests

3.1 Three specimens shall be tested for each material.

3.2 If a proposed glove construction has stitched-through seams, three additional specimens containing these seams shall be tested. The seam shall be in the direction of the 4.0 in. dimension.

4.0 Test Apparatus

4.1 The flame resistance *test apparatus* shall consist of a cabinet fabricated in accordance with the requirements of Federal Standard 191, Method 5903.2, as shown in Figure 5903A from that standard (Figure 21).

4.2 The cabinet shall enclose a *Bunsen burner* equipped with a 3/8-in. (1.0-cm) inside diameter barrel, and a variable orifice to allow flame-height adjustment.

4.2.1 The burner can be assembled by combining a 3/8-in. inside diameter barrel* from a fixed orifice burner with a base from a variable orifice burner.

4.3 A pilot flame shall be used to ignite the burner flame.

---

*The length should be 3±1/4 in. (7.6±0.6-cm).

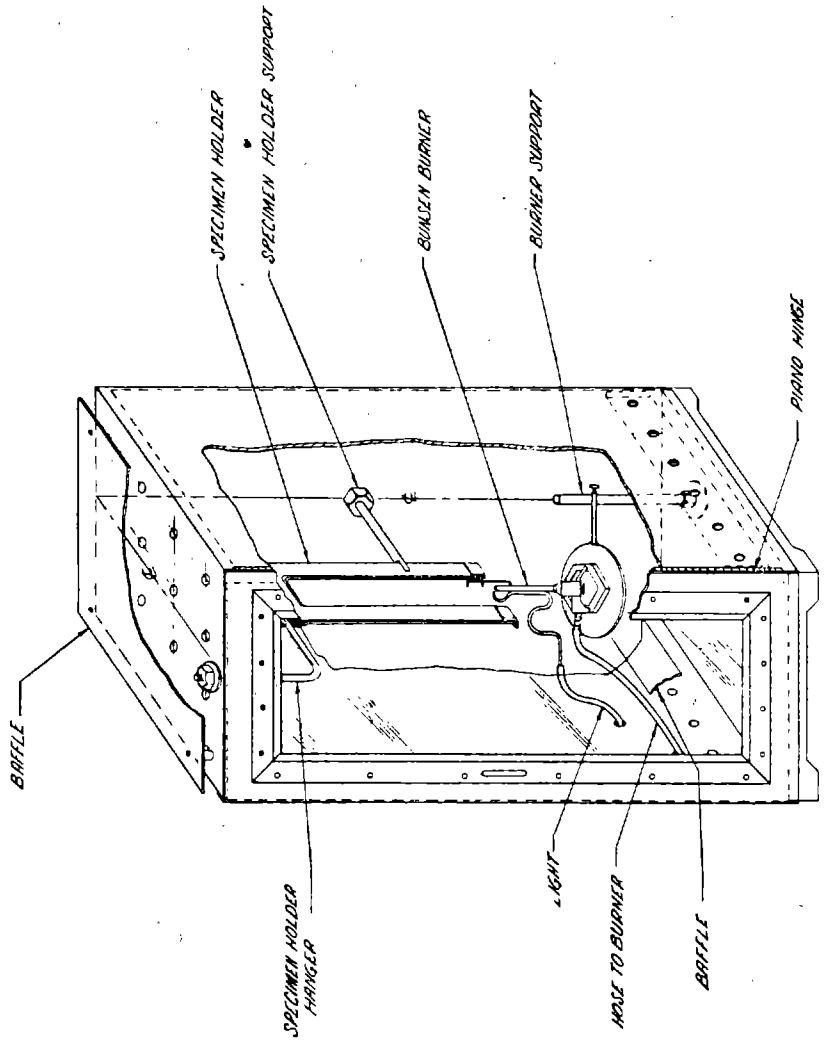

ILLUSTRATION

FIGURE 5903A - Vertical flame resistance textile apparatus.

FIGURE 21

4.3.1 A tube to position the pilot flame adjacent to the burner edge shall be provided as shown in Figure 22. The tube shall have a diameter of approximately 1/16 in. (0.2 cm) and shall be spaced 1/8 in. (0.3 cm) from the burner edge.

4.3.2 The pilot flame shall be 1/8 in. in height.

4.4 The fuel gas connection and associated plumbing shall be as specified in Method 5903.2, except that a solenoid-type on/off valve may be used in place of a stopcock on/off valve for the burner gas supply.

4.4.1 The stopcock valve or solenoid valve, whichever is used, shall be capable of being fully open or fully closed in 0.5 sec.

4.5 A free-standing *flame height indicator* shall be used to assist in adjusting the burner flame height. The indicator shall mark a flame height of 1 1/2 in. (3.8 cm) above the top of the burner, as shown in Figure 22.

4.6 The *specimen support assembly* shall consist of a frame and steel rod of 1/16-in. (0.2-cm) diameter to support the specimen in an "L"-shaped position as shown in Figure 23.

4.6.1 The horizontal portion of the specimen shall be no less than 1 in. (2.5 cm) and the vertical portion no less than 3 in. (7.6 cm).

4.6.2 The specimen shall be held at each end by spring clips under light tension.

4.7 The burner shall be fixed so that the center of the barrel is 3/4 in. (1.9 cm) below the center of the specimen.

4.8 Ordinary *laboratory gas* usually used for Bunsen burners is adequate fuel for this test procedure.

4.9 A *stopwatch* or other device shall be used to measure the testing time to the nearest 0.2 sec.

4.10 A *ruled-scale* graduated in 1/8-in. (or 0.1-cm) increments shall be provided to measure char.

4.11 A *balance* graduated in 0.1 oz (or 0.1 gm) increments shall be used to determine the weight of each specimen before and after test.

5.0 Test Procedure

5.1 Each material specimen shall be preconditioned for a minimum of 24 hrs at a temperature of 70±5°F (21±3°C) and a relative humidity of 50±5%.

Reproduced from best available copy.

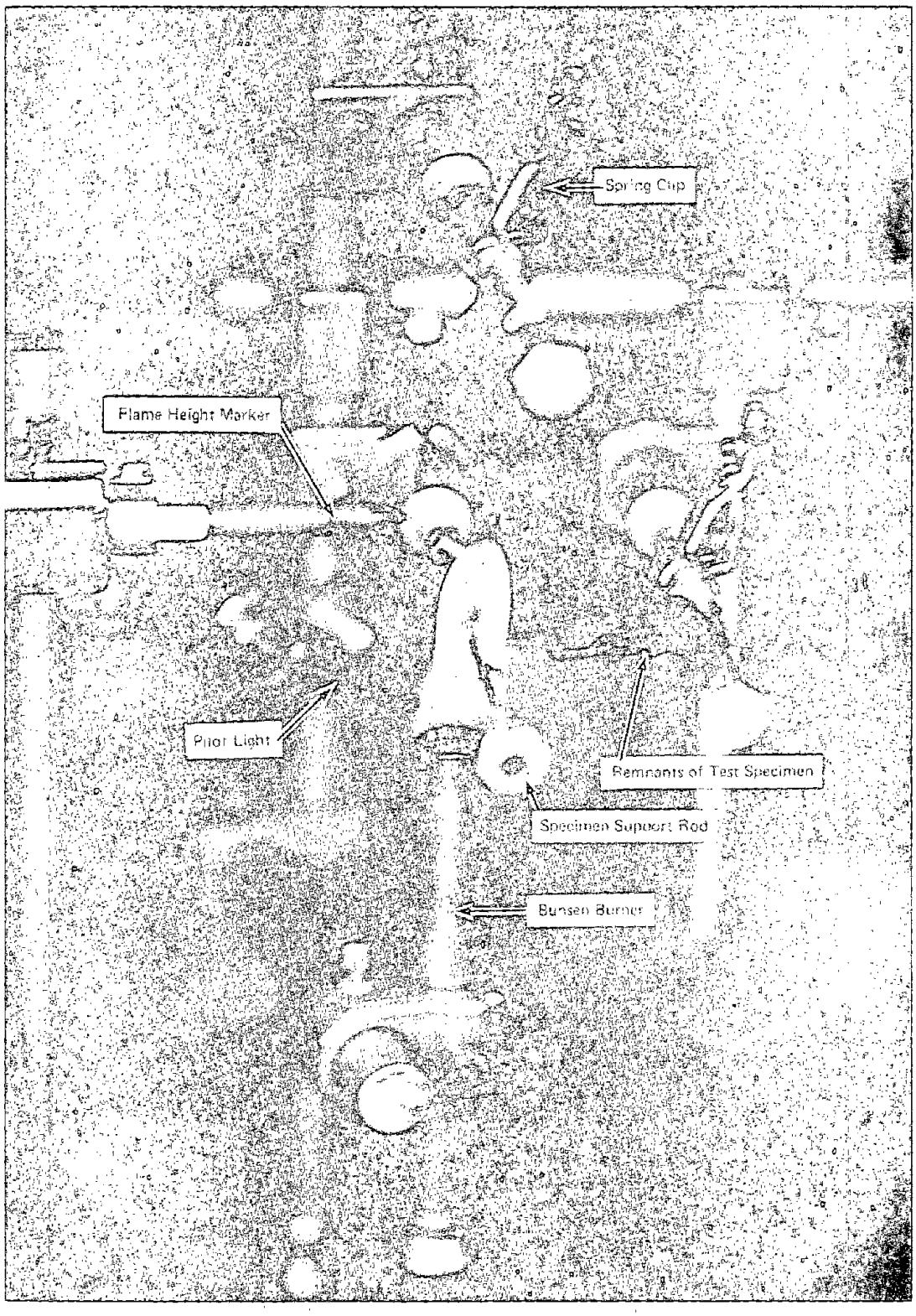

FIGURE 22 FLAME RESISTANCE TEST APPARATUS

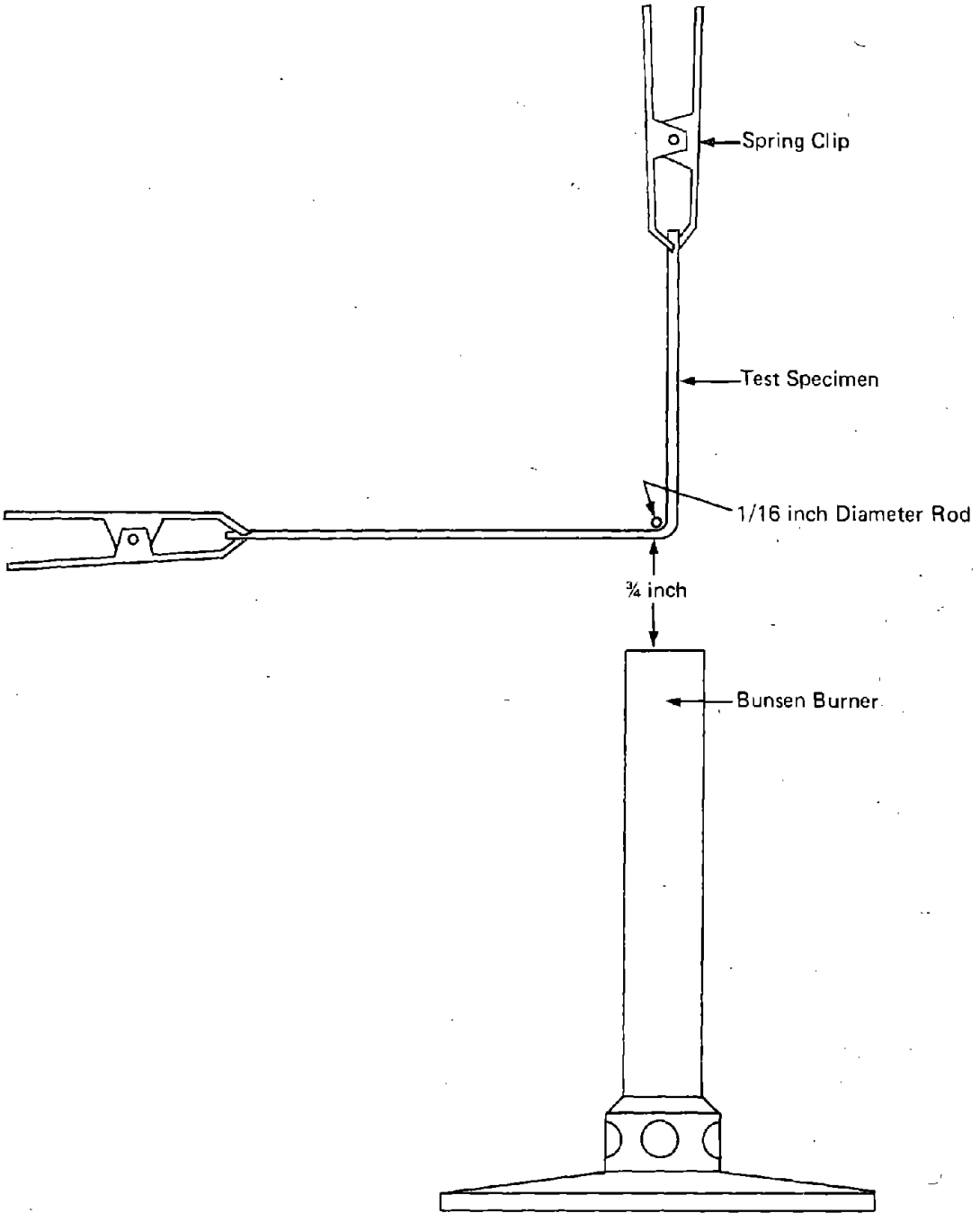

FIGURE 23 RELATIONSHIP OF TEST MATERIAL TO BUNSEN BURNER

160<

5.2 Each conditioned specimen shall be weighed to the nearest 0.1 oz (or nearest 0.1 gm).

5.3 Before the first specimen is tested, the pilot flame shall be adjusted to approximately 1/8 in. high. The burner flame shall then be adjusted to a height of approximately 1 1/2 in. with the gas on/off valve fully open and the air supply completely and permanently off. It is important that the flame height be closely controlled. The 1 1/2-in. height is obtained by adjusting the orifice in the bottom of the burner so that the top of the flame is level with the marked flame height indicator. The burner gas supply shall then be shut off.

5.4 With the burner off, the first specimen to be tested shall be mounted in the support assembly as shown in Figure 23.

5.5 The cabinet door shall then be closed and shall remain closed during testing.

5.6 The burner gas supply shall be turned on – igniting the burner flame – by actuating the on/off valve and the flame applied to the specimen for 12 sec. The gas supply shall then be shut off.

5.7 A record shall be made of the after-flame time, after-glow time, and whether melting or dripping occurred.

5.7.1 The after-flame time shall be considered that time in seconds (to the nearest 0.2 sec) that the specimen continues to flame after the burner flame is shut off.

5.7.2 The after-glow time shall be considered that time in seconds (to the nearest 0.2 sec) that the specimen continues to glow after it has ceased to flame.

5.8 The material specimen shall then be removed and further examined for char length and shrinkage.

5.8.1 The char length shall be determined by measuring the length of the char on both lengths of the "L" to the point where the width of the char becomes less than 1/4 in. (0.5 cm).

5.8.1.1 Char is defined as a discoloration or change in visible surface characteristics of the material under test.

5.9 Additional specimens shall be tested until the requirements of paragraph 3.0 are met.

5.10 After each specimen is removed, the test cabinet shall be cleared of fumes and smoke before the next specimen is tested.

5.11 Each tested specimen shall again be conditioned according to paragraph 5.1 and then weighed to the nearest 0.1 oz (or nearest 0.1 gm).

5.12 The percent consumed shall be calculated as the original weight minus the weight after testing times 100 divided by the original weight, as shown below:

$$\% \text{ consumed} = \frac{W - R}{W} \times 100$$

where

W = original conditioned weight
R = conditioned weight 24 hrs after test

6.0 Report of Test Results

6.1 The after-flame time, after-glow time, char length and percent consumed shall be reported for each specimen. The average after-flame time, after-glow time, char length and percent consumed for each material shall then be calculated and reported.

6.1.1 The after-flame time and after-glow time shall be reported to the nearest 0.2 sec., the char length to the nearest 1/4 in., and the percent consumed to the nearest 0.1 percent.

6.2 Observations made on the extent of melting, dripping and shrinking for each material shall be reported.

7.0 Notes

7.1 During the development of a test method appropriate for evaluating the flame resistance of materials, the following *published methods* were reviewed for applicability, either in part or in whole:

ASTM Method D568-72	Flammability of Flexible Plastics
ASTM Method D626	Fire-Retardant Properties of Treated Textile Fabrics
ASTM Method D757-74	Incandescence Resistance of Rigid Plastics
ASTM Method D777-46 (1965)	Flammability of Treated Paper and Paperboard

ASTM Method D1230-61 (1972)	Flammability of Clothing Textiles
ASTM Method D1433-74	Flammability of Flexible, Thin Plastic Sheeting
ASTM Method D1692-74	Rate of Burning or Extent of Burning of Cellular Plastics Using a Supported Specimen by a Horizontal Screen.
ASTM Method D1929-68	Ignition Properties of Plastics
ASTM Method D162-67 (1973)	Surface Flammability of Materials Using a Radiant Heat Energy Source
Federal Standard 191, Method 5900	Flame Resistance of Cloth; Horizontal
Federal Standard 191, Method 5903.2	Flame Resistance of Cloth; Vertical
Federal Standard 191, Method 5904	Flame Resistance of Cloth; Vertical, Field
Federal Standard 191, Method 5905	Flame Resistance of Material; High Flux Contact
Federal Standard 191, Method 5906	Burning Rate of Cloth; Horizontal
Federal Standard 191, Method 5908	Burning Rate of Cloth; 45° Angle
Federal Standard 191, Method 5920.2	Heating (Spontaneous) of Cloth
British Standard No. 2963	Methods of Test for the Flammability of Fabrics
British Standard No. 3119	Method of Test for Flame-Proof Materials
British Standard No. 3120	Performance Requirements of Flame-Proof Materials for Clothing and Other Purposes
British Standard No. 3791	Clothing for Protection Against Intense Heat for Short Periods

J. A TEST METHOD FOR DURABILITY

1.0 Scope

1.1 This test method determines durability by subjecting a glove to cycles of water, heat and abrasion.

1.2 This test method defines the test procedure, test apparatus and glove positioning within the apparatus.

2.0 Test Gloves

2.1 Each glove shall be tested as a complete glove in new (as-manufactured) condition. This includes liners and outer coverings when they are considered to be an integral part of the glove design.

3.0 Number of Tests

3.1 Three gloves shall be tested for each material and construction combination.

4.0 Test Apparatus

4.1 Three hand forms made of wood, ceramic, plastic or other material of low thermal conductivity (~ 0.2 Btu/hr ft °F or ~ 0.001 cal/sec cm °C) shall be used as *glove supports.*

4.1.1 The hand forms shall be designed with the thumb and fingers extended outward so that the palm side of each form is a flat planar surface.

4.2 The *water exposure test apparatus* shall consist of a glass or plastic vessel large enough to contain three gloves submerged to within 1 in. (2.5 cm) of the top of the wrist covering.

4.2.1 A clamping device shall be used to suspend the three hand forms in the vessel simultaneously.

4.3 The *heat exposure test apparatus* shall consist of two air-circulating ovens large enough to contain three gloves.

4.3.1 The first oven shall be set and controllable at a temperature of 300±10°F (149±6°C).

4.3.2 The second oven shall be set and controllable at a temperature of 150±5°F (66±3°C).

164<

4.4 The *abrasion test apparatus* shall consist of a 2 in. (5.1 cm) x 2 in. (5.1 cm) x 2.1 (5.1 cm) wood block covered on one side by 30- or 36-grit emery cloth.

4.4.1 The block shall have provision for attaching weights totaling 16 lbs. on the side opposite the emery cloth so that, with the emery cloth face down, the bearing pressure will be 4 psi (20.7 cm Hg).

4.5 A *laboratory timer* reading at least 60 minutes shall be used to determine exposure times.

4.6 A record sheet shall be used for each set of three gloves to assure that the number of exposure cycles is monitored and that observations of the condition of each glove are recorded as changes occur. Also, the record sheet shall be used to record the results of further testing after all exposure cycles are complete.

5.0 Test Procedure

5.1 The first three gloves of the same material and construction combination shall be mounted on the hand forms and subjected to 24 cycles of the following exposures:

5.1.1 Each of the three gloves shall be immersed in 65-75°F (18-24°C) water to within 1 in. of the top of the wrist covering. The gloves shall remain immersed for 20 minutes.

5.1.2 Each of the three gloves shall be removed from the water, shaken free of excess water and placed in the 300°F oven for 10 minutes.

5.1.3 Each of the three gloves shall be removed from the first oven and placed in the 150°F oven for an additional 20 minutes.

5.1.4 Each of the three gloves shall be removed from the second oven and placed palm-up on a flat surface. The palm side and back side of each glove shall be abraded with the emery-cloth-surfaced-block under a bearing pressure of 4 psi. The block shall be moved through two traversals in each of two directions at right angles to each other on both the palm and back.

5.2 During each exposure cycle, observations shall be recorded concerning visible changes in each glove – such as fading color, fraying material or other signs of wear.

5.3 Following the 24 cycles of exposures, the three gloves shall be evaluated for retention of criteria-established properties by the following test schedule:

5.3.1 Two of the gloves shall be tested for dexterity according to test Method G of this report. One glove shall be tested dry, the other wet.

5.3.2 Following dexterity testing, the palm side of the glove tested for dry dexterity shall be tested for resistance to flame according to test Method I of this report.

5.3.3 The back side of the glove tested for dry dexterity shall be tested for resistance to radiant thermal energy penetration according to test Method E of this report. The energy level shall be determined by the intended use of the glove.

5.3.4 The palm of the glove tested for wet dexterity shall be tested for resistance to conductive thermal energy penetration according to test Method E of this report.

5.3.5 The back side of the glove tested for wet dexterity shall be tested for resistance to water penetration according to test Method H of this report.

5.3.6 The palm of the third glove shall be tested for resistance to static puncture according to test Method C of this report.

5.3.7 The back side of the third glove shall be tested for resistance to static cut according to test Method A of this report.

5.4 Additional sets of three gloves shall be tested until the requirements of paragraph 3.0 are met.

6.0 Report of Test Results

6.1 A summary of the observations made on each glove during the exposure cycles shall be reported for each material and construction combination.

6.2 The results of the six retention-of-property tests shall be reported according to the format described in each method.

7.0 Notes

7.1 During the development of test methods appropriate for evaluating the durability or aging characteristics of materials, the following published methods were reviewed for applicability, either in part or in whole:

- **Retention of Properties (Aging)**

ASTM Method D573-67 Accelerated Aging of Vulcanized Rubber by the Oven Method

ASTM Method D750-68	Operating Light- and Weather-Exposure Apparatus (Carbon-Arc Type) for Artificial Weather Testing of Rubber Compounds
ASTM Method D756-56 (1971)	Resistance of Plastics to Accelerated Service Conditions
ASTM Method D1499-64 (1971)	Operating Light- and Water-Exposure Apparatus (Carbon-Arc Type) for Exposure of Plastics

- **Abrasion Resistance**

ASTM Method D1175-71	Abrasion Resistance of Textile Fabrics
ASTM Method D673-70	Mar Resistance of Plastics
ASTM Method D1242-56 (1969)	Resistance to Abrasion of Plastic Materials
Federal Standard 191, Method 5300.1	Abrasion Resistance of Cloth; Flexing, Folding Bar (Stoll) Method
Federal Standard 191, Method 5302	Abrasion Resistance of Cloth; Inflated Diaphragm (Stoll) Method
Federal Standard 191, Method 5304.1	Abrasion Resistance of Cloth; Oscillatory Cylinder (Wyzenbeek) Method
Federal Standard 191, Method 5306	Abrasion Resistance of Cloth; Rotary Platform, Double-Head (Taber) Method
Federal Standard 191, Method 5308	Abrasion Resistance of Cloth; Uniform Abrasion (Schiefer) Method
Federal Standard 191, Method 5309.1	Abrasion Resistance of Textile Webbing
Federal Standard 311, Method 3011	Colorfastness (Resistance to Rubbing), AATCC Crockmeter
Federal Standard 311, Method 3031	Colorfastness (Resistance to Rubbing), Precision Crockmeter
Federal Standard 311, Method 4311	Abrasion Resistance of Leather (Deleted from Federal Standard)
AATCC Method 93	Abrasion Resistance of Fabrics; Accelerated Method

U.S. GOVERNMENT PRINTING OFFICE: 1977—757-057/5749

BIBLIOGRAPHIC DATA SHEET	1. Report No. NIOSH-77-134-B	2.	PB275355

4. Title and Subtitle

THE DEVELOPMENT OF CRITERIA FOR FIREFIGHTERS' GLOVES
VOLUME II: GLOVE CRITERIA AND TEST METHODS

5. Report Date Feb. 1976

6.

7. Author(s)

8. Performing Organization Rept. No.

9. Performing Organization Name and Address

Arthur D. Little, Inc.
Cambridge, Massachusetts 02140

10. Project/Task/Work Unit No.

11. Contract/Grant No. CDC-99-74-59

12. Sponsoring Organization Name and Address

National Institute for Occupational Safety and Health
4676 Columbia Parkway
Cincinnati, Ohio 45226

13. Type of Report & Period Covered

14.

15. Supplementary Notes

16. Abstracts

The quantitative development is traced of the glove criteria which are summarized in the recommendations for glove standards in Volume I. The criteria are based on hand protection and other requirements and design considerations. The test method devised for validating the protective and other properties of firefighters gloves are described. Methods for resistance to cutting, puncturing, heat and water penetration, electricity, and for dexterity and durability are given.

17. Key Words and Document Analysis. 17a. Descriptors

Protective clothing
Standards
Performance tests
Performance standards
Fire protection
Fire fighting
Fire resistance
Fire tests
Materials tests

17b. Identifiers/Open-Ended Terms

Hand protection
Personal protective equipment

17c. COSATI Field/Group 06/Q

REPRODUCED BY
NATIONAL TECHNICAL INFORMATION SERVICE
U.S. DEPARTMENT OF COMMERCE
SPRINGFIELD, VA. 22161

18. Availability Statement

Release unlimited

19. Security Class (This Report) UNCLASSIFIED

20. Security Class (This Page UNCLASSIFIED

21. No. of Pages 179

22. Price A09 - A01