8 Hazard Prevention and Control of Exposures to Diacetyl and 2,3-Pentanedione

8.1 Introduction

Employee exposure to air contaminants can best be reduced by a combination of efforts to minimize air contaminant generation through good work practices and to control emissions at their source through process changes or engineering controls. Traditionally, a hierarchy of controls has been used to determine how to implement feasible and effective controls. One representation of this hierarchy can be summarized as follows:

- Elimination/Substitution
- Engineering controls
- Administrative controls (including work practices)
- Personal protective equipment

The idea behind this hierarchy is that the control methods at the top of the list are potentially more effective, protective, and economical (in the long run) than those at the bottom. Following the hierarchy normally leads to the implementation of inherently safer systems where the risk of illness or injury has been substantially reduced.

The first item in the hierarchy is elimination/substitution. The intention of eliminating a flavoring or other chemical in the workplace is to remove the exposure by removing the source. Similarly, the goal of substitution is to substitute a flavoring or chemical with another of lower toxicity. The removal of diacetyl and 2,3-pentanedione from the flavor manufacturing or flavoring industries would be practical only with the substitution of an alternative butter flavor chemical, which is currently being done in some situations. However, the current knowledge on toxicity of available substitutes is limited, and exposure to substitutes may also need to be controlled. Therefore, elimination and substitution may not provide a feasible control and are not discussed in detail. The recommendations that follow are applicable not only to diacetyl and 2,3-pentanedione, but also to other flavorings and flavoring compounds used in this industry.

Engineering controls, as discussed below, are mechanical techniques for removing contaminants from the workplace. For instance, local exhaust ventilation can be used to capture and remove emissions from a hazardous or nuisance source. A major advantage of this type of system is that, when properly designed, it requires minimal user effort or training.

Work practices are procedures followed by employers and employees to control hazards in the workplace. The use of good work practices, incorporated into the facility's standard operating procedures, can help reduce exposures to diacetyl, 2,3-pentanedione, and other flavoring compounds while at the same time maximizing efficiency and product quality. Work practices include housekeeping and cleaning, storage and use procedures, work clothes, labels and postings, hazard training, and procedures for use of engineering controls. NIOSH has recently published additional engineering and work practice control guidance for employees who are exposed to diacetyl [NIOSH 2015].

The use of respirators, a form of PPE, is discussed because this control, while not favored, is in common use in some facilities. As the discussion demonstrates, considerable effort is required in the proper selection and use of respiratory protection in the workplace. Finally, the protection of skin, eyes, and face is also discussed.

8.2 Engineering Controls

Currently, there is no model or standard guidance for engineering controls for flavoring and food production processes. If it is not possible to eliminate toxic compounds from the workplace or replace them with less toxic substances, then the use of engineering controls and work practices to minimize exposures is the next level of controls for the necessary reduction of exposure.

8.2.1 General Considerations

A properly designed supply air ventilation system can provide plant ventilation, building pressurization, and exhaust air replacement. When LEV is installed in production areas, it is important to consider the need for replacement air. In general, it is necessary to balance the amount of exhausted air with a nearly equal amount of supply air. Without replacement air, uncontrolled drafts will exist at doors, windows, and other openings; doors become difficult to open because of the high pressure difference; and exhaust fan performance may degrade. Good supply air design consists of ducted supply with air discharge registers about 10 feet above floor level [ACGIH 2013].

Controls need to be fitted to individual processes by each plant and cannot be a "one-size-fits-all" approach. Controls need to be evaluated after installation. Evaluations should be completed to quantify exposures after controls have been implemented to ensure that target goals have been achieved. It is important to confirm that the LEV system is operating as designed by periodically measuring exhaust airflows. A standard measurement, hood static pressure, provides important information on the hood performance, because any change in airflow results in a change in hood static pressure. For hoods designed to prevent exposures to hazardous airborne contaminants, the ACGIH Operation and Maintenance Manual recommends the installation of a fixed hood static pressure gauge [ACGIH 2007].

In addition to routine monitoring of the hood static pressure, additional system checks should be completed periodically to ensure adequate system performance, including smoke tube testing, hood slot/face velocity measurements, and duct velocity measurements using an anemometer. These system evaluation tasks should become part of a routine preventive maintenance schedule to check system performance. It is important to note that the collection and release of air contaminants may be regulated; companies should contact agencies responsible for local air pollution control to ensure compliance with emissions requirements when implementing new or revised engineering controls.

To minimize exposure and reduce the risk of flavoring-related lung disease, a few standard precautions should be followed in areas where flavoring-related exposures may occur:

- Isolate rooms where flavorings or flavoring compounds are handled from the rest of the plant with walls, doors, or other barriers.
- Maintain flavoring mixing rooms and other areas where flavorings are handled under negative air pressure relative to the rest of the plant. Check status with airflow indication equipment such as a smoke tube.

- Install hood static pressure gauges (manometers) near hoods to provide a way to verify proper hood performance. Check pressure frequently to ensure that the system is operating properly compared to baseline. Check hood face velocities and capture velocities frequently to ensure that system is performing as designed.
- Ensure that employees are properly trained on the use of the controls if using proximity switches for fan activation. Consider installing a control "on/off" light to indicate the status of the exhaust fan.
- Place hoods away from doors, windows, air supply registers, and aisles when possible to reduce the impact of cross drafts.
- Provide supply air to production rooms to replace most of the exhausted air.
- Direct exhaust air discharge stacks away from air intakes, doors, and windows.
- Inspect hoods and enclosures for signs of damage or leaks (rust/corrosion, open access doors, etc.) and obstructions (paper, gloves, rags, etc.). Where possible, use screens to prevent foreign objects from being pulled into the system through openings (slots, hood faces, etc.).

8.2.2 Primary Production Processes and Controls

The food and flavoring production industries have several primary processes that may result in increased potential for employee exposure to diacetyl, 2,3-pentanedione and other flavoring compounds. These may be grouped, from an exposure standpoint, into a few general categories including production operations, packaging operations, cleaning, and maintenance operations [Eastern Research Group 2008b]. Employees in each of these job categories may potentially be exposed to flavoring compounds, including diacetyl and 2,3-pentanedione. Table 8-1 displays a list of job categories and work activities associated with these manufacturing processes. For each activity, the section of this document that discusses relevant exposure control and the figure(s) at the end of this chapter that shows relevant LEV systems are indicated. Other job categories may potentially be exposed to flavoring compounds. These include supervisory personnel, laboratory and quality controls personnel, and cleaning and maintenance personnel. When these personnel are in production areas, they should comply with recommended control procedures and wear appropriate PPE posted for that specific area. Additional considerations

Table 8-1. Controls for job categories and major activities in the food and flavor production industries

Job category	Major activities	See section	See figure(s)
Production operator	Benchtop weighing and handling	8.2.2.1	8-1, 8-2, 8-3, 8-4
	Charging/filling tanks and mixers	8.2.2.2	8-5, 8-6, 8-7, 8-8
	Bag dumping/emptying	8.2.2.3	8-9
	Drum filling and emptying	8.2.2.4	8-10, 8-11
Packaging personnel	Bag filling	8.2.2.5	8-12, 8-13
	Drum filling and emptying	8.2.2.4	
Quality assurance/ quality control personnel	Benchtop weighing and handling	8.2.2.1.1	8-4

may be necessary for the maintenance job category, specifically for intermittent tasks such as filter change out.

Many different industries have implemented engineering controls to reduce exposure and risk of disease among their employees. Many of the processes used in the flavoring and food manufacturing industries are similar to those of other industries and may allow for common approaches to reducing employee exposure. These processes include blending, mixing, and handling of flavoring compounds in liquid and powder form. The design concepts required for working with hazardous materials include specification of general ventilation, LEV, maintenance, cleaning and disposal, PPE, exposure monitoring, and medical surveillance [Naumann et al. 1996]. Bag emptying, bag filling, charging tanks, benchtop weighing and handling, and drum filling and emptying are a few of the production processes of concern. Other more specialized processes (for example, candy panning, a process in which candy pieces in a rotating drum are sprayed with chocolate or other flavoring compounds) may also result in employee exposure. Special attention should be given to manual handling of flavoring compounds, particularly in heated processes, and when spraying flavoring compounds.

Research into various food industries has led to the development of potential engineering controls to help reduce employee exposure to diacetyl, 2,3-pentanedione and other chemicals. The following sections describe the primary production processes used in the food and flavoring industries and discuss engineering controls that can be used to minimize employee exposure to diacetyl, 2,3-pentanedione and other potential airborne hazards.

8.2.2.1 Benchtop weighing and handling

Small-scale weighing and handling of ingredients are common tasks used in flavoring production, bakeries, dairy production, and snack food manufacturing. The tasks of weighing out dry and wet food ingredients can lead to employee exposure primarily through the scooping, pouring, and dumping of these materials. Studies in bakeries have shown that the employees exposed to dusts, commonly from flour, are those who perform mixing and weighing tasks [Elms et al. 2003]. In addition, a recent survey at a commercial bakery showed that mixer operators were exposed to diacetyl when they measured and added an artificial butter flavor to a dough mixer [Eastern Research Group 2008a]. Because weighing and pouring are often performed on a benchtop workstation, the addition of slotted backdraft ventilation for both the bench and the weighing area is recommended. This approach can also be applied to larger-scale operations.

The application of engineering controls to reduce employee exposure to chemicals during mixing and weighing has been evaluated in flavoring production. In flavoring production facilities, compounders measure and pour flavoring compounds on a bench and then transfer these mixtures to open tanks for liquid flavoring production or to blenders used for powdered flavoring production. The use of ventilated backdraft workstations, adapted from welding bench designs available in the ACGIH Industrial Ventilation Design Manual (Figure 8-1) has been evaluated by NIOSH in two field studies conducted in flavoring production plants [ACGIH 2013].

Ventilated back-draft workstations used for small batch mixing have been evaluated in two field studies conducted in flavoring production plants (Figure 8-2). These stations were designed to maintain an air velocity of 100–150 feet per minute (fpm) at the face of the enclosure. The field studies showed reductions in exposure of 90%–97% when performing mixing tasks using these stations [NIOSH 2008c, d]. The key design parameters are to

enclose as much of the activity as possible and to use properly sized exhaust slots to maintain a uniform air velocity across the face of the station.

Other groups have also produced designs that may be amenable to the control of exposure during benchtop mixing and weighing activities. The HSE has developed a series of control approaches based on common processes in a variety of industries. One approach is similar to the one evaluated by NIOSH in flavoring facilities and recommends a control velocity of 100–200 fpm (0.5–1 meters per second [m/s]) at the face of the workstation when working with flour improvers (Figure 8-3) [Health and Safety Executive 2003i].

The selection of proper control velocity should be made on the basis of the material being used (powder versus liquid), plant conditions (background drafts), and momentum of contaminant source (pouring versus spraying or vigorous mixing). The use of baffles on the side and top of these workstations to better enclose the process provides improved control and minimizes the deleterious effects of cross drafts on contaminant control. Plastic curtains can provide reasonable enclosure while allowing improved access to the bench area. The proper positioning of these workstations away from doors, windows, air supply registers, and aisle ways will also help to reduce the impact of cross drafts.

8.2.2.1.1 Laboratory chemical hoods

Laboratory personnel will typically perform benchtop weighing and handling of flavorings in a chemical fume hood. A properly designed and maintained chemical fume hood can offer significant employee protection if used properly. There are many different hood designs, but the most common categories are the conventional or constant-flow hood, the bypass hood, and the variable air volume constant-velocity hood. The constant-flow hood is the oldest and simplest chemical hood design. The exhaust fan induces a constant volumetric airflow moving through the sash opening. For this hood design, the face velocity is lowest when the sash is wide open; when the sash is lowered the face velocity increases. The bypass hood maintains a constant hood face velocity and incorporates a bypass grille above the sash opening. When the sash is wide open it blocks the bypass grille, allowing all of the air to flow through the hood opening. As the sash is lowered, it uncovers increasingly greater amounts of the bypass grille, allowing increasing amounts of air to flow through this alternative path. If it is designed and operated properly, the amount of air flowing through the bypass grille is just sufficient to maintain a constant face velocity. Typically, however, this constant velocity can be maintained over a certain part of the sash's total range. The constant-velocity hood uses a control system to detect the sash position, face velocity and system pressure, and change the fan motor speed or other mechanism, such as mechanical dampers, to increase the airflow when the sash is raised and decrease it when the sash is lowered, thus maintaining a constant face velocity.

All chemical hoods have certain common design elements, including an exhaust fan to move air through the hood, a moving sash, exhaust slots, and a horizontal work surface (Figure 8-4). The sash can be designed to move in either a vertical or a horizontal direction. A crucial performance element for any chemical hood is the face velocity, defined as the average air velocity at the face of the hood at the sash opening. Maintaining a constant, minimum face velocity provides confidence that operations and hazardous agents within the hood will be contained. The current consensus of the literature is that the average face velocity for a laboratory chemical hood should be in the range of 80–120 fpm [Burgess et al. 2004]. The flow control system on a constant-velocity

hood should be adjusted to give a face velocity in this range. Each chemical hood should be clearly marked with the proper hood sash location that will give the desired face velocity; depending on the hood design, this could be a single location or a range of locations. Containment verification using tracer gases to provide quantitative data and smoke testing to visualize airflow patterns is recommended when the hood is installed, when substantial changes are made to the ventilation system, and periodically as part of a preventive maintenance program. In addition to the face velocity, it is important that the airflow be distributed evenly across the hood face. ANSI/AIHA Z9.5 [2003] recommends that variations of velocity across the hood face should be within ±20% of the average face velocity; however, some laboratories select a stricter standard of ±10%.

8.2.2.2 Charging/filling tanks and mixers

The addition of solid and liquid ingredients into tanks and other mixing vessels can cause exposure to dusts and vapors due to the displacement of air in the vessel. Medical and environmental surveys conducted in the microwave popcorn manufacturing industry have shown that employees who mixed butter flavorings into heated soybean oil had the highest exposures to diacetyl and the highest risk of developing severe irreversible lung disease [Kanwal et al. 2006]. These employees measured out artificial butter flavoring in open containers and poured the flavoring into heated mixing tanks filled with oil. Real-time monitoring of a mixer at one plant measured a diacetyl peak of more than 80 ppm over several minutes as he poured flavorings into the mixing tank [Kanwal et al. 2006]. NIOSH investigations at a plant where many exposed employees developed severe lung disease also showed that the implementation of LEV for heated tanks of oil and flavorings and general dilution ventilation for production areas reduced diacetyl concentrations. As a result of the implementation of exposure controls, average personal diacetyl air concentrations declined in the mixing room, from 57.2 ppm to 2.88 ppm [Kanwal et al. 2011]. Exposures to diacetyl were also recorded at a plant that produced flavorings and other products in employees who added flavors to mixing and spray dryer feed tanks while the tanks were being filled. One employee who was adding diacetyl-containing starter distillate and starch to a spray dryer slurry feed tank was exposed to elevated levels of volatile organic compounds including diacetyl for a sustained period of time [NIOSH 2009]. In addition, elevated concentrations of volatile contaminants were measured as an employee poured diacetyl-containing starter distillate from a collection vessel into a bulk container.

The use of controls to reduce employee exposure during pouring and mixing of ingredients in a commercial mixer has been evaluated in a flavoring production plant [NIOSH 2008d]. The implementation of LEV at the mixing tank helps to maintain the vessel at a negative pressure and contain evaporative emissions. NIOSH evaluated the impact of a ventilated tank lid on the exposure of an employee during the mixing of a food flavoring (Figure 8-5) [NIOSH 2008d]. The use of the ventilated tank lid resulted in a reduction of approximately 76% compared to the same operation without the ventilated tank lid. However, most of the exposure during the evaluated mixing process was attributed to tasks performed outside of the hood. Ventilated tank lids have also been recommended by the HSE to contain vapors during the mixing of liquids with other liquids or solids [Health and Safety Executive 2003e]. A NIOSH laboratory study of different mixing tank hood designs for a 4 foot diameter tank showed that capture efficiencies above 90% were possible for all hoods and configurations at an exhaust flow rate of 200 cubic feet per minute (cfm) with a crossdraft of 100 fpm or less [Hirst et al. 2014].

Another approach evaluated by NIOSH at a flavoring manufacturing facility was the use of a ventilated mixing booth. This booth allows a large portable mixing tank to be rolled inside so that chemical vapors emitted during pouring and mixing of flavoring compounds in the tank are captured and exhausted (Figure 8-6). However, the booth provides some flexibility and can also be used for other production tasks such as large pouring and product packaging activities. The use of slots across the booth plenum helps evenly distribute the flow across the height and width of the booth. A field study showed hood capture efficiencies of greater than 95% based on tracer gas tests [Dunn et al. 2008]. An important design consideration is to make the booth deep enough to fully contain the process.

Other approaches to controlling exposure during filling of mixing vessels and tanks include the use of a simple exhaust hood near the opening of fixed tanks. This approach is highlighted in the HSE Control Approach 210, titled "Charging Reactors and Mixers from a Sack or Keg" (Figure 8-7) [Health and Safety Executive 2003a]. This design calls for the use of a local exhaust hood near the tank opening with an inward velocity of at least 200 fpm. Another design provided by the HSE and ACGIH for mixers and tanks includes the use of rim exhausts placed around the edge of the mixer/tank. These designs take the shape of an annular slotted hood, which pulls air away from employees as they add ingredients or operate the mixer (Figure 8-8) [ACGIH 2013; Health and Safety Executive 2003f]. An annular exhaust provides a semicircular ventilation ring around the edge of the tank to capture contaminants as they evaporate or are displaced during pouring/mixing. Typical rim exhausts, however, are limited in the area where they can provide adequate capture velocity and should not be used to capture contaminants beyond approximately 24 inches from the hood face [Goodfellow and Tähti 2001].

8.2.2.3 Bag dumping/emptying

Manual handling of solid powders is a process used in many industries, including food and flavoring production. The opening and dumping of bags of powdered ingredients is commonly performed by employees in the production of flavorings, dairy products, snack foods, and in baked goods. Typically, an employee cuts open bags of material (e.g., 50-pound bags) and dumps the ingredients into a hopper, and then stacks or disposes of the empty bags. In powdered flavoring production, these hoppers are commonly outfitted onto blenders used to load the base starch ingredient for dry flavor blends. In snack food production, they may be used to load spices and flavors for application to the product via open drum coaters just before packaging. These open-ended devices typically are used to coat larger, more irregularly shaped materials such as cereal flakes or expanded snacks. Coatings may be applied as a slurry or as a dry mix following spray application of oil or lecithin. The drums rotate as the flavoring is being applied to allow for even coverage of the snacks. This process can cause employee exposure to the powdered flavoring; a case of bronchiolitis obliterans organizing pneumonia was reported in a spice process technician whose primary responsibility was to manually dump spices from bags into a slurry for application to potato chips [Alleman and Darcey 2002].

Technology used to control dusts during bag dumping has been in place for many years. The standard control—a ventilated bag dump station—consists of a hopper outfitted with an exhaust ventilation system to pull dusts away from employees as they open and dump bags of powdery materials. The designs for these devices are available from several sources of industrial ventilation guidance. The HSE has

developed a control approach for a ventilated station for emptying bags of solid materials. The control includes the specification of a face velocity of 200 fpm (1.0 m/s) and includes a waste bag collection chute (Figure 8-9) [Health and Safety Executive 2003g].

Research into the effectiveness of these types of devices has shown that they can effectively reduce employee exposure to dust and vapors. A review of commercially available units showed that their use controlled dust levels to 1–2 mg/m^3 [Heitbrink and McKinnery 1986]. However, dust contamination on the surface of the bag and handling or disposal of bags caused increased employee exposure. An integral pass through to a bag disposal chute or compactor will help reduce dust exposure resulting from bag handling. Further studies in mineral processing plants showed that the use of an overhead air supply also significantly decreased employee exposure [Cecala et al. 1988].

The ACGIH Ventilation Manual also has two designs that are applicable to the control of powder materials during bag dumping. Design plate VS-15-20, Toxic Material Bag Opening, is similar in design to the HSE station described above but recommends a slightly higher control velocity of 250 fpm at the face of the station opening. In addition, Design plate VS-50-10, Bin and Hopper Ventilation, requires a hood face velocity of 150 fpm. In general, higher velocities may be needed to adequately capture dusts in a plant environment. Air velocities around 200 fpm into the hood should provide reasonable contaminant removal for these operations [ACGIH 2013].

8.2.2.4 Drum filling and emptying

In some cases, manually operated and powered pumps have been used to transfer liquids from barrels to mixing and feed tanks. Although the use of these devices can reduce exposure by reducing the amount of open handling, care should be taken when filling and emptying drums of flavoring compounds. The use of ventilation at the barrel opening has been recommended for capture of vapors during transfer of chemicals. The HSE has developed two engineering control approaches for drum filling and emptying (Figure 8-10) [Health and Safety Executive 2003b, c]. For drum filling, the guidance recommends the use of an annular exhaust hood around the interface between the drum and feed pipe (at the bung hole). The recommended airflow is a minimum of 100 fpm across the drum cap/bung hole. The use of a pump to move flavoring compounds or finished flavorings for packaging may provide a preferable "closed transfer" approach [Health and Safety Executive 2003b]. For flammable liquids, suitable fans and equipment as well as appropriate grounding schemes should be used to prevent the buildup and discharge of static electricity. The ACGIH Ventilation Manual also has developed a design plate with several different implementation options based on the process (Figure 8-11) [ACGIH 2013]. In all cases, grounding and bonding requirements should be met to prevent sparks and explosions when transferring flammable liquids [NFPA 2007].

8.2.2.5 Bag filling

The process by which bags are filled with products is typically done by flavor manufacturers and other producers of powder materials. Powder flavorings are typically mixed with industrial blenders or produced by a spray drying process. For the blending process, a powdered starch or other carbohydrate is combined with a liquid or paste flavoring agent. When the blending is completed, the powder product may be discharged into a bulk tote or packaged into smaller containers. In the spray drying process, a mixture of liquid and powder ingredients (slurry) is sprayed within a large sealed tank. Heat within the tank dries the slurry droplets, leaving a powder as the

finished product. This powder is then collected and packaged in product containers.

Studies conducted at flavoring production facilities have shown that intermittent peak exposures to dust and flavoring volatile ingredients occur when powder products are being packaged following blending or spray drying [NIOSH 2007, 2008a, b, 2009]. The use of a ventilated collar-type hood around the discharge point can help minimize employee exposure to dust and vapors. The HSE has developed a control approach for an exhaust hood for the filling of bags with solid materials. The control includes the specification of a ventilated enclosure around the powder discharge outlet and has applicability to the filling of smaller product bags as well as intermediate bulk containers (Figure 8-12) [Health and Safety Executive 2003d, h]. This design guidance recommends an air velocity of 200 fpm (1.0 m/s) into the enclosure. The ACGIH Industrial Ventilation Manual, Design plate VS-15-02, Bag Filling, is similar in design to the HSE exhaust hood but specifies an overall hood exhaust flow of 400–500 cfm for nontoxic dust or 1,000–1,500 cfm for toxic dust with a maximum inward air velocity of 500 fpm [ACGIH 2013].

In addition to ventilation solutions, other dust control approaches have been used in a variety of industries and should be applicable for food and flavoring production. For example, an inflatable seal can be used to create a dust tight seal on the discharge outlet of an industrial blender (Figure 8-13). The outlet spout can be fitted with an inflatable seal that prevents dust from escaping during the bag filling process. The seal inflates during the product transfer from the blender to the packaging bag (providing the seal) and deflates once the transfer is completed to allow removal of the packaging bag. These systems are available on many commercially available bulk bag filling systems [Hirst et al. 2002].

Another system that can be used is the continuous liner system. Polypropylene liners are often used when products are discharged from the industrial blenders into the final product container. In this operation, a sleeve of polypropylene liners is stowed around the circumference of the discharge outlet. The first liner, the bottom having been sealed, is pulled down into the overpack (usually a 5-gallon bucket or a cardboard box). Product is discharged into the liner through a butterfly valve on the blender outlet. Once full, the top of the first liner sleeve is closed with tape or a fastener, or it is heat sealed and cut. The product is sealed within the poly-lined container, and a new sealed poly-liner is pulled down to start discharge into the next container. This continuous process seals off the primary leak paths for dust during unloading of an industrial blender or other equipment. These systems are commonly used in the pharmaceutical industry and may provide effective alternatives to traditional local exhaust ventilation control systems for food and flavoring production.

8.2.3 Summary of Capture Efficiencies of Control Approaches

Producing flavorings and flavored foods involves a variety of steps. These processes require the handling and manipulation of flavorings and flavoring compounds, which have been shown to be a point of exposure for employees. Table 8-2 shows the capture efficiencies of those controls which have been evaluated by NIOSH in the laboratory or in flavoring manufacturing plants and discussed in this chapter. These controls have shown to be effective at reducing potential employee exposure by 90% or greater across the wide range of processes and tasks commonly seen in flavoring and flavored food production. However, for some tasks, this may not be enough to reach the exposure control goals. When implementing engineering controls, it

Table 8-2. Summary of efficiencies for controls evaluated for the mixing of food flavorings by NIOSH

Process	Control	Evaluation	% Reduction (vs. no control)	Source
Benchtop Weighing and Handling	Slotted exhaust hood/ workstation enclosure	Simulated mixing/weighing with alcohol	97	NIOSH 2008d
	Slotted exhaust hood/ worktable	Simulated mixing/weighing with alcohol	89–100	NIOSH 2008c, Dunn et al. 2008
Bag Dumping/ Emptying	Bag dump/slotted exhaust around perimeter	Dumping of 50 lb dextrose bags	96	NIOSH 2008d
Bag Filling	Simple exterior exhaust hood	Discharge of dextrose from blender into 15 gallon containers	97	NIOSH 2008d
	Simple exterior exhaust hood	Scooping/packaging of dextrose into 15 gallon containers	64	NIOSH 2008d
Charging/ Filling Tanks and Mixers	Ventilated tank lid	Preparation of a food flavor in a large mixing tank	76	NIOSH 2008d
	Dome hood–1.5 inch gap/200 cfm EX/100 fpm CD	Tracer gas emission from mixing tank	99	Hirst et al. 2014
	Ventilated hinged lid/200 cfm EX/100 fpm CD	Tracer gas emission from mixing tank	98	Hirst et al. 2014
	Slot hood open/200 cfm EX/100 fpm CD	Tracer gas emission from mixing tank	96	Hirst et al. 2014
	Slotted back draft booth	Tracer gas emission from mixing tank	97–98	NIOSH 2008c, Dunn et al. 2008

CD = crossdraft
EX = exhaust flow rate

is important to use a tiered approach, which includes reducing the emissions at the source through containment, process modifications, or local exhaust ventilation as well as using facility provisions such as pressurization schemes. These approaches should be used in conjunction with those described below including administrative controls and the use of personal

protective equipment.

8.3 Administrative Controls

Work practices, an administrative control, are procedures followed by employers and employees to control hazards in the workplace. The use of good work practices, incorporated into the facility's standard operating procedures, can help reduce exposures to diacetyl, 2,3-pentanedione, and other flavoring compounds while at the same time maximizing efficiency and product quality. Work practices include housekeeping and cleaning, storage and use procedures, work clothes, labels and postings, hazard training, and procedures for use of engineering controls, many of which are discussed here.

The emission of the volatile components in each flavoring mixture can be minimized by preventing spillage. To the extent possible, containers used to mix and store flavoring compounds should be covered when not in use. This practice will minimize the evaporation of chemicals into the workplace air and minimize likelihood of inadvertent spills. Manual handling of chemicals also provides a potentially significant source of employee exposures and emissions. Use of closed transfer processes, where feasible, significantly reduces exposure. Also, slow careful pouring/handling of chemicals can reduce splashing, spillage, and exposure during this activity [Boylstein et al. 2006]. Reduction in spills and elimination of leakage from vessels aid in reducing the overall emission of chemicals into the workplace and lower employee exposure.

8.3.1 Good Housekeeping Practices

An organized, clean workplace enables faster and easier production, improves quality assurance, and reduces the potential for slips, trips, and falls. It is important to maintain good general housekeeping practices so that leaks, spills, and other process integrity problems are readily detected and corrected. Proper practices regarding spills include:

- Allowing only individuals wearing appropriate PPE who are properly trained, equipped, and authorized for response to enter the affected area until the cleanup has been completed and the area properly ventilated.
- Using high-efficiency particulate air (HEPA)-filtered vacuums, wet sweeping, or a properly enclosed wet vacuum system for cleaning up dust that contains diacetyl or 2,3-pentanedione. Dust should be treated as dust containing diacetyl and not as nuisance dust.
- Cleaning work areas regularly with HEPA-filtered vacuums or with wet sweeping methods to minimize the accumulation of dust.
- Cleaning up spills promptly.
- Limiting accumulations of liquid or solid materials on work surfaces, including floors, to reduce contamination of products and the work environment.

8.3.2 Closed Transfers, Containers, and Processes

Because of the volatile nature of diacetyl, 2,3-pentanedione and other flavoring compounds, proper handling to limit the duration of exposure to vapors is essential. The use of closed vessels and closed transfer procedures is one technique to promote proper handling. To limit exposure time:

- Avoid open pouring, measuring, and transfer of diacetyl, 2,3-pentanedione, and other flavoring compounds on the FEMA priority list whenever possible [FEMA 2012].

- Add diacetyl, 2,3-pentanedione and other priority chemicals into tanks last, when possible, to minimize the time during which volatilization can occur.
- Keep tanks and containers of flavoring compounds/ingredients sealed at all times.
- Maintain and use volatile flavoring compounds at the lowest possible temperature within the manufacturers' recommended temperature range for each chemical to minimize volatility.
- Use appropriate personal protective equipment during cleaning of diacetyl-containing vessels.

Some manufacturing processes may be enclosed to keep airborne diacetyl, 2,3-pentanedione, and other priority flavoring compounds contained and separated from employees by:

- Isolating mixing and other high-exposure processes from the rest of the workplace
- Maintaining the isolated work areas under negative air pressure
- Ensuring that employees take special precautions and if necessary use appropriate PPE on entry into production work areas where diacetyl, 2,3-pentanedione, and other flavoring compounds are handled

When production processes that utilize flavorings or flavoring compounds are not enclosed or contained, employees performing other work tasks in the vicinity should be informed and required to use appropriate PPE to prevent incidental exposures.

8.3.3 Hygiene Procedures

Good personal hygiene is important to limit not only inhalation exposures to diacetyl, 2,3-pentanedione, and other flavoring compounds, but also exposure from ingestion and dermal absorption. Important hygiene considerations include:

- Employers should not allow employees to smoke, eat, or drink in work areas where diacetyl, 2,3-pentanedione, and other flavoring compounds are used.
- Employers should provide appropriate PPE to protect the employees from dermal exposure during normal work activities. Examples include gloves, chemical resistant arm sleeves, and aprons.
- Employees should wash their hands and exposed skin before eating, drinking, or smoking.

8.3.4 Reduced Process Temperatures for Priority Flavoring Compounds

To minimize volatilization, the temperature of diacetyl, 2,3-pentanedione, and other flavoring compounds in heated tanks should be maintained as low as production processes will allow, even when closed systems are used. Employers should make sure that:

- All temperature-related equipment such as thermometers and automatic shut-off mechanisms are regularly checked to ensure that they are in good working order.
- Tank thermometers and thermostats are calibrated at least monthly or as recommended by the manufacturer.
- Employees take periodic manual temperature readings with a stem thermometer inserted just below the surface of the heated agents or with an infrared thermometer.

8.3.5 Cleaning Practices for Equipment and Tools

Where possible, cold water should be used to clean out tanks and blenders to reduce the volatilization of chemicals into plant air. Employees

who are involved in cleaning or are working nearby should use appropriate PPE including respiratory protection, eye, and skin protection.

8.3.6 Limit Access to Priority Flavoring Compounds

Employers should structure work tasks to minimize the amount of time employees spend near priority chemicals and production processes that involve these chemicals. Employers should limit access to areas where diacetyl, 2,3-pentanedione, or other flavoring compounds are used to only those employees who are essential to the process or operation. These areas should be clearly marked with signage.

8.3.7 Informing Employees about the Hazard

8.3.7.1 Safety and health programs

Employers should establish a comprehensive safety and health program for all employees who are performing any activity, such as manufacturing, using, handling, or disposing of diacetyl or 2,3-pentanedione, that involves exposure to these compounds or mixtures that include these compounds. This program should include training on workplace hazards, monitoring of airborne diacetyl and 2,3-pentanedione levels, and medical surveillance of employees exposed to these compounds or mixtures that include these compounds. All containers of food flavorings fall under the labeling requirements of the OSHA hazard communication standard (HCS) unless they are covered under the Federal Food, Drug and Cosmetic Act or the Virus-Serum-Toxin Act of 1913 [29 CFR 1910.1200 (b)(5)].

Employee training should include information outlined in the OSHA HCS in the section titled "Employee Information and Training" [29 CFR 1910.1200 (h)(3)]. This includes information about diacetyl and 2,3-pentanedione and mixtures containing these compounds to which employees are exposed, explanation of safety data sheets and label elements, appropriate routine and emergency handling procedures, and recognition of the adverse health effects of exposure to these compounds, as well as other training requirements outlined in the OSHA HCS.

OSHA revised the HCS to align with the United Nations Globally Harmonized System of Classification and Labeling of Chemicals (GHS) in March 2012. This revision provides detailed criteria for hazard classification as well as new label elements (pictograms, signal words, hazard statements, and precautionary statements) and establishes a standardized safety data sheet (SDS) format. An SDS (formerly known as a material safety data sheet or MSDS) is a form that communicates the dangers of hazardous chemicals and mixtures and guidance for safe use. As of June 1, 2015, OSHA will require that SDSs adhere to a uniform format and include 16 sections that require specific information for the chemical or mixture listed on the SDS. More information on SDSs can be found on the OSHA HCS website at https://www.osha.gov/dsg/hazcom/index.html. Employers should be aware of the changes, requirements, phase-in dates, and compliance effective dates of the revised HCS standard. OSHA has provided additional information on the phase-in requirements and dates for the transition to the revised HCS on their website at http://www.osha.gov/dsg/hazcom/index.html.

8.3.7.2 GHS classifications of diacetyl and 2,3-pentanedione

NIOSH has provided the following classification and labeling recommendations for diacetyl (Table 8-3) and 2,3-pentanedione (Table 8-4) according to the hazard classification and labeling elements outlined in the OSHA hazard communication standard [29 CFR 1910.1200]. These classifications are based on the health hazard criteria presented in Appendix A, and

Table 8-3. Hazard classifications of diacetyl

Health hazards*					
GHS endpoint	**Hazard category**	**Rationale [reference]**	**Pictogram**	**Hazard phrase**	**Signal word†**
Acute toxicity	Category 2, inhalation	Estimated 4 hr LC50 is 441 ppm based on 6 hr exposure of 294.6 ppm in rats. Further explanation of this adjustment is provided in section 8.3.7.2.1 [Hubbs et al. 2008]		Fatal if inhaled	Danger
Serious eye damage/ eye irritation	Category 1, serious eye damage	0.1 ml of diacetyl in rabbits produced severe eye irritation with non-reversible effects after 21 days [Sugai et al. 1990]		Causes serious eye damage	Danger
Skin sensitization	Category 1B, skin sensitizer	EC3 values ranged from 11.3%–17.9% in mice via local lymph node assay [Anderson et al. 2011; Anderson et al. 2013; Roberts et al. 1999]		May cause an allergic skin reaction	Warning
Specific target organ toxicity-single exposure‡	Category 1	Epithelial necrosis and inflammation in the trachea and larynx in rats at 224 ppm [Hubbs et al. 2008]		Causes damage to the respiratory system if inhaled	Danger
Specific target organ toxicity- repeated exposure‡	Category 1	Peribronchial lymphocytic infiltrates in mice at 25 ppm [Morgan et al. 2008; National Toxicology Program 2011]. Several case studies, public health investigations, and a cohort mortality follow-up study link exposure to flavorings containing diacetyl to fixed airway obstruction [Akpinar-Elci et al. 2004; Cavalcanti et al. 2012; CDC 2002, 2007, 2013; Halldin et al. 2013].		Causes damage to respiratory system through prolonged or repeated exposure if inhaled	Danger

See footnotes at end of table.

(Continued)

Table 8-3 (Continued). Hazard classifications of diacetyl

Health hazards*					
GHS endpoint	**Hazard category**	**Rationale [reference]**	**Pictogram**	**Hazard phrase**	**Signal word†**
Physical hazards*					
Flammable liquid	Category 2	6°C [IPCS 2009]; 7°C [Sigma Aldrich 2010]		Highly flammable liquid and vapor	Danger

*Precautionary statements for the health and physical hazard classifications presented can be found in Appendix C of the hazard communication standard [29 CFR 1910.1200].

†Appendix C of the hazard communication standard [29 CFR 1910.1200] provides several precedence rules regarding the application of pictograms and signal words as well as rules for combining or omitting hazard and precautionary statements. These precedence rules save space on the label and improve readability.

‡NIOSH recommends that these GHS classifications should appear on product labels and SDSs when found in mixtures below the specific cut-off values/concentration limits that are provided in the hazard communication standard [29 CFR 1910.1200]. See section 8.3.7.3 below for further information.

Table 8-4. Hazard classifications of 2,3-pentanedione

Health hazards*					
GHS endpoint	**Hazard category**	**Rationale [reference]**	**Pictogram**	**Hazard phrase**	**Signal word†**
Acute toxicity	Category 2, inhalation	Estimated 4 hr LC50 is 441 ppm based on 6 hr exposure of 294.6 ppm. Further explanation of this adjustment is provided in section 8.3.7.2.1 [Hubbs et al. 2012; Morgan et al. 2012]		Fatal if inhaled	Danger
Skin sensitization	Category 1B, skin sensitizer	EC3 value 15.4 % in mice via local lymph node assays		May cause an allergic skin reaction	Warning
Specific target organ toxicity-single exposure‡	Category 1	6-hour inhalation study in rats at 112 ppm caused necrotizing rhinitis. At 120 ppm exposure for 6 hrs, decreased airway activity to methacholine aerosol was observed. [Hubbs et al. 2012]. After 120, 240, and 320 ppm exposure for 6 hr, decreased airway activity to methacholine aerosol was observed [Zaccone et al. 2013].		Causes damage to the respiratory system if inhaled	Danger
Specific target organ toxicity-repeated exposure‡	Category 1	Inhalation exposure study (6 hours/day, 5 days/week, for 2 weeks) in rats caused damage to airway epithelium, potential disruption to underlying basement membrane, and statistically significant influx of neutrophils in BALF at 200 ppm. In mice, the same repeat dose exposure regimen caused nasal turbinate necrosis (100 ppm) and laryngeal lesions (50 ppm). [Morgan et al. 2012]		Causes damage to respiratory system through prolonged or repeated exposure if inhaled	Danger

See footnotes at end of table.

(Continued)

Table 8-4 (Continued). Hazard classifications of 2,3-pentanedione

Health hazards*					
GHS endpoint	**Hazard category**	**Rationale [reference]**	**Pictogram**	**Hazard phrase**	**Signal word†**
Physical hazards					
Flammable liquid	Category 2	[Chem Service Inc. 1988; Merck Chemicals International 2010]		Highly flammable liquid and vapor	Danger

*Precautionary statements for the health and physical hazard classifications presented can be found in Appendix C of the hazard communication standard [29 CFR 1910.1200].

*Precautionary statements for the health and physical hazard classifications presented can be found in Appendix C of the hazard communication standard [29 CFR 1910.1200].

†Appendix C of the hazard communication standard [29 CFR 1910.1200] provides several precedence rules regarding the application of pictograms and signal words as well as rules for combining or omitting hazard and precautionary statements. These precedence rules save space on the label and improve readability.

‡NIOSH recommends that these GHS classifications should appear on product labels and SDSs when found in mixtures below the specific cut-off values/concentration limits that are provided in the hazard communication standard [29 CFR 1910.1200]. See section 8.3.7.3 below for further information.

physical hazard criteria presented in Appendix B of the hazard communication standard [29 CFR 1910.1200]. These classifications are based on the data from employee investigations (Chapter 3) and from experimental toxicology studies (Chapter 4). OSHA has provided guidance on hazard communication for diacetyl and food flavorings that contain diacetyl [OSHA 2013] on the basis of the previous version of the HCS, but that guidance does not address some of the requirements in the revised HCS based on GHS.

8.3.7.2.1 Further justification of acute inhalation toxicity for diacetyl and 2,3-pentanedione

The GHS classification for acute inhalation toxicity, category 2 for diacetyl is based upon rat acute inhalation studies of diacetyl and 2,3-pentanedione [Hubbs et al. 2012; Hubbs et al. 2008]. In the diacetyl study, the histopathology changes seen in rats exposed for 6 hours to a time-weighted average of 294.6 to 365 ppm diacetyl would be predicted to cause death if the animals had been observed for a longer time period. In exposures conducted in this concentration range, the severity scores in the airway epithelium of trachea, larynx, and multiple sections of nose had an average score of 7.5 to 9.5 on a scale of 1 to 10 (with 10 being most severe). Damage to airway epithelium is the accepted underlying cause for obliterative bronchiolitis in man, which causes human morbidity and mortality [King 1989]. The importance of extrapulmonary airway injury in the rodents to human risk assessment is discussed in the toxicology section.

In the 2,3-pentanedione inhalation study in rats, clinical observations documented that no clinical signs were present immediately after the 6 hour inhalation exposures to 318 or 354 ppm but respiratory signs were present in more than half of the rats at 18 hours post-exposure, when the rats were sacrificed [Hubbs et al. 2012].

While both of these inhalation studies were not intended to produce lethality, contemporary laboratory animal studies frequently use early indicators of impending mortality rather than actual mortality for studies of lethality [Stokes 2002]. The presence of extensive respiratory epithelial damage in 100% of the rats at exposures of approximately 294.6 ppm or greater for 6 hours in both of these studies and time-dependent progressive respiratory clinical signs are considered a humane endpoint for use in place of mortality. In this case, expert scientific judgment needs to be used to determine the LC50 because of the humane considerations. Because all rats had high pathology scores after inhaling 294.6 ppm or higher, NIOSH concludes that the LC50 based on a 4-hour exposure would be 441 ppm (the 4-hr equivalent of 294.6 ppm) or less. After inhaling 100 to 120 ppm diacetyl for 6 hours, histopathology changes were limited to the first nasal section and single exposures at this concentration did not suggest potential acute lethality. Similarly, after inhaling 111 ppm 2,3-pentanedione for 6 hours, rats did not have clinical signs and significant histopathology changes were limited to the first two nasal sections. This equates to a GHS acute inhalation toxicity category 2 classification (>100 and <500 ppm) for both diacetyl and 2,3-pentanedione.

8.3.7.3 Classifying mixtures containing diacetyl and 2,3-pentanedione

The HCS indicates that mixtures that contain compounds that require classification and labeling can be evaluated under a set of bridging principles if no toxicological data are available for the mixture itself. These bridging principles can be applied when there is "sufficient data on both the individual ingredients and similarly tested mixtures to adequately characterize the hazards of the mixture" [29

CFR 1910.1200.A.0.5]. If these bridging principles cannot be applied, the HCS provides specific cut-off values/concentration limits that are specified for each health hazard class and category. Most of these specific cut-off values/concentration limits are either ≥0.1% or ≥1%, under which mixtures containing classified compounds should be labeled accordingly. However, a few endpoints have different specific cut-off value/concentration limits specified. For most of the chemical hazards for which NIOSH made classifications (Tables 8-3 and 8-4), the specific cut-off values/concentration limits specified by the HCS are ≥1%. Exceptions include the hazard category for "serious eye damage/eye irritation" (≥3%) and for "flammable liquids," for which the HCS does not have a cut-off value/concentration limit. If these mixtures contain classified compounds below the specified HCS cut-off values/concentration limits, classification and labeling of those mixtures are not usually required. However, the standard indicates that "while the adopted cut-off values/concentration limits adequately identify the hazard for most mixtures, there may be some that contain hazardous ingredients at lower concentrations than the specified cut-off values/concentration limits that still pose an identifiable hazard [29 CFR 1910.1200.A.0.4.3.1]. As explained below, this is an important consideration for mixtures containing diacetyl and 2,3-pentanedione.

Cal/OSHA provided industrial hygiene monitoring results from a Flavor Industry Safety and Health Evaluation Program evaluation in 2006 and 2007 at a food flavoring manufacturer for the production of vanilla dry blend product [Widess 2013]. In this evaluation, a task-based personal breathing zone sample concentration of diacetyl collected over 19 minutes ranged from 3.5 to 5 ppm during dispensing of dry powder containing 0.14% diacetyl by weight. If a TWA exposure was calculated over an 8-hour work shift, assuming no other diacetyl exposure during the work shift, the 8-hour TWA exposure would have been 0.2 ppm, which exceeds the NIOSH 8-hour TWA REL (0.005 ppm). The exposure in the Flavor Industry Safety and Health Evaluation Program evaluation also exceeds the NIOSH STEL for diacetyl (0.025 ppm). In a NIOSH evaluation at a wholesale flavors and colors manufacturer, a task sample was collected when an employee was packaging dairy based flavoring into small containers over 33 minutes. Diacetyl comprised less than 1% of the total dairy flavored powder formulation. If a TWA exposure was calculated over an 8-hour work shift, assuming no other diacetyl exposure, the 8-hour TWA exposure would have been 0.33 ppm, which also exceeds the NIOSH 8-hour TWA REL [NIOSH 2008a]. Additionally, a laboratory-based study also identified emissions of diacetyl from natural butter and butter flavor powders, pastes, and liquid products in a laboratory environment [Rigler and Longo 2010]. Determinations show that even in the butter flavoring containing the lowest amount of diacetyl in the bulk flavoring (1.01% by weight), heating this flavoring to 37.5°C released vapor concentrations of diacetyl as high as 13.67 ppm. This suggests that even if diacetyl is present in bulk concentrations of <1%, vapor concentrations of diacetyl could greatly exceed the NIOSH REL and STEL. NIOSH does not have data to confirm this same relationship between concentrations in bulk mixture and air for 2,3-pentanedione. Although the vapor pressure of 2,3-pentanedione (21.4 mm Hg at 20°C) is lower than diacetyl (52.2 mm Hg at 20°C) and will not volatilize as readily as diacetyl at room temperature, the initial boiling point of 2,3-pentanedione (108°C) suggests that it is still a volatile organic compound [EPA 2013] that can readily enter the vapor phase upon heating, leading to employee exposures.

The data presented in this criteria document strongly suggest that diacetyl and

2,3-pentanedione are toxic to the respiratory system at very low vapor concentrations. For this reason, NIOSH recommends that flavoring mixtures that contain diacetyl or 2,3-pentanedione should be provided on product labels and SDSs at concentrations below the default GHS mixture cutoff points. Specifically, NIOSH recommends labeling at concentrations that under the anticipated conditions of use could generate vapors exceeding the NIOSH REL and/or STEL. In these cases the labels and SDSs should carry the pictogram, hazard phrase, signal word, and precautionary statements for the *specific target organ toxicity-single exposure* and *specific target organ toxicity-repeated exposure* endpoints. If specific cut-off values can be established otherwise, this recommendation does not need to be followed.

Regarding the nonrespiratory endpoints under which diacetyl and 2,3-pentanedione have been classified by NIOSH (Tables 8-3 and 8-4), NIOSH does not have any data to suggest that mixtures containing these compounds in concentrations less than the specific cutoff values/concentration limits specified by the HCS are hazardous. This includes the *acute toxicity, skin corrosion/irritation, serious eye damage/eye irritation, skin sensitization, and flammable liquid* endpoints for diacetyl, and *acute toxicity and flammable liquid* endpoints for 2,3-pentanedione. NIOSH recommends that manufacturers carefully evaluate whether mixtures containing these compounds below the cut-off values/concentration limits specified in the HCS should be labeled.

The Flavor and Extract Manufacturers Association has recommended that several flavoring substances, including diacetyl and 2,3-pentanedione, should include the following label warning if they are present in compounded flavors (including liquid and dry or powdered mixtures) in any concentration if they will be heated during processing [FEMA 2012]:

WARNING – This flavor may pose an inhalation hazard if improperly handled. Please contact your workplace safety officer before opening and handling, and read the MSDS. Handling of this flavor that results in inhalation of fumes, especially if the flavor is heated, may cause severe adverse health effects.

FEMA has also recommended that this same warning should be used for containers of neat substances such as diacetyl and 2,3-pentanedione as well as other "high priority" substances listed in the FEMA guidance document. Additionally, FEMA has recommended that all containers of compounded flavors (liquid and dry or powdered) or natural flavoring complexes that contain diacetyl, 2,3-pentanedione or other flavoring substances in concentrations of >1.0% should be labeled with the above warning [FEMA 2012]. It is of note that the use of the word "warning" in the FEMA text is inconsistent with the specific criteria for its use and application as a signal word in the HCS. NIOSH recommends removal of the word "warning" when using the FEMA text (see section 8.3.7.4 for details)

8.3.7.4 Labeling and posting

To communicate hazard information effectively to employees, employers should:

- Post appropriate labeling on all flavoring product containers according to the HCS requirements [29 CFR 1910.1200]. In this document, NIOSH is providing the recommended label elements, including signal word, hazard statements, and pictograms, that should be included for labeling of diacetyl and 2,3-pentanedione on SDSs and labels for shipping containers [see Tables 8-3 and 8-4]. The

precautionary statements that are also required can be found in Appendix C to the HCS [29 CFR 1910.1200]. NIOSH also recommends that mixtures containing diacetyl or 2,3-pentanedione at any concentration that could generate vapors that could exceed the NIOSH REL and/or STEL carry the pictogram, hazard phrase, and signal word for the *specific target organ toxicity-single exposure* and *specific target organ toxicity-repeated exposure* classifications until it can be demonstrated that mixtures containing these compounds in concentrations less than the specific cut-off values/concentration limits specified by HCS are not harmful.

- Place the following warning, as recommended by FEMA [FEMA 2012], on containers of compounded flavors that contain diacetyl, 2,3-pentanedione, or other flavoring substances identified in Table 1 of the FEMA document, in any concentration if the flavors are to be heated: *This flavor may pose an inhalation hazard if improperly handled. Please contact your workplace safety officer before opening and handling, and read the MSDS. Handling of this flavor that results in inhalation of fumes, especially if the flavor is heated, may cause severe adverse health effects.* Note: While NIOSH agrees with the content of the italicized text above, the word "warning," which appears in the FEMA guidance document, was not included because it is inconsistent with the specific criteria for its use and application as a signal word in the HCS. NIOSH recommends that the word "warning" should not be included on hazard statements containing diacetyl or 2,3-pentanedione, as this word has specific meaning and conflicts with standardized HCS signal word terminology.
- Post warning labels and signs describing the health risks associated with flavoring compound exposures at entrances to work areas and inside work areas where diacetyl, 2,3-pentanedione, or other flavoring compounds are used.
- Post warning labels and signs describing any needs for PPE in the work area.
- Post the statement "Wear Respiratory Protection in this Area" if respiratory protection is required.
- Print all labels and warning signs in English and in the predominant language of employees who do not read English.
- Verbally inform employees about the hazards and instructions printed on the labels and signs if they are unable to read them.
- Follow the requirements of the HCS for classifying and labeling diacetyl, 2,3-pentanedione, and other flavoring compounds. NIOSH recommends that development of SDSs and labels should occur as soon as possible given the importance of warning users about exposures of diacetyl and 2,3-pentanedione above the REL and or STEL. The OSHA website has additional information on the hazard communication standard at http://www.osha.gov/dsg/hazcom/index.html.

8.3.7.5 Training

Employees should receive training as mandated by the HCS [29 CFR 1910.1200]. As part of the training, employers should also:

- Inform all potentially exposed employees, including temporary and contract employees, about diacetyl or 2,3-pentanedione-associated health risks such as acute toxicity, skin irritation and sensitization, eye irritation or damage, respiratory disease, and flammability hazards.

- Train employees to report to management any eye or skin problems that may be associated with exposure to flavoring compounds and any persistent or worsening respiratory symptoms such as cough, shortness of breath, or wheezing.
- Train employees to recognize hazardous situations.
- Inform employees about practices or operations that may generate airborne diacetyl or 2,3-pentanedione concentrations above the REL and or STEL (e.g., mixing).
- Establish procedures for reporting hazards and giving feedback about actions taken to correct them.
- Train employees in the proper use and maintenance of implemented engineering controls to protect them from hazardous exposures.
- Train employees in the proper use and maintenance of PPE.
- Inform employees about other flavoring compounds that may pose occupational exposure hazards.

8.4 Respiratory Protection

Respirators should not be used as the primary means of controlling employee exposures to inhalation hazards for routine operations. Whenever possible, engineering and work practice control techniques discussed above should be used. Respirators may be needed and can be used during the implementation of engineering controls and work practices, during some short-duration maintenance procedures, and during emergencies. Respirators should be used for exposure situations when engineering controls cannot reduce exposures to concentrations below the REL.

Employers need to monitor work processes to accurately determine exposure levels of airborne chemicals. Respiratory protection should be provided when that assessment indicates exposures may exceed the NIOSH REL of 5 ppb TWA or 25 ppb STEL for diacetyl; when exposures may exceed the NIOSH REL of 9.3 ppb TWA or 31 ppb STEL for 2,3-pentanedione; when occupational exposure limits of other chemicals may be exceeded; or when exposures of concern to diacetyl substitutes without OELs occur. When respiratory protection is used, employers need to establish a written respiratory protection program that meets the requirements of the OSHA respiratory protection standard 29 CFR 1910.134. The program should be administered by a suitably trained program administrator and updated to reflect changes in workplace conditions that affect respirator use [29 CFR 1910.134].

A respiratory protection program should include the following elements:

- Procedures for selecting respirators for use in the workplace.
- Medical evaluations of employees required to use respirators.
- Fit testing procedures for tight-fitting respirators.
- Procedures for proper use of respirators in routine and reasonably foreseeable emergency situations.
- Procedures and schedules for cleaning, disinfecting, storing, inspecting, repairing, discarding, and otherwise maintaining respirators.
- Procedures to ensure adequate air quality, quantity, and flow of breathing air for atmosphere-supplying respirators
- Training for employees in the respiratory hazards to which they are potentially exposed during routine and emergency situations.
- Training for employees in the proper use of respirators, including putting on and

removing them, any limitations on their use, and their maintenance.

- Procedures for regularly evaluating the effectiveness of the program.

If an air-purifying respirator with cartridge/canister for the protection against gases and vapors does not have an end-of-service-life indicator, then the employer is required to implement a cartridge/canister change schedule based on objective information that will ensure that the cartridges/canisters are changed before the end of their service life, according to the OSHA respiratory protection standard which was revised in 1998. The revised OSHA respiratory protection standard removed the previous method of determining the end of a cartridge's service life by using warning properties such as odor and irritation. A cartridge's useful service life is how long it provides adequate protection from the harmful chemicals in the air which are identified in the respirator approval. A change schedule to establish the time period for replacing respirator cartridges and canisters is the part of the written respirator program that is used to determine how often cartridges should be replaced. Data and information relied upon to establish the schedule should be included in the respirator program. The use of warning properties such as odor and irritation cannot be used as the sole basis for determining change schedules. However, respirator users should be trained to understand that they should leave the area if abnormal odor or irritation is experienced. The respirator should be checked to see if the odor or irritation is evidence that respirator cartridges need to be replaced or the respirator facepiece needs adjustment for better face seal fit.

The following table indicates which types of respirators are recommended for use against diacetyl and 2,3-pentanedione and the maximum use concentrations for diacetyl and 2,3-pentanedione, calculated using the OSHA-assigned protection factors for each type of respirator listed [29 CFR 1910.134 (d)(3)(i)(A)]. For escape, use a gas mask with a full facepiece and OV-P100 canisters or self-contained breathing apparatus. All of the air-purifying respirators listed in Table 8-5 are equipped with combination organic vapor/P100 or organic vapor/high efficiency filter cartridges, which are capable of protecting wearers against both vapor and particulate hazards.

All respirators selected for use should be approved by NIOSH under the provisions of 42 CFR Part 84, as required by OSHA regulations. The current listing of NIOSH certified respirators can be found in the *NIOSH Certified Equipment List*, which is available on the NIOSH website [NIOSH 2010].

Selection of a specific respirator within a given class of recommended respirators depends on the particular situation; this choice should be made only by qualified personnel. There is no formal certification requirement for a respiratory protection program manager. Employee activity and employee location in a hazardous environment need to be considered in respirator selection, as well as the time period of use, and the type of respirator application, such as for routine, nonroutine, emergency or rescue use.

Additional information on the selection and use of respirators can be found in the *NIOSH Respirator Selection Logic* [NIOSH 2004].

8.5 Dermal, Eye, and Face Protection

Diacetyl can cause skin and eye irritation. Chemical resistant gloves or sleeves or other appropriate protection for exposed skin should be used when handling liquid, paste, or powdered flavoring compounds containing diacetyl that could cause dermal injury

Table 8-5. OSHA assigned protection factors and maximum use concentrations of respirators for diacetyl and 2,3-pentanedione

Type of respirator	OSHA assigned protection factor	Maximum use concentration for diacetyl*	Maximum use concentration for 2,3-pentanedione*
Full facepiece air purifying, w/OV-P100 cartridge(s) or canister(s)	50	0.25 ppm (250 ppb)	0.46 ppm (460 ppb)
PAPR, full facepiece w/OV-HE cartridge(s) or canister(s)	1,000	5 ppm (5,000 ppb)	9.3 ppm (9,300 ppb)
PAPR, hood or helmet w/OV-HE cartridge(s) or canister(s)	25/1,000†	0.12/5 ppm (120/5,000 ppb)	0.23/9.3 ppm (230/9,300 ppb)
PAPR, loose fitting facepiece w/OV-HE cartridge(s) or canister(s)	25	0.12 ppm (120 ppb)	0.23 ppm (230 ppb)
SAR, continuous flow mode or pressure- demand mode or other positive- pressure mode, full facepiece	1,000	5 ppm (5,000 ppb)	9.3 ppm (9,300 ppb)
SAR, hood or helmet	25/1,000†	0.12/5 ppm (120/5,000 ppb)	0.23/9.3 ppm (230/9,300 ppb)
SAR, loose fitting facepiece	25	0.12 ppm (120 ppb)	0.23 ppm (230 ppb)
SCBA, pressure-demand or other positive-pressure mode (e.g. open/closed circuit), full facepiece or hood/helmet	10,000	50 ppm	93 ppm

PAPR = Powered air-purifying respirator

SAR = Supplied air respirator

OV-HE = Organic vapor-high efficiency particulate

SCBA = Self-contained breathing apparatus

*Maximum use concentrations will be lower than shown when those concentrations are equal to or exceed immediately dangerous to life and health levels.

†The employer should have evidence provided by the respirator manufacturer that testing of these respirators demonstrates performance at a level of protection of 1,000 or greater to receive an assigned protection factor (APF) of 1,000. Absent such evidence, these respirators receive an APF of 25.

[29 CFR 1910.138]. It is important to select the most appropriate chemical resistant glove for the application and to determine how long it can be worn, and whether it can be reused. Procedures should be implemented to ensure that the gloves are replaced before breakthrough occurs. NIOSH recommends that before purchasing gloves or other protective clothing, the employer should refer to the SDS from the manufacturer of the diacetyl and 2,3-pentanedione being used, and /or request documentation from the glove or protective clothing manufacturer that the gloves meet the appropriate test standard(s) for the hazard(s) anticipated, and to request any glove and protective clothing breakthrough time data against diacetyl and 2,3-pentanedione that may be available from these sources. Tight-fitting

chemical goggles, used in conjunction with a face shield or other appropriate eye and face protection should also be used.

Eye and face protection should be provided when there is a hazard from flying particles, molten metal, liquid chemicals, acids or caustic liquids, chemical gases or vapors, or potentially injurious light radiation. OSHA regulations at 29 CFR 1910.133 contain the specific requirements. Protective eye and face devices purchased after July 5, 1994, should comply with ANSI Z87.1-1989, "American National Standard Practice for Occupational and Educational Eye and Face Protection," which is incorporated by reference in the OSHA regulations [29 CFR 1910.133]. The ANSI standard was revised in 2010 [ANSI 2010]. The current edition also includes respirators that cover the eyes and face as approvable under the standard.

Goggles for chemical splash should be used for eye protection for employees with potential exposures to diacetyl, 2,3-pentanedione, or food flavorings containing these compounds who are not also required to wear a respirator with a full facepiece, hood, or helmet. Face shields can also be used in conjunction with goggles to shield the wearer's face, or portions thereof, in addition to the eyes for protection from liquid splash. Face shields should be worn only in conjunction with spectacles and goggles, as required by ANSI Z87.1-2010 [ANSI 2010]. A face shield with a polyethylene terephthalate visor should provide good chemical resistance against diacetyl, 2,3-pentanedione, or food flavorings containing these compounds.

Gloves and protective clothing such as aprons made from butyl rubber, Teflon™, or Tychem™ are effective in reducing skin contact with ketones to prevent skin irritation [OSHA 2013]. Diacetyl and 2,3-pentanedione are diketones and certain food flavorings containing either may contain other ketones or diketones. Glove suppliers should be contacted to ensure that appropriate glove materials are selected for the specific chemicals involved [OSHA 2002].

An analysis should be performed on each operation involving diacetyl, 2,3-pentanedione, or other food flavoring compounds to assess the potential exposures and to establish specific guidance about when to use skin, eye, and face protection.

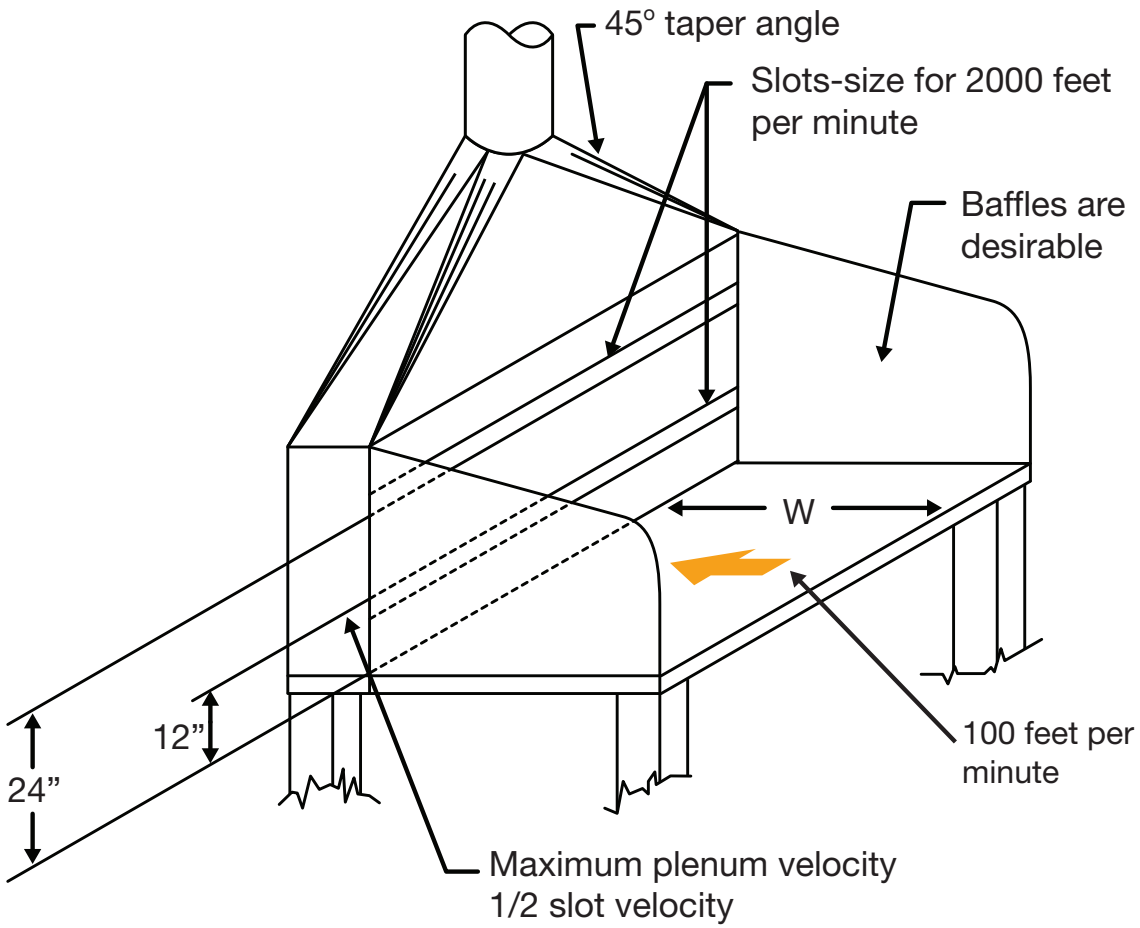

Figure 8-1. Welding ventilation bench hood*

*VS-90-01, From ACGIH, Industrial Ventilation: A Manual of Recommended Practice for Design, 26th Edition. Copyright 2009. Reprinted with permission

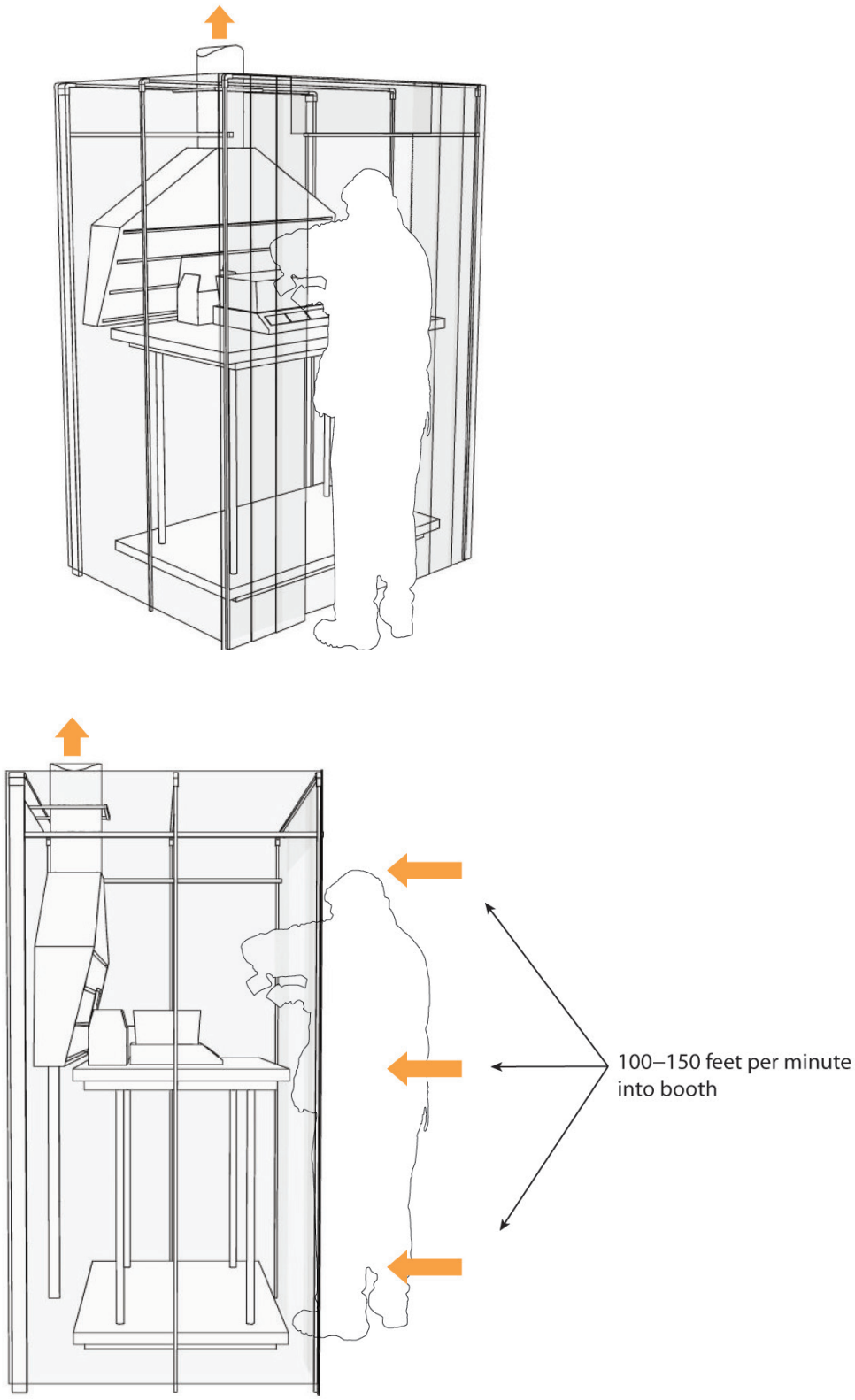

Figure 8-2. Ventilated small batch mixing workstation

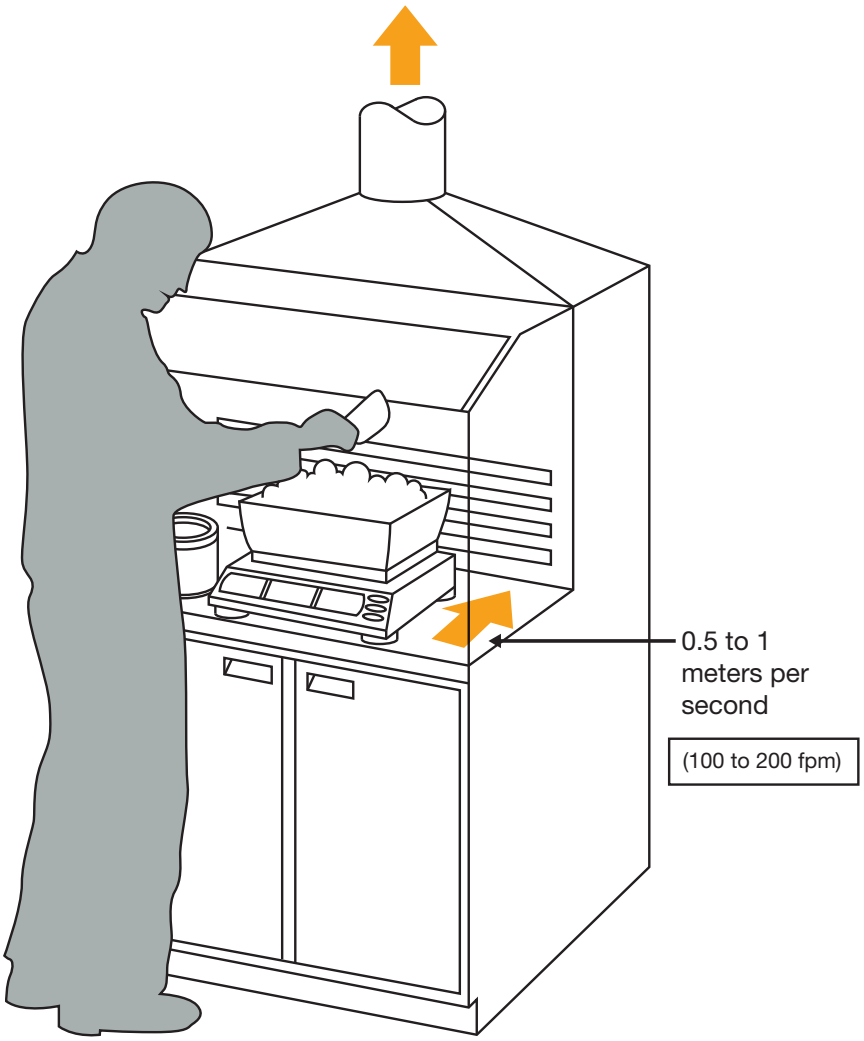

Figure 8-3. Benchtop ventilation for weighing and handling powders 0.5 to 1 m/s = 100 to 200 fpm*

*Contains public sector information published by the Health and Safety Executive and licensed under the Open Government License v1.0.

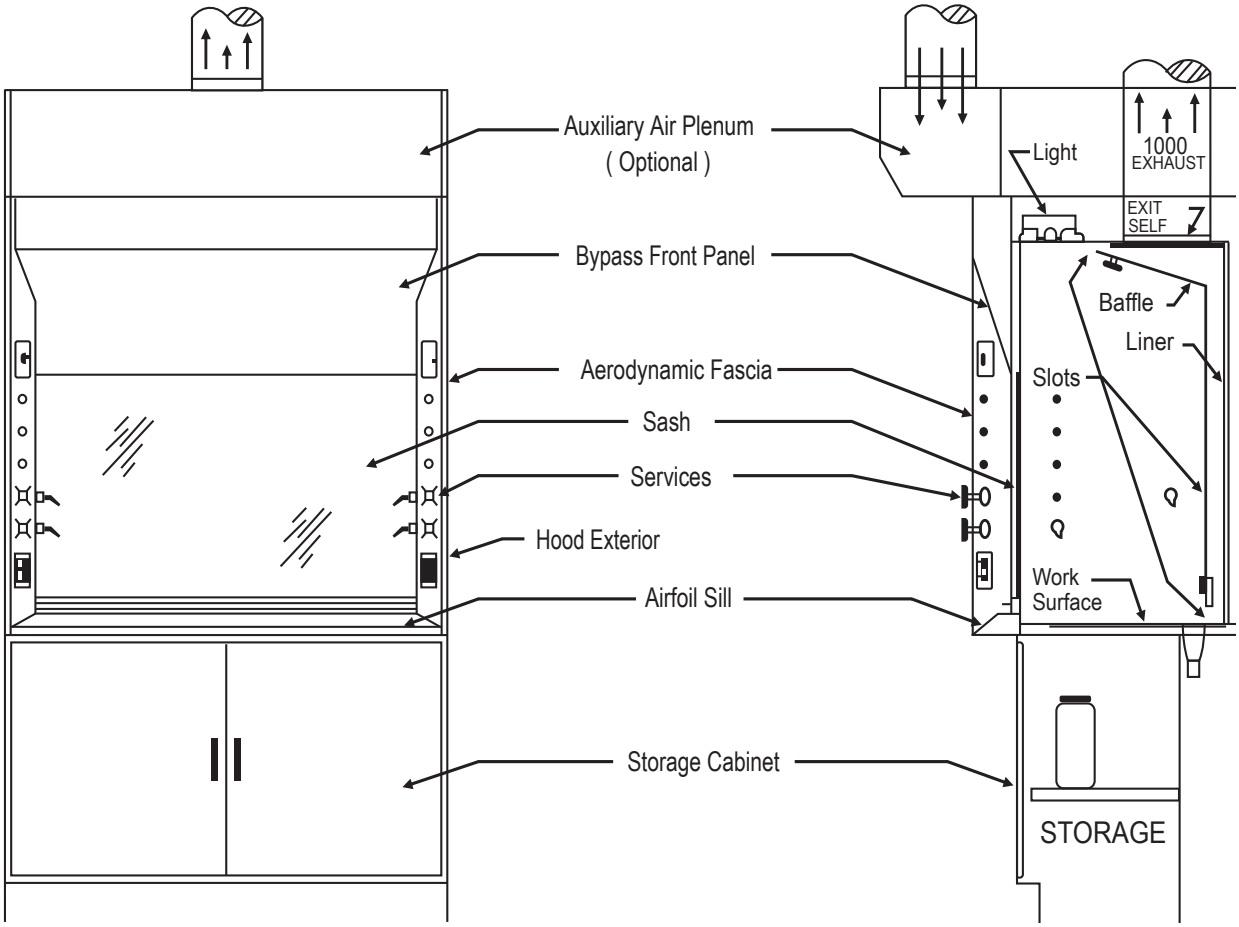

Figure 8-4. Schematic of a laboratory chemical fume hood*

*Reprinted from SEFA 1-2002, Laboratory Fume Hoods: Recommended Practices[SEFA 2002].

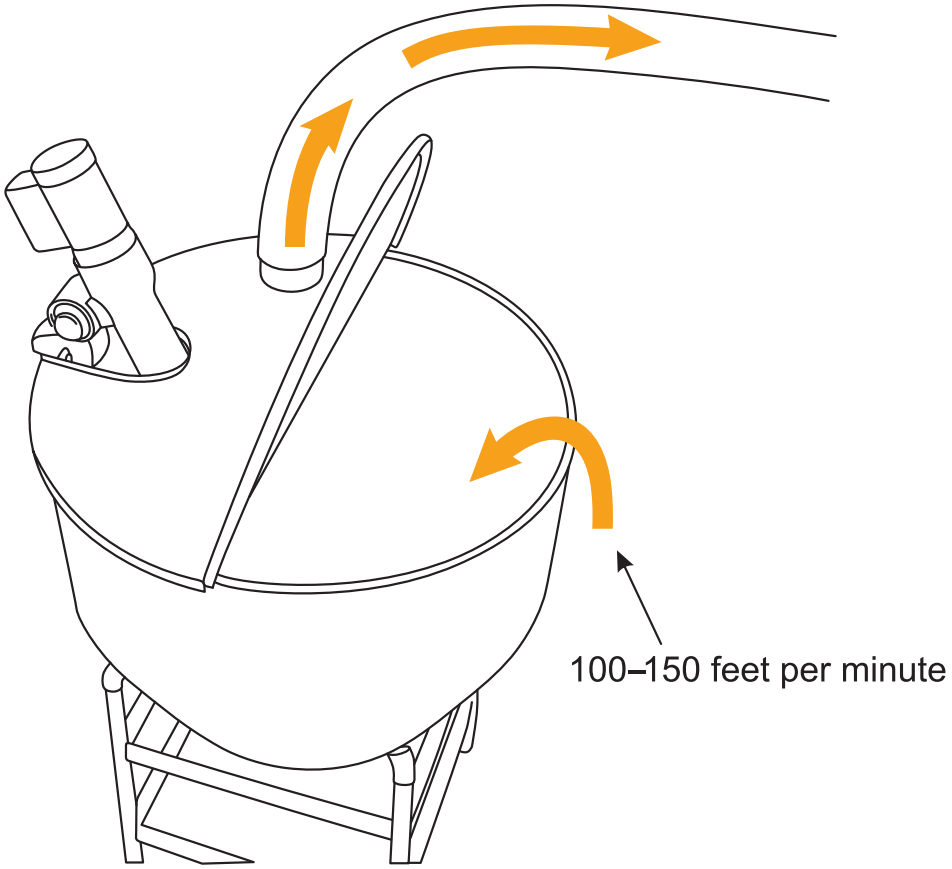

Figure 8-5. Mixing vessel with a ventilated hinged tank lid

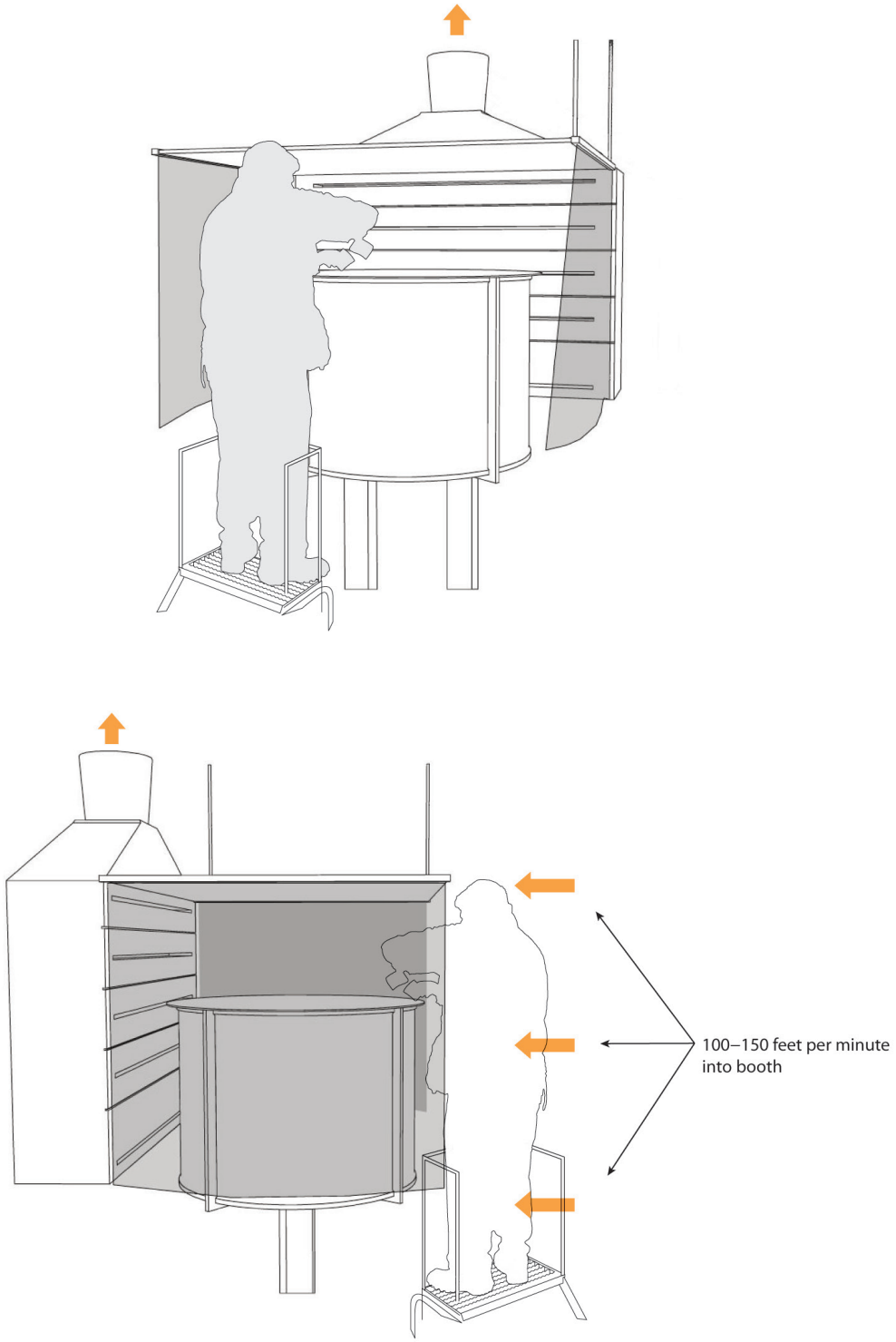

Figure 8-6. Ventilated booth for large batch mixing

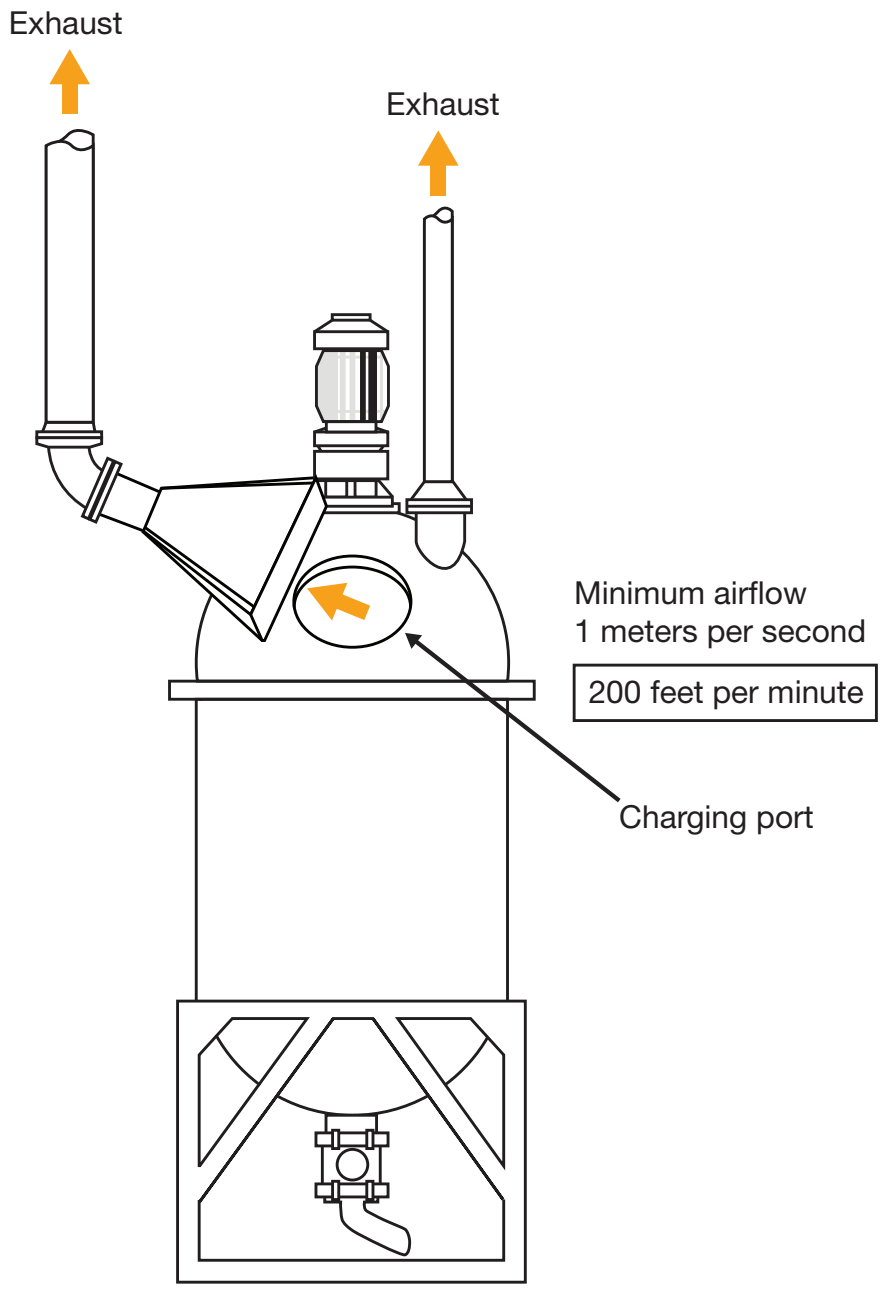

Figure 8-7. Charging reactors and mixers from a sack or keg*, 1 m/s = 200 fpm

*Contains public sector information published by the Health and Safety Executive and licensed under the Open Government License v1.0.

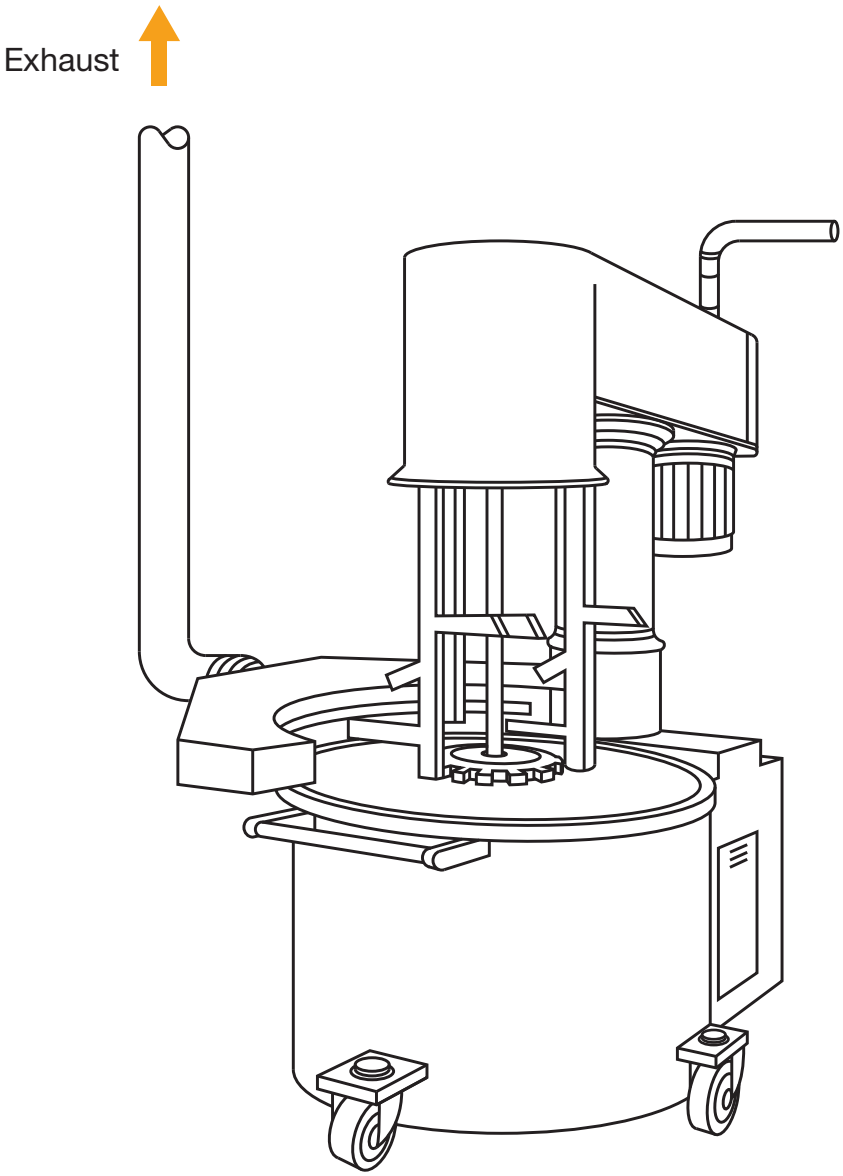

Figure 8-8. Annular exhaust for capturing dusts/vapors from mixers

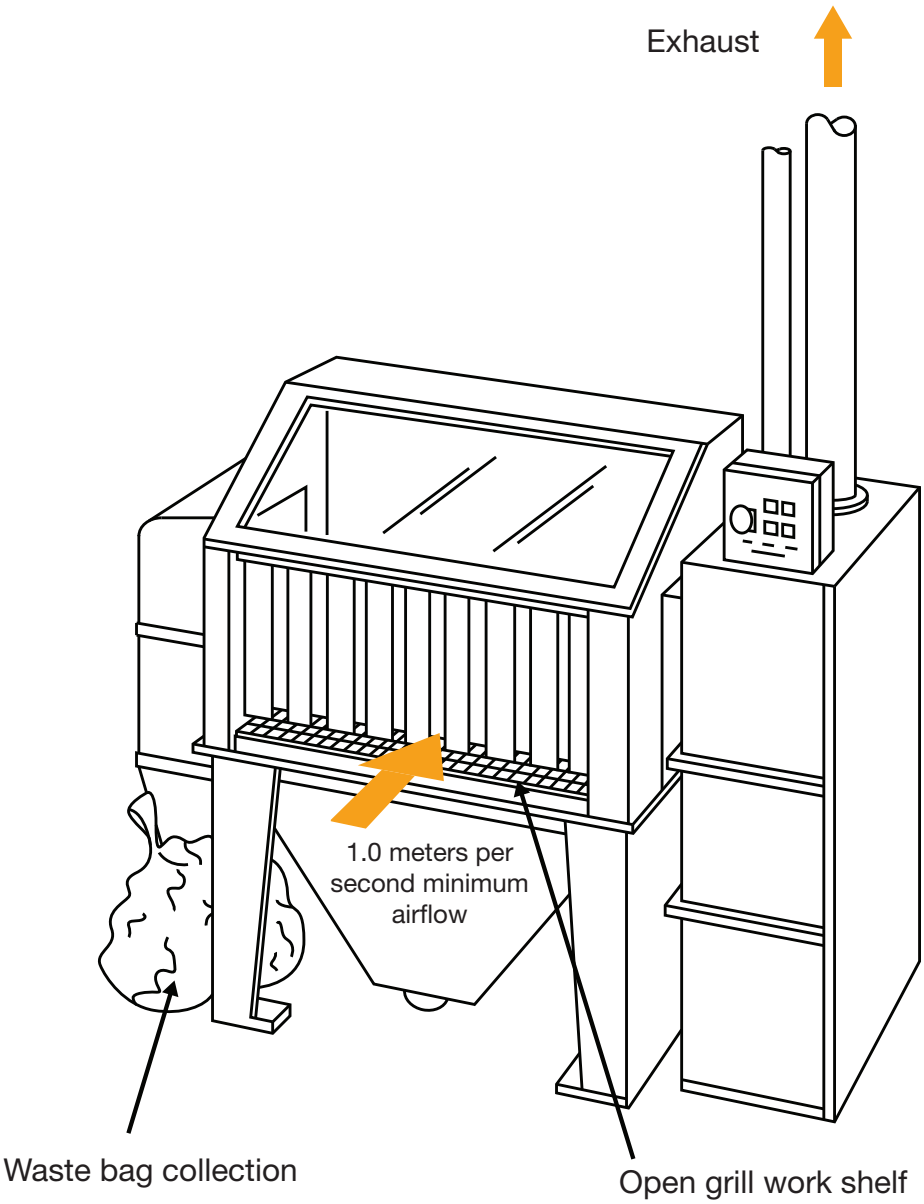

Figure 8-9. Ventilated bag dumping/emptying station*
1.0 m/s = 200 fpm

*Contains public sector information published by the Health and Safety Executive and licensed under the Open Government License v1.0.

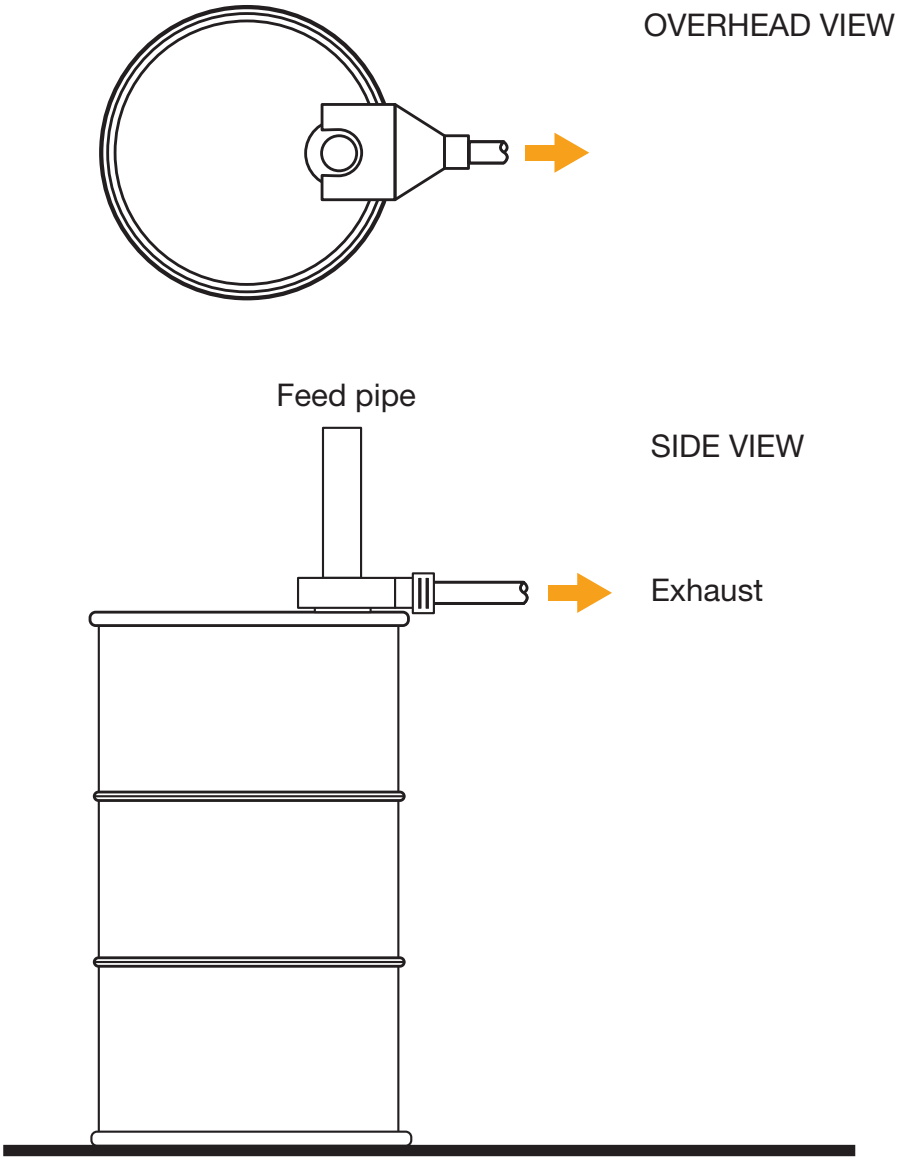

Figure 8-10. Annular exhaust for capturing vapors during drum filling*

*Contains public sector information published by the Health and Safety Executive and licensed under the Open Government License v1.0

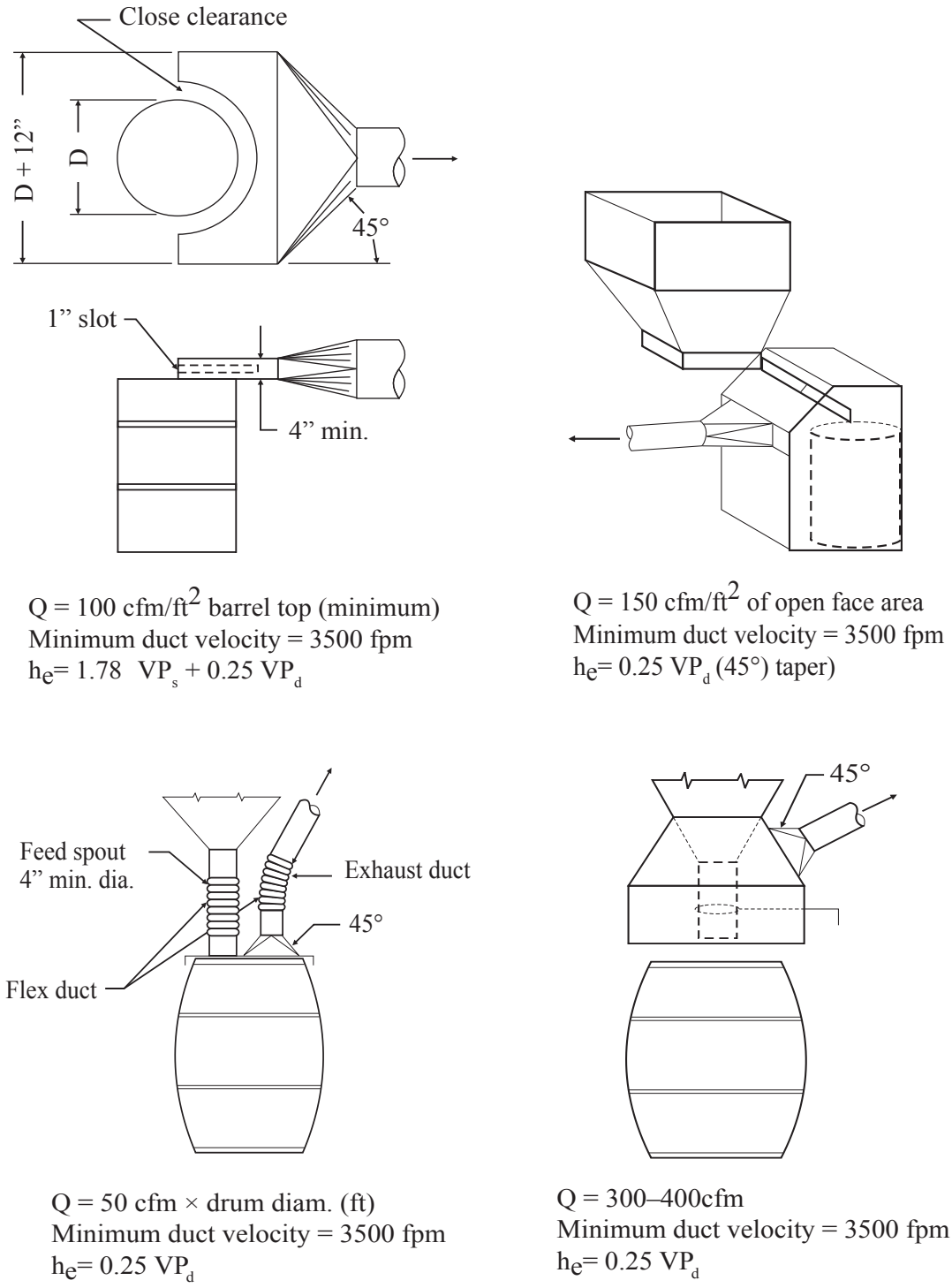

Figure 8-11. Ventilation design options for capturing vapors during drum filling*

*VS-15-01, From ACGIH, *Industrial Ventilation: A Manual of Recommended Practice for Design*, 26th Edition. Copyright 2009. Reprinted with permission.

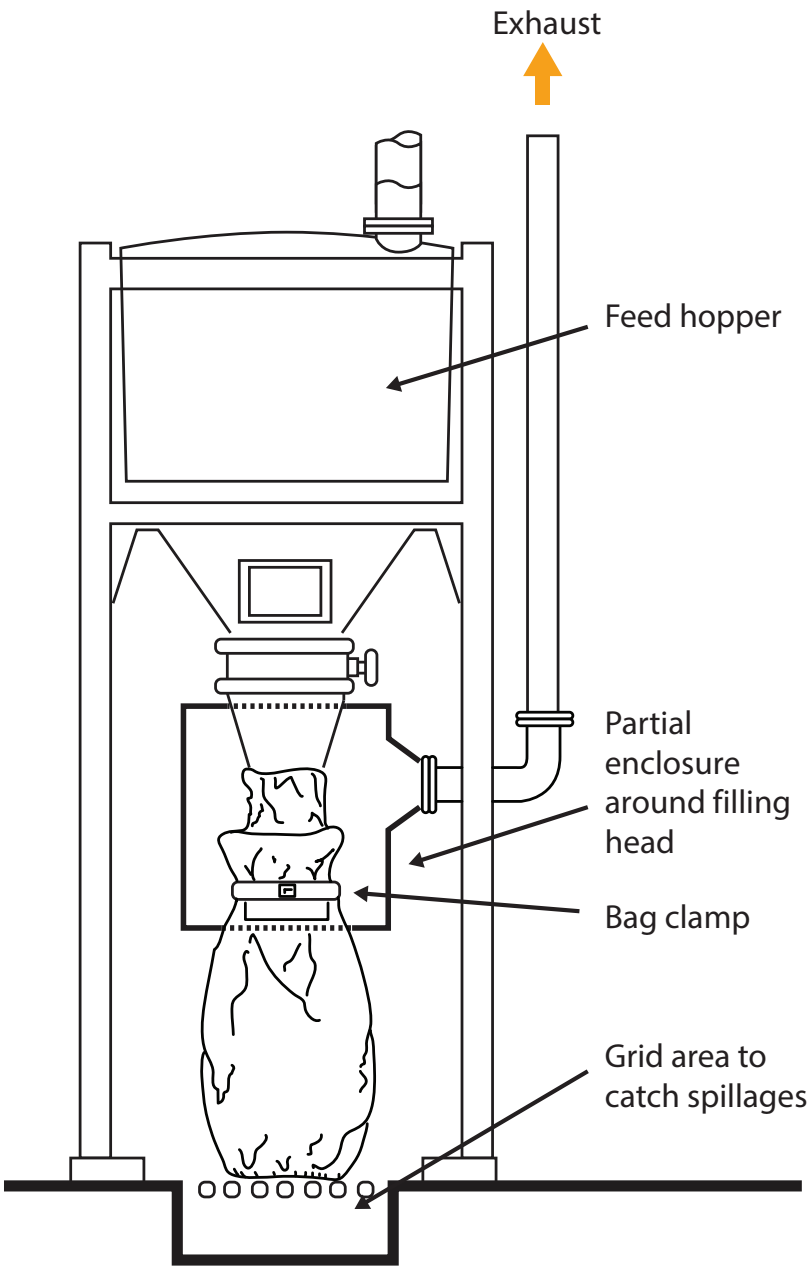

Figure 8-12. Ventilation for bag filling*

*Contains public sector information published by the Health and Safety Executive and licensed under the Open Government License v1.0.

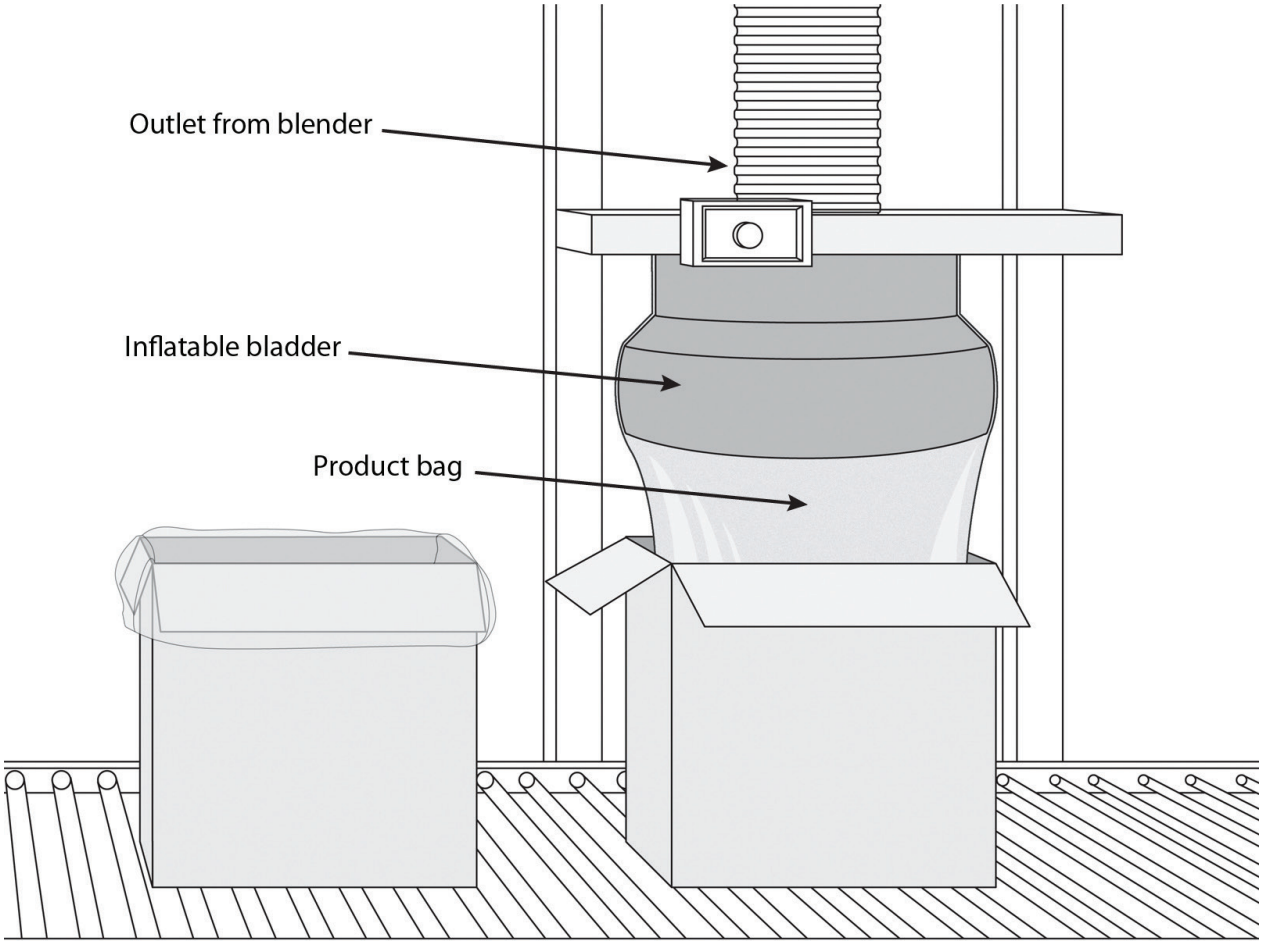

Figure 8-13. Dust control during bag filling operation

References

29 CFR 1910.133. Eye and face protection. Code of Federal Regulations. Washington, DC: U.S. Government Printing Office, Office of the Federal Register.

29 CFR 1910.134. Respiratory protection. Code of Federal Regulations. Washington, DC: U.S. Government Printing Office, Office of the Federal Register.

29 CFR 1910.134 (d)(3)(i)(A). Respiratory protection (assigned protection factors). Code of Federal Regulations. Washington, DC: U.S. Government Printing Office, Office of the Federal Register.

29 CFR 1910.138. Hand protection. Code of Federal Regulations. Washington, DC: U.S. Government Printing Office, Office of the Federal Register.

29 CFR 1910.1200. Hazard communication. Code of Federal Regulations. Washington, DC: U.S. Government Printing Office, Office of the Federal Register.

29 CFR 1910.1200 (b)(5). Hazard communication (labeling exemptions). Code of Federal Regulations. Washington, DC: U.S. Government Printing Office, Office of the Federal Register.

29 CFR 1910.1200 (h)(3). Toxic and hazardous substances (training). Code of Federal Regulations. Washington, DC: U.S. Government Printing Office, Office of the Federal Register.

29 CFR 1910.1200.A.0.4.3.1. Considerations for the classification of mixtures. Code of Federal Regulations. Washington, DC: U.S. Government Printing Office, Office of the Federal Register.

29 CFR 1910.1200.A.0.5. Bridging principles for the classification of mixtures where test data are not available for the complete mixture. Code of Federal Regulations. Washington, DC: U.S. Government Printing Office, Office of the Federal Register.

ACGIH (American Conference of Governmental Industrial Hygienists) [2007]. Industrial ventilation: a manual of recommended practice for operation and maintenance. Cincinnati, OH: American Conference of Governmental Industrial Hygienists.

ACGIH (American Conference of Governmental Industrial Hygienists) [2013]. Industrial ventilation: a manual of recommended practice. 28th ed. Cincinnati, OH: American Conference of Governmental Industrial Hygienists.

Akpinar-Elci M, Travis WD, Lynch DA, Kreiss K [2004]. Bronchiolitis obliterans syndrome in popcorn production plant workers. Eur Respir J *24*(2):298–302.

Alleman T, Darcey DJ [2002]. Case report: bronchiolitis obliterans organizing pneumonia in a spice process technician. J Occup Environ Med *44*(3):215–216.

Anderson SE, Franko J, Lukomska E, Meade B [2011]. Evaluation of the hypersensitivity potential of alternative butter flavorings: are they safe alternatives for diacetyl? [abstract]. Toxicologist *120*(2):520.

Anderson SE, Franko J, Wells JR, Lukomska E, Meade BJ [2013]. Evaluation of the hypersensitivity potential of alternative butter flavorings. Food Chem Toxicol *62C*:373–381.

ANSI (American National Standards Institute) [2010]. American national standard: occupational and educational personal eye and face protection devices. New York: American National Standards Institute, Inc, ANSI Z87.1–2010.

ANSI/AIHA [2003]. American National Standard for Laboratory Ventilation. Fairfax, VA: American Industrial Hygiene Association Publication No. ANSI Z9.5–2002.

Boylstein R, Piacitelli C, Grote A, Kanwal R, Kullman G, Kreiss K [2006]. Diacetyl emissions and airborne dust from butter flavorings used in microwave popcorn production. J Occup Environ Hyg *3*(10):530–535.

Burgess WA, Ellenbecker MJ, Treitman RD [2004]. Ventilation for control of the work environment. Hoboken, NJ: Wiley-Interscience.

Cavalcanti ZD, Albuquerque Filho AP, Pereira CA, Coletta EN [2012]. Bronchiolitis associated with exposure to artificial butter flavoring in workers at a cookie factory in Brazil. Jornal Brasileiro DePneumologia *38*(3):395–399.

CDC (Centers for Disease Control and Prevention) [2002]. Fixed obstructive lung disease in workers at a microwave popcorn factory—Missouri, 2000–2002. MMWR *51*(16):345–347.

CDC (Centers for Disease Control and Prevention) [2007]. Fixed obstructive lung disease among workers in the flavor-manufacturing industry—California, 2004–2007. MMWR *56*(16):389–393.

CDC [2013]. Obliterative bronchiolitis in workers in a coffee-processing facility—Texas, 2008-2012. MMWR *62*(16):305–307.

Cecala AB, Volkwein JC, Daniel JH [1988]. Reducing bag operator's dust exposure in mineral processing plants. Appl Ind Hyg *3*(1):23–27.

Chem Service Inc. [1988]. Material safety data sheet, 2,3-pentanedione, O-818.

Dunn KH, Garcia A, Echt A [2008]. Engineering case reports: evaluation of a local exhaust ventilation system for controlling exposures during liquid flavoring production. J Occup Environ Hyg *5*(11):D103–110.

Eastern Research Group, Inc. [2008a]. Site visits related to diacetyl and flavorings that contain diacetyl: food production facility B—a commercial bakery. OSHA Docket No. 2008–0046–0069. By Eastern Research Group, Inc. Lexington, MA.

Eastern Research Group, Inc. [2008b]. Technological and economic feasibility analysis for proposed OSHA standard for diacetyl and acetoin. Draft final report. By Eastern Research Group Inc. Lexington, MA.

Elms J, Beckett P, Griffin P, Evans P, Sams C, Roff M, Curran AD [2003]. Job categories and their effect on exposure to fungal alpha-amylase and inhalable dust in the UK baking industry. AIHA J *64*(4):467–471.

EPA (Environmental Protection Agency) [2013]. Volatile organic compounds: technical overview. http://www.epa.gov/iaq/voc2.html. Date accessed: June 2013.

FEMA (The Flavor and Extract Manufacturers Association of the United States) [2012]. Respiratory health and safety in the flavor manufacturing workplace. http://www.femaflavor.org/sites/default/files/linked_files/FEMA_2012%20Respiratory%20Health%20and%20Safety.pdf. Date accessed: September 2012.

Goodfellow HD, Tähti E [2001]. Industrial ventilation design guidebook. San Diego, CA: Academic.

Halldin CN, Suarthana E, Fedan KB, Lo YC, Turabelidze G, Kreiss K [2013]. Increased respiratory disease mortality at a microwave popcorn production facility with worker risk of bronchiolitis obliterans. Plos One *8*(2).

Health and Safety Executive [2003a]. Charging reactors and mixers from a sack or keg. In: COSHH essentials: easy steps to control chemicals. London: Health and Safety Executive.

Health and Safety Executive [2003b]. Drum emptying using a drum pump. In: COSHH essentials: easy steps to control chemicals. London: Health and Safety Executive.

Health and Safety Executive [2003c]. Drum filling. In: COSHH essentials: easy steps to control chemicals. London: Health and Safety Executive.

Health and Safety Executive [2003d]. IBC filling and emptying. In: COSHH essentials: easy steps to control chemicals. London: Health and Safety Executive.

Health and Safety Executive [2003e]. Mixing liquids with other liquids or solids. In: COSHH essentials: easy steps to control chemicals. London: Health and Safety Executive.

Health and Safety Executive [2003f]. Mixing solids with other solids or liquids. In: COSHH essentials: easy steps to control chemicals. London: Health and Safety Executive.

Health and Safety Executive [2003g]. Sack emptying. In: COSHH essentials: easy steps to control chemicals. London: Health and Safety Executive.

Health and Safety Executive [2003h]. Sack filling. In: COSHH essentials: easy steps to control chemicals. London: Health and Safety Executive.

Health and Safety Executive [2003i]. Weighing and handling flour improvers, etc. (craft bakery). In: COSHH essentials: easy steps to control chemicals. London: Health and Safety Executive.

Heitbrink WA, McKinnery WN, Jr. [1986]. Dust control during bag opening, emptying and disposal. Appl Ind Hyg *1*(2):101–109.

Hirst DV, Dunn KH, Shulman SA, Hammond DR, Sestito N [2014]. Evaluation of engineering controls for the mixing of flavorings containing diacetyl and other volatile ingredients. J Occup Environ Hyg *11*(10):680–687.

Hirst N, Ryder M, Brocklebank M [2002]. Containment systems: a design guide. Rugby, Warwickshire, UK: Gulf Professional Publishing.

Hubbs AF, Cumpston AM, Goldsmith WT, Battelli LA, Kashon ML, Jackson MC, Frazer DG, Fedan JS, Goravanahally MP, Castranova V, Kreiss K, Willard PA, Friend S, Schwegler-Berry D, Fluharty KL, Sriram K [2012]. Respiratory and olfactory cytotoxicity of inhaled 2,3-pentanedione in Sprague-Dawley rats. Am J Pathol *181*(3):829–844.

Hubbs AF, Goldsmith WT, Kashon ML, Frazer D, Mercer RR, Battelli LA, Kullman GJ, Schwegler-Berry D, Friend S, Castranova V [2008]. Respiratory toxicologic pathology of inhaled diacetyl in Sprague-Dawley rats. Toxicol Pathol *36*(2):330–344.

IPCS (International Programme on Chemical Safety) [2009]. International Chemical Safety Card, 2,3-Butanedione. http://www.inchem.org/documents/icsc/icsc/eics1168.htm. Date accessed: March 2014.

Kanwal R, Kullman G, Fedan K, Kreiss K [2011]. Occupational lung disease risk and exposures to butter flavoring chemicals after implementation of controls at a microwave popcorn plant. Public Health Rep *126*:480–494.

Kanwal R, Kullman G, Piacitelli C, Boylstein R, Sahakian N, Martin S, Fedan K, Kreiss K [2006]. Evaluation of flavorings-related lung disease risk at six microwave popcorn plants. J Occup Environ Med *48*(2):149–157.

King TE, Jr. [1989]. Bronchiolitis obliterans. Lung *167*(2):69–93.

Merck Chemicals International [2010]. 2,3-Pentanedione. http://www.merck-chemicals.com/2-3-pentanedione/MDA_CHEM-818555/p_HMKb.s1LnGcAAAEWhuE-fVhTl. Date accessed: December 2010.

Morgan DL, Flake GP, Kirby PJ, Palmer SM [2008]. Respiratory toxicity of diacetyl in C57BL/6 mice. Toxicol Sci *103*(1):169–180.

Morgan DL, Jokinen MP, Price HC, Gwinn WM, Palmer SM, Flake GP [2012]. Bronchial and bronchiolar fibrosis in rats exposed to 2,3-pentanedione vapors: implications for bronchiolitis obliterans in humans. Toxicol Pathol *40*(3):448–465.

National Toxicology Program [2011]. Short-term bioassay data for 2,3-butanedione (diacetyl). http://tools.niehs.nih.gov/ntp_tox/index.cfm?fuseaction=shortermbioassaydata.datasearch&chemical_name=2%2C3%2DButanedione%20%28Diacetyl%29&cas_no=431-03-8&study_no=C20725&study_length=90%20Days&protocol_no=2072502. Date accessed: 7/25/2011.

Naumann BD, Sargent EV, Starkman BS, Fraser WJ, Becker GT, Kirk GD [1996]. Performance-based exposure control limits for pharmaceutical active ingredients. AIHA J *57*(1):33–42.

NFPA (National Fire Protection Association) [2007]. NFPA 77: Recommended Practice on Static Electricity. Quincy, MA: National Fire Protection Association. NFPA 77.

NIOSH [2004]. NIOSH Respirator Selection Logic. By Bollinger N. Cincinnati, OH: U.S. Department of Health and Human Services, Centers for Disease Control and Prevention, National Institute for Occupational Safety and Health, DHHS (NIOSH) Publication No. 2005–100.

NIOSH [2007]. Hazard evaluation and technical assistance report: Carmi Flavor and Fragrance Company, Inc., Commerce, CA. By Kanwal R, Kullman G. Cincinnati, OH: U.S. Department of Health and Human Services, Centers for Disease Control and Prevention, National Institute for Occupational Safety and Health, NIOSH HETA Report No. 2006–0303–3043.

NIOSH [2008a]. Evaluating occupational exposures and work practices at Agilex Flavors, Inc. formerly Key Essentials, Inc., Rancho Santa Margarita, CA. A technical assistance report to the California/Occupational Safety and Health Administration. By McKernan L, Dunn K. Cincinnati, OH: U.S. Department of Health and Human Services, Centers for Disease Control and Prevention, National Institute for Occupational Safety and Health, NIOSH HETA Report No. 2006–0361–2.

NIOSH [2008b]. Hazard evaluation and technical assistance report: Gold Coast Ingredients, Inc., Commerce, CA. By Bailey R, McKernan L, Dunn K, Sahakian N, Kreiss K. Cincinnati, OH: U.S. Department of Health and Human Services, Centers for Disease Control and Prevention, National Institute for Occupational Safety and Health, NIOSH HETA Report No. 2007–0033–3074.

NIOSH [2008c]. In-depth survey report: evaluation of engineering controls for the mixing of flavoring chemicals: Gold Coast Ingredients, Inc., Commerce, CA. By Dunn K, Echt A, Garcia A. Cincinnati, OH: U.S. Department of Health and Human Services, Centers for Disease Control and Prevention, National Institute for

Occupational Safety and Health, NIOSH EPHB Report No. 322–11a.

NIOSH [2008d]. In-depth survey report: evaluation of engineering controls for the production of liquid and powder flavoring chemicals. Kerry Ingredients and Flavours, Inc., formerly Mastertaste, Inc., Commerce, CA. By Dunn K, Echt A, Couch J, Myers D. Cincinnati, OH: U.S. Department of Health and Human Services, Centers for Disease Control and Prevention, National Institute for Occupational Safety and Health, NIOSH EPHB Report No. 322–12a.

NIOSH [2009]. Hazard evaluation and technical assistance report: Chr. Hansen, Inc., New Berlin, WI. By Sahakian N, Kullman G, Dunn K, Kanwal R. Cincinnati, OH: U.S. Department of Health and Human Services, Centers for Disease Control and Prevention, National Institute for Occupational Safety and Health, NIOSH HETA Report No. 2007–0327–3083.

NIOSH [2010]. Certified Equipment List. http://www.cdc.gov/niosh/npptl/topics/respirators/cel. Date accessed: July 2010.

NIOSH [2015]. Best practices: engineering controls, work practices and exposure monitoring for occupational exposures to diacetyl and 2,3-pentanedione. By Dunn KH, McKernan LT, Garcia A. Cincinnati, OH: U.S. Department of Health and Human Services, Centers for Disease Control and Prevention, National Institute for Occupational Safety and Health, DHHS (NIOSH) Publication 2015–197.

OSHA (Occupational Safety and Health Administration) [2002]. Recommended preventative and control measures to reduce the risk of obstructive lung disease among workers in the microwave popcorn packaging industry. http://www.osha.gov/SLTC/flavoringlung/preventativecontrolmeasures_regionvii.html. Date accessed: August 2010.

OSHA [2013]. Hazard communication guidance for diacetyl and food flavorings containing diacetyl. http://www.osha.gov/dsg/guidance/diacetyl-guidance.html. Date accessed: July 2013.

Rigler MW, Longo WE [2010]. Emission of diacetyl (2,3 butanedione) from natural butter, microwave popcorn butter flavor powder, paste, and liquid products. Int J Occup Environ Health *16*(3):291–302.

Roberts DW, York M, Basketter DA [1999]. Structure-activity relationships in the murine local lymph node assay for skin sensitization: alpha,beta-diketones. Contact Dermatitis *41*(1):14–17.

SEFA [2002]. Laboratory Fume Hoods: Recommended Practices (SEFA 1-2002).

Sigma Aldrich [2010]. Material safety data sheet, No. B85037, 2,3- butanedione. http://www.sigmaaldrich.com/MSDS/MSDS/DisplayMSDSPage.do?country=US&language=en&productNumber=D3634&brand=SIGMA&PageToGoToURL=http%3A%2F%2Fwww.sigmaaldrich.com%2Fcatalog%2Fproduct%2Fsigma%2Fd3634%3Flang%3Den. Date accessed: December 2009.

Stokes WS [2002]. Humane endpoints for laboratory animals used in regulatory testing. ILAR J *43 Suppl*(Review):S31–38.

Sugai S, Murata K, Kitagaki T, Tomita I [1990]. Studies on eye irritation caused by chemicals in rabbits—1. A quantitative structure-activity relationships approach to primary eye irritation of chemicals in rabbits. J Toxicol Sci *15*(4):245–262.

Widess E [2013]. Memorandum of January 11, 2013, from E. Widess, State of California, Department of Industrial Relations, Division of Occupational Safety and Health, to L. Taylor McKernan, Education and Information Division, National Institute for Occupational Safety and Health, Centers for Disease Control and Prevention, U.S. Department of Health and Human Services

Zaccone EJ, Thompson JA, Ponnoth DS, Cumpston AM, Goldsmith WT, Jackson MC, Kashon ML, Frazer DG, Hubbs AF, Shimko MJ, Fedan JS [2013]. Popcorn flavoring effects on reactivity of rat airways in vivo and in vitro. Journal of Toxicology and Environmental Health, Part A *76*:669-689.