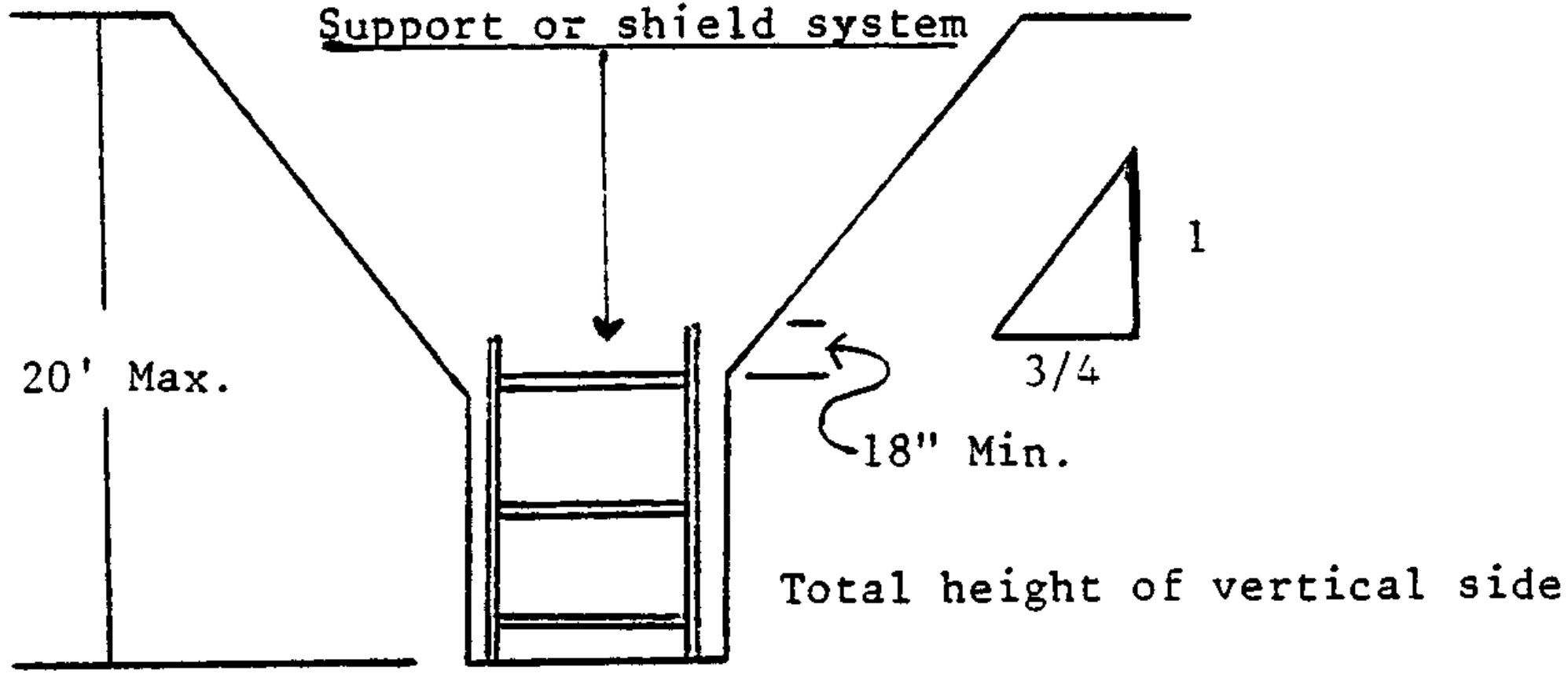
Support or shield system
1
3/4
20' Max.
18" Min.
Total height of vertical side