Public Comments and Responses for Recirculation Systems and Filtration Module Code and Annex after the First 60-day Review Period

Informational Copy: NOT Open for Public Comment

(1) Clement Rivera, Treatment Specialties (Ramsey, New Jersey)

1) *Comment:*
4.7.3.2.2.2 -- Current dosing parameters are not enough to maintain MINIMUM SANITATION STANDARDS in SWIMMING POOLS. -- All CHLORINE dosing and generating equipment including erosion feeders shall be sized to provide the following minimum dosage:
   i. 7.6ppm per hour dosage for a given size pool
   ii. Calculate as follows: - For Sodium hypochlorite…GPD (Gallons Per day)(Sodium Hypochlorite) = ((10.7 x (Pool Gallons /10,000) x 7.6) / 128) x 24
   iii. For Cal Hypo – replace 10.7 with 2, and 128 with 16.
   iv. For Gas Chlorine/Salt Generation – Replace 10.7 with 1.3, and 128 with 16.

   REFERENCE: HCF SPECIFICATION (Attached) – by Link Automation.http://treatmentspecialties.net/uploads/3/0/2/7/3027453/hcf_spec.pdf

   Changes to Module/Annex:
   Partially agree. Code and annex revised.

2) *Comment:*
4.7.3.2.2.2.1 -- -- Current dosing parameters are not enough to maintain MINIMUM SANITATION STANDARDS in SWIMMING POOLS. -- Feed equipment serving high use facilities such as water parks and high use health club facilities shall be sized to provide the following minimum dosage:
   i. 7.6 ppm per hour for a given pool
   ii. Calculate as follows: - For Sodium hypochlorite…GPD (Gallons Per day)(Sodium Hypochlorite) = ((10.7 x (Pool Gallons / 10,000) x 7.6) / 128) x 24
   iii. For Cal Hypo – replace 10.7 with 2, and 128 with 16.
   iv. For Gas Chlorine/Salt Generation – Replace 10.7 with 1.3, and 128 with 16.

   REFERENCE: HCF SPECIFICATION (Attached) – by Link Automation.http://treatmentspecialties.net/uploads/3/0/2/7/3027453/hcf_spec.pdf

   Changes to Module/Annex:
   Agree. Code revised.

3) *Comment:*
4.7.3.2.5 -- Standard controller programming is not enough to keep up with the needs of

a swimming pool -- Please see link for Recommended specification:
http://treatmentspecialties.net/uploads/3/0/2/7/3027453/hcf_spec.pdf

Changes to Module/Annex:
Commenter did not provide proposed change to code.

(2) Charles Kunsman, University of Akron (Akron, Ohio)

1) Comment:
5.7.5.2 -- Items 5.7.5.2; 5.7.5.4.2; and 5.7.5.5 are contradictory. In one place you are asking to drain the Spa weekly. Then you follow up with a calculation on determining when to drain. This is followed up with the statement that you drain and clean as necessary -- Delete and re-number or delete 5.7.5.4.2 and 5.7.5.5.

Changes to Module/Annex:
Agree. Code revised, consolidating and re- numbered.

(3) David Henke, JEO Consulting Group, Inc (Wahoo, Nebraska)

1) *Comment:*
4.7 -- Need recommendations on turnover rate for surf board pools. State of Nebraska does not have standards

Changes to Module/Annex:
Disagree. Surf boards pools would be covered under the definition for “Activity Pool” so no separate definition needed.

(4) Wayne Wade, Wade Associates, LLC (Harrisburg, Pennsylvania)

1) *Comment:*
4.7.1.4.4.1 -- Remove the requirement of 1Gallon per square foot of pool surface area. This is excessive for non-competitive use pools. Adds extreme cost to pools that are not high competitive use such as general recreational use. Balancing tanks for gutter pools is sufficient.

Changes to Module/Annex:
Partially agree. Code revised to clarify applicability and intent.

2) *Comment:*
4.7.1.5.1.6 -- Remove the 30 foot width requirement for the use of skimmers. Not

required for general recreational use pools. Adds extreme cost to general recreational use pools and many state codes allow the use of skimmers on any size pool.

Changes to Module/Annex:
Disagree. Many states currently limit the surface area. This requirement is based on the limits of the skimmer to effectively skim water from the surface layer from greater distances.

Additional Info from Wayne Wade:

I have a Aquatic Consulting firm that provides services to many municipalities, private clubs, etc. as well as YMCA's, high schools colleges, etc. The two (2) sections that I have commented on place unnecessary excessive costs on pools that are not built for just competitive use or as we classify them " General Recreational Use Pools". Many of these pools may incorporate competitive use areas but that is not the primary use of the pool. This is certainly the case during major renovations to existing pools that are then required to comply with current codes.

The surge capacity requirement either requires in-pool surge plus a tank or a large surge tank depending on the style of gutter. In pool surge requires maintaining a water level 1" lower than the lip of the gutter and incorporating surge weirs into the gutter design which in my opinion is a skimmer pool unless the pool is in use. A properly sized balancing tank will suffice for general recreational use pools when a gutter recirculation system is incorporated.

The skimmer requirement again adds excessive, unnecessary costs to a general recreational use pool since some form of gutter is required as well as the surge requirement. A properly designed skimmer pool will function well for general recreational use pools and is permitted by most State codes. Will existing skimmer pools have to comply with this section when undertaking renovations?

Please keep in mind when developing this Model Code that the majority of public pools are general recreational use pools and not just competitive use such as colleges, universities, etc. and are functioning on very limited budgets.

Thank you for the opportunity to submit my response.

Wayne Wade

(5) Thomas Kuechler, Occidental Chemical Corporation (Sauget, Illinois)

1) *Comment:*
ANNEX 4.7.2.3.3 -- The pore size and surface area of replacement cartridges ~~shall~~ should match the manufacturer's recommendations. -- The word "shall" is not appropriate for the Annex. The text in the Annex is informational, not enforceable.

Changes to Module/Annex:
Agree. Annex revised.

2) *Comment:*
4.7.3.1.1 -- DISINFECTION and PH control … outlined in MAHC Section 4.7.3.2.~~5.~~ -- Incorrect number.

Changes to Module/Annex:
Disagree. No change. This section is only for chemical introduction methods (not the equipment).

3) *Comment:*
4.7.3.2.2.2 -- All CHLORINE dosing and generating equipment including erosion feeders shall be sized to provide the following ~~minimum dosage~~ capacity: -- Change "minimum dosage" to "capacity", since this section is about sizing the feed system. The term "minimum dosage" could mislead pool operators into thinking these are the minimum feed rates allowed, which could lead to higher than desired FAC concentrations.

Changes to Module/Annex:
Agree. Code revised.

4) *Comment:*
4.7.3.2.2.2.1 -- Feed equipment serving high use facilities such as water parks and high use health club facilities shall be sized to provide the following ~~minimum dosage~~ capacity: -- Same as above.

Changes to Module/Annex:
Code revised, high-use requirements section deleted.

5) *Comment:*
4.7.3.2.2.2 -- 1) Outdoor POOLs (unstabilized): 1.25 lbs of FAC/day/~~FAC~~/10,000 gals. of POOL water; 2) Indoor POOLs: 1.0 lbs of FAC/day/~~FAC~~/10,000 gals. of POOL water; Outdoor POOLs (stabilized): 0.31 lbs of FAC/day/10,000 gals. of POOL water. -- Writing the units as "lbs of FAC/day" is clearer than "lbs/day/FAC".

Also see Notes 1 and 2 below:

Note 1:

The calculation method for the required feeder capacity proposed in the Annex is not substantiated by any reference and thus appears to be arbitrarily chosen. This calculation method is unusual since it uses the number of turnovers/day as a factor. In particular, the values of 2.5 ppm FAC per turnover (outdoor pools, unstabilized) and 2.0 ppm FAC per turnover (indoor pools) do not appear to be based on any published data, and thus are not justified. This calculation appears to assume that all of the free available chlorine (FAC) is destroyed, and must be replenished, during each pass through the filtration system. This is certainly not the case, even when a UV system is being used. In fact, the chlorine demand of a pool does not depend on the turnover rate.

Despite the unusual calculation method, the proposed capacities in the code appear to be reasonable. The specified capacity in 4.7.3.2.2.2 is equivalent to 15 ppm of FAC/day for unstabilized outdoor pools and 12 ppm of FAC/day for indoor pools. The specified capacity in 4.7.3.2.2.2.1 (High Use Facilities) is equivalent to 32.4 ppm of FAC/day for unstabilized outdoor pools and 15 ppm of FAC/day for indoor pools. For comparison, our 1999 field trial in Albany, New York, conducted in cooperation with the State of New York Department of Health, reported usage rates of 15-36 ppm of FAC/day for unstabilized outdoor pools.

For comparison, the New York State regulations for public swimming pools (see http://www.health.ny.gov/regulations/nycrr/title_10/part_6/subpart_6-1.htm) at §11.1.5 Capacity states: “Feeders shall be capable of supplying disinfectant to the pool in the range up to 10 mg/l chlorine or equivalent.” However, this regulation appears to specify an instantaneous feed rate rather than a daily feed rate. The NY regulation applies to unstabilized pools.

Note 2:

The feeder capacities in the draft code do not provide values for stabilized outdoor pools. The presence of stabilizer lowers the rate at which sunlight destroys FAC by a factor of 4-8. The suggested value for feeder capacity for stabilized pools is lower by a factor of 4 for normal use outdoor pools, where the primary contributor to chlorine demand is sunlight degradation. The suggested value is lower by a factor of 2 for the high use outdoor pools, where bather load also contributes to chlorine demand.

Changes to Module/Annex:
Agree. Code revised.

6) *Comment:*
4.7.3.2.2.2.1 CODE & ANNEX -- The Tables and sample calculations should be changed according to comment regarding 4.7.3.2.2.2 above. -- 1) Outdoor (unstabilized): 2.7 lbs of FAC/day~~/FAC~~ /10,000 gals. POOL water
Indoor: 1.25 lbs of FAC/day~~/FAC~~/10,000 gals. POOL water.
Outdoor POOLs (stabilized): 1.4 lbs of FAC/day/10,000 gals. of POOL water.

Changes to Module/Annex:
Agree. Code and annex revised.

7) Comment:
4.7.3.2.7.5 -- Proper ventilation shall be required for all CHLORINE gas systems. -- For clarity.

Changes to Module/Annex:
Disagree. Applies to carbon dioxide and ozone gas feed systems .

8) *Comment:*
5.7.3.2.7.5.2 -- ~~5.7.3.2.7.5.2~~4.7.3.2.7.3.2 Erosion feeders shall … feeder manufacturer. -- Incorrect number. This section follows 4.7.3.2.7.3.1.

Changes to Module/Annex:
Commenter cites section 5.7.3.2.7.5.2 however, there is no corresponding number in the code . Inconsistencies regarding numbering will be reconciled in full, “knitted” version of the MAHC. Numbering revised.

9) *Comment:*
5.7.5.3 -- ~~The backwash rate of sand filters shall be adjusted to match the temperature of the water used for backwashing.~~ -- This does not make sense. How can the backwash rate match a temperature? The backwash rate should be dictated by the need to backwash well.

Changes to Module/Annex:
Agreed. Section deleted.

10) *Comment:*
5.7.5.4, 5.7.5.4.1, & 5.7.5.4.2 -- ~~5.7.5.4 Water shall be replaced at the required interval as outlined in MAHC Section 5.7.5.5.2.~~

~~5.7.5.4.1~~5.7.5.2.1 Water replacement shall be performed either all at once or incrementally on a daily basis.

~~5.7.5.4.2~~5.7.5.2.2 The water replacement interval (in days) shall be calculated by dividing the SPA volume (in gallons) by 3 and then dividing by the average number of users per day. –

- Section 5.7.5.4 is redundant to section 5.7.5.2.
- Renumber 5.7.5.4.1 to 5.7.5.2.1.
- Renumber 5.7.5.4.2 to 5.7.5.2.2.

Changes to Module/Annex:
Agree. Code revised, consolidated, and re- numbered.

11) *Comment:*
4.7.3.2.7.1 ANNEX -- All UV units ~~shall~~ should be installed into the system by means of a bypass pipe to allow maintenance on the UV unit while the pool is in operation. -- The word “shall” is not appropriate for the Annex. The text in the Annex is informational, not enforceable.

Changes to Module/Annex:
Disagree. The corresponding code section (annex mis-numbered, should be 4.7.3.2.7.7.1) states "shall" , by changing annex to "should" as suggested can create confusion.

12) *Comment:*
4.7.3.2.8.5.1 & 4.7.3.2.8.6 -- The generator shall be capable of feeding a CHLORINE dosage equivalent to ~~four and one-half (4.5) pounds of available CHLORINE per day for each ten thousand (10,000) gallons of POOL capacity~~ the capacity specified in MAHC sections 4.7.3.2.2.2 and 4.7.3.2.2.2.1, or 100% of the total daily facility requirement, whichever is greater.

~~The generator(s) shall be capable of providing a CHLORINE dosage equivalent to 100% of the total daily facility requirement.~~ -- A generator should not be required to have a capacity different from other types of chlorine feeders.

The requirements in 4.7.3.2.8.5.1 and 4.7.3.2.8.6 are different requirements for the capacity of the generator. The proposed change combines these into one requirement.

Changes to Module/Annex:
Agree. Code revised.

(6) Pamela Scully, CT Department of Health (Hartford, Connecticut)

1) *Comment:*
4.7.1.3.2.1.2 – (**add)** If the width of the pool is greater than 50 feet than floor inlets shall be required. – REFERENCE: CT Public Swimming Pool Design Guide Section 6.7

Changes to Module/Annex:
Agree. Code revised.

2) *Comment:*
4.7.1.3.3.6 -- Dye testing shall be **conducted when deemed necessary** to evaluate the mixing characteristics…….Not all pools would need to be dye tested based on pervious known design flows

Changes to Module/Annex:
Agree. Code revised.

3) *Comment:*
4.7.1.4.2.1 -- ……upper surface at a rate of at least **100** percent of the approved…… -- REFERENCE: CT Public Swimming Pool Design Guide Section 9.2

Changes to Module/Annex:
Disagree. The intent of this section was to overdesign to prepare for future upgrades.

4) *Comment:*
4.7.1.4.3.1 -- …..to handle at least **100** percent of the approved…… -- REFERENCE: CT Public Swimming Pool Design Guide Section 9.3

Changes to Module/Annex:
Disagree. The intent of this section was to overdesign to prepare for future upgrades.

5) *Comment:*
4.7.1.4.4.4 -- Surge tanks shall have overflow pipes to convey excess water to waste via an air gap. -- Air gap is required on all drain/discharge piping

Changes to Module/Annex:
Not sure what change is being suggested.

6) *Comment:*
4.7.1.4.6.2 -- Makeup water shall be supplied through an air gap. – REFERENCE: CT Public Swimming Pool Design Guide Section 2.2

Changes to Module/Annex:
Disagree. Approved backflow prevention device is also acceptable.

7) *Comment:*
4.7.1.5.1.6 -- Pools using skimmer shall not exceed 30 feet (9.0 m) in width unless adequate circulation can be demonstrated. -- There are a few very large pools in CT that use skimmers that have not had circulation issues.

Changes to Module/Annex:
Disagree. See annex for additional explanation. The width restriction is to address the limitation/ability of skimmers to draw water from the surface layer over a distance. Circulation addresses water movement within the pool.

8) *Comment:*
4.7.1.5.1.6.1 -- Floatation tests should be performed **as needed** to ensure effective skimming and proper……. -- Not all pools really need to be tested, so why add the extra burden and cost to them

Changes to Module/Annex:
Agree. Code revised to differentiate between requirement for initial construction compliance/commissioning flotation test and operational aspect in Section 5.

9) *Comment:*
4.7.1.6.2.1 -- A minimum of two hydraulically balanced outlets are required in the bottom, **one of the outlets may be located on the bottom of a side/end wall**, at the deepest level. – REFERENCE: CT Public Swimming Pool Design Guide Section 6.2

Changes to Module/Annex:
Agree. Code revised.

10) *Comment:*
4.7.1.6.2.3 -- Outlets shall be located no less than **3 feet (.9 m) apart, measuring edge to edge of drain covers. --** Not sure why 6 feet is used here, and 3 feet edge to edge of cover allows for the piping in the sump to be 3 feet apart no matter what the sump's configuration and still meet the VGB – REFERENCE: CT Public Swimming Pool Design Guide Section 6.2.

Changes to Module/Annex:
Agree. Code revised.

11) *Comment:*
4.7.1.7.2.1 -- Recirculation system piping shall be designed so that the water velocities do not exceed **6** feet…….

Changes to Module/Annex:
Disagree. The rationale for 8 fps. is to minimize energy consumption and provide flexibility to accommodate subsequent changes in operation or renovation.

12) *Comment:*
TABLE 4.7.1.10 --(The values in the table are VERY conservative compared to CT design standards. CT uses 8 hours for recreational pools, 2 hours for wading pools, 1 hour for whirlpool spas and 30 min for splash/spray parks.) -- There will be a huge discrepancy new old vs. new construction. Will be hard to justify when the existing turnover rates have not been an issue in CT

Changes to Module/Annex:
Partially agree. Turnover rates revised.

13) *Comment:*
4.7.2.1.1.1 -- (Move this section) **4.7.2.a Filtration shall be required for all aquatic venues that recirculate water. --** This section belongs under "Filtration" and not just under "Granular Media Filters" since it applies to all types of filtration.

Changes to Module/Annex:
Agree. Code revised.

14) *Comment:*
4.7.2.1.3.1 -- High-rate granular media filters shall be designed to operate at no more than **20 gpm/ft², or as approved in accordance with NSF Standard 50. – REFERENCE:** CT Public Swimming Pool Design Guide Section 13.2 and NSF Standard 50.

Changes to Module/Annex:
Disagree. Sand filters do not work at 15 or 20 gpm/sf in terms of efficient pathogen removal and protecting public health; reducing filtration rates is the first step toward addressing this problem.

15) *Comment:*
4.7.2.3.2 -- The design filtration rate for surface-type cartridge filter shall not exceed **0.375** gallons per minute per square foot. – REFERENCE: CT Public Swimming Pool Design Guide Section 13A.2 and NSF Standard 50.

Changes to Module/Annex:
Disagree. Annex provides rationale for requirement.

16) *Comment:*
4.7.5.2.1 -- (CT turnover rate for whirlpool spas is 1 hour.)

Changes to Module/Annex:
The turnover rates for all pools including spas have been revised.

17) *Comment:*
5.7.2.1.1 -- High rate granular media filters shall be operated at no more than **20** gpm/ft². – REFERENCE: CT Public Swimming Pool Design Guide Section 13.2 and NSF Standard 50.

Changes to Module/Annex:
Disagree. However code revised to change 12 gpm/sq ft to 15 gpm/sq ft.

18) *Comment:*
5.7.4.2 -- A volume of water totaling at least 4 gallons (15 L) per bather per day per facility is **recommended** shall be…… -- Set as a recommendation since depending on bather load the replenishment of water might not be necessary. Would dumping 4 gallons of water, if only one person used the spa that day, really make a difference. I think not!

Changes to Module/Annex:
Disagree. Admittedly, the exact amount of water to discharge is not known and will likely vary between pools (based on location, source water, bather density, temperatures, ect.). It is generally accepted that some water must be discharged to remove contaminants that will otherwise accumulate in pools over time. The starting point is a system to measure the discharge and a minimal rate to start with

19) *Comment:*
5.7.5.2 -- Spas shall be drained and cleaned when needed, but at least once every **two** weeks. -- You already say it needs to be drained as needed, if it a low use spa then once every two week, as we recommend in CT, should be sufficient. No need to waste water.

Changes to Module/Annex:
Disagree. Should there be a low use spa where the calculated frequency for draining based on volume and documented bather load is greater than 1 week, the owner/operator can request a variance from the AHJ.

20) *Comment:*
5.7.5.5 --(Isn't this section basically the same as 5.7.5.2) -- Redundant – do not need.

Changes to Module/Annex:
Agree. Code revised, consolidating and re- numbered.

(7) Steven Hawksley, Neptune-Benson, LLC (Coventry, Rhode Island)

1) *Comment:*
4.7.1.4.5.1 -- Gutters shall be level within a tolerance of plus or minus 1/16 inch -- +/- 1/8 inch can result in a ¼ inch difference in elevation which will result in inefficient full perimeter skimming

Changes to Module/Annex:
Agree. Code revised

2) *Comment:*
4.7.1.6.2.3 -- Outlets (Add)and shall be ANSI/APSP-16-2011 compliant –
REFERENCE: APSP-16-2011

Changes to Module/Annex:
Agree. Code revised.

3) *Comment:*
4.7.1.6.5.1 -- For pools with two outlets flow velocities shall meet ANSI/APSP-16-2011 based on 100% of design flow. For pools with three outlets flow velocities shall be based on 67% of design flow. For pools with four outlets flow velocities shall be based on 50% design flow. -- Requiring pools with more than two outlets to meet the same 100% flow velocity criteria will discourage designers from specifying more than two outlets. The more outlets in a pool the safer it is.

Changes to Module/Annex:
Agree. Annex discussion added regarding more than 2 outlets in a system.

4) *Comment:*
4.7.1.7.2.1 -- Recirculation system piping shall be designed so that water velocities do not exceed 10 feet per second for pressure piping. -- 10 fps has been widely used for pressure piping in the pool industry for decades with success. Lower velocities should be the decision of the Pool Design Consultant

Changes to Module/Annex:
Disagree. The rationale for 8 fps. is to minimize energy consumption and provide flexibility to accommodate subsequent changes in operation or renovation.

5) *Comment:*
4.7.1.7.3.4 -- DELETE? Redundant to 4.7.1.7.3.1?

Changes to Module/Annex:
Agree. Code revised to eliminate duplication.

6) *Comment:*
4.7.1.8.1.1 -- All filter recirculation and feature pumps shall have a strainer/screen device on the suction side to protect the filtration and pumping equipment -- feature pumps should have this protection as they do not have the benefit of a filter to remove debris prior to returning to the pool.

Changes to Module/Annex:

Disagree. Feature pumps are not required equipment for water quality/treatment, therefore the MAHC does not mandate installation of strainers/screen devices for non-recirc system pumps.

7) *Comment:*
4.7.2.1.3.1 -- High-rate granular media filters shall be designed to operate at no more than 15 gpm/ft2 of filter surface. The minimum depth of filter media above the under-drains (or laterals) shall be set by the filter manufacturer. Filters with bed depths of 9”-12” shall operate at no greater than 12 gpm/ft2 of filter surface area. A minimum bed depth of 15” is required for flow rates greater than 12 gpm/ft2 to a maximum of 15 gpm/ft2. -- Allowable filter rate is directly related to bed depth.

Changes to Module/Annex:
Disagree. Sand filters do not work at 15 or 20 gpm/sf in terms of efficient pathogen removal and protecting public health; reducing filtration rates is the first step toward addressing this problem.

8) *Comment:*
4.7.2.1.4.1 -- Delete and incorporate into 4.7.2.1.3.1

Changes to Module/Annex:
Disagree. Included as a separate section for clarity and emphasis.

9) *Comment:*
4.7.2.2.3.1 -- DELETE -- This requirement precludes the use of several mfg's precoat filters proven means of introducing media.

Changes to Module/Annex:
Agree. Code revised.

10) *Comment:*
4.7.3.2.4.2 – DELETE -- Introducing disinfection chemicals prior to filtration can cause problems with filters, UV and Ozone systems which are typically located prior to any chemical introduction points.

Changes to Module/Annex:
Agree. Code revised.

11) *Comment:*
5.7.2.1.4 -- Delete and incorporate into 5.7.2.1.4.1 -- Requiring backwash (BW) frequency should be dictated by pressure differential or flow rate. To require a BW prior to reaching pressure differential reduces filter efficiency and wastes water and energy.

Changes to Module/Annex:
Disagree. The requirement is based on removing collected contaminants from the recirculation system and reducing the fouling of filter media in the filters.

12) *Comment:*
5.7.2.1.4.1 -- Backwashing of a filter shall be preformed when the pressure differential reaches the recommended differential by the filter manufacturer unless the system design flow rate can no longer be achieved.

Changes to Module/Annex:

Agree. Code revised.

13) *Comment:*
5.7.2.2.2 -- Precoating of the filters shall be required in a closed loop (precoat mode) to minimize the potential for media or debris to be returned to the pool -- I agree with this paragraph. However it is a direct contradiction to 4.7.2.2.3.1

Changes to Module/Annex:
Partially agree. Code revised.

14) *Comment:*
5.7.3.2.7.7.2 -- Carbon dioxide shall be fed using a Co2 feed system from a pressurized cylinder. -- Co2 does not need venture or booster pumps for feed

Changes to Module/Annex:
Agree. Code revised.

15) *Comment:*
5.7.5.3 – Delete -- Temperature of water and backwash rate are not related.

Changes to Module/Annex:

Agree. Code revised. Section deleted

(8) Mary Ostrowski, American Chemistry Council (Washington, D.C.)

1) *Comment:*
4.7.3.2.8.2-- In-line generators shall use **only pool-grade** salt dosed into the POOL to introduce CHLORINE into the POOL vessel through an electrolytic chamber. --

Potential health risks associated with disinfection byproducts forming from salt impurities, including bromide and iodide.

For example, Kristensen et al. (2010) directly correlated bursts of bromodichloro-methane formation to salt addition to pool water over a monitoring period of more than one year. In a comparison study of common disinfectant methods, Lee et al. (2006) found salt brine electrolysis formed the highest levels of bromodichloro-methane, dibromochloro-methane and bromoform.

Zwiener et al. (2007) note that iodized table salt should not be used in salt pools because iodized disinfection byproducts, which are generally more toxic than chlorinated disinfection byproducts, could form.

Additionally, there is a perception by some (see About.com reference) that salt water pools can be operated with table salt (which is commonly iodized). –

REFERENCES:

- "On-line monitoring of the dynamics of THM concentrations in a warm public swimming pool using an unsupervised membrane inlet MS system with off-site real-time surveillance," G. Kristensen, M. Klausen, V. Hansen, F. Lauritsen, Rapid Communications in Mass Spectrometry, 2010, 24(1) 30-34. CA 152:128058;

- "The characteristics of THM production by different disinfection methods in swimming pool water," J. Lee, K. Ha, K. Zoh, Hangug Hwangyeong Bogeon Haghoeji, 2006, 32(2) 171-178;
- C. Zwiener, et al., "Drowning in DBPs? Assessing swimming pool water," Environmental Science & Technology, 2007, 41(2) 363-372.
- About.com: What is a Salt Water Pool? (online: accessed 8-15-13, http://poolandpatio.about.com/od/maintainingyourpool/qt/What-Is-A-Salt-Water-Pool.htm)

Changes to Module/Annex:
Agree. Code and annex revised.

2) *Comment:*
4.7.3.2.8.3-- Brine (Batch) generators shall produce CHLORINE through an electrolytic cell that is located in the mechanical room**. CHLORINE shall be produced from brines composed of pool-grade salt.** – Please see entry above.

Changes to Module/Annex:
Agree. Code revised.

(9) Dominic Shaw, Waterline Studios, Inc. (Dripping Springs, TX)

1) *Comment:*
4.7.1.4.4.2 – Surge tanks that serve splashpads or other elements that do not retain water shall have a minimum capacity of 5000 gallons. -- There is not a standard for minimum water volumes on splashpad and interactive elements that have high bather loads. In addition to the minimum recirculation rates for these elements a minimum water volume should be set for the tanks to ensure that the water can be balanced under the load conditions they will see.

Changes to Module/Annex:
Disagree. Tanks serving Interactive Water Play attractions such as splash pads are not surge tanks.

2) Comment:
4.7.1.8.1 – Strainers serving filter pumps or recirculation pumps shall be able to supply 80% design flow rate at 50% blockage of their open area. -- The main effort in recirculation is to ensure proper flow rates through the filters even when becoming loaded. This portion of the module is missing the effect of small strainer baskets on the flow rates of the pumps. A handful of leaves in a small basket can drastically reduce the flow rate and therefore the sanitation rate through the filter. This should be

addressed in this module.

Changes to Module/Annex:
Please re-submit comment with supporting documentation and specific wording.

(10) Ron Sutula, Schlitterbahn Water Parks (Galveston, TX)

1) *Comment:*
4.7.1.3.1.3 – Pools shall use wall and floor inlets to provide adequate mixing -- *should include - during new construction or renovation of existing circulation system

Changes to Module/Annex:
Disagree. Not needed as the design requirements/Section 4 only applies to new construction or significant alteration, unless otherwise specifically stated.

2) *Comment:*
4.7.1.3.3.3 – Wall inlets - Inlets shall be directionally adjustable -- should read possibly - Inlets shall provide effective distribution of water to mix, suggest directional eyelets for troubled areas

Changes to Module/Annex:
Partially agree. Code revised.

3) *Comment:*
4.7.1.3.3.4.1– Inlets shall be placed within 5ft of each corner of the pool -- should read - Inlets on new construction shall be placed within 5ft of each corner of the pool where inlets are utilized on the wall surface.

Changes to Module/Annex:
Disagree. Not needed as the design requirements/Section 4 only applies to new construction or significant alteration, unless otherwise specifically stated.

4) *Comment:*
4.7.1.3.3.6.2 – If dye test reveals inadequate mixing in the pool after 15-20 minutes, the recirculation system shall be modified to assure adequate mixing -- suggest - the appropriate modifications will be done to provide adequate mixing, including repositioning directional eyelet

Changes to Module/Annex:
Agree. Code has been revised. Annex contains some guidance on remediation.

5) *Comment:*
4.7.1.4.4.3.1 – The surge tank's minimum, maximum, and unoccupied pool levels shall be marked on the tank -- suggest adding - where visual inspection is accessible or can be clearly identified without removing equipment.

Changes to Module/Annex:
Agree. Code revised.

6) *Comment:*
4.7.1.4.6.1 – Automatic makeup water supply equipment shall be provided to maintain continuous skimming of all pools -- suggest revising - Automatic makeup water supply equipment is recommended to control appropriate waterline level to maintain continuous skimming of all pools during operating hours. The fear with automatic water supply equipment is that they fail and can waste large amounts of water if left to operate on its own. If an auto level is installed, some may never know of a leak in the pool unless they pay attention to the water bill.

Changes to Module/Annex:
Disagree. No data submitted to support commenter's recommendation. However, code revised to require automatic make-up water supply equipment for pools with perimeter overflow systems but not for pools with skimmers.

7) *Comment:*
4.7.1.5.2.1– Skimmers shall be so located as to provide effective skimming of the entire water surface -- suggest revising - When skimmers are present, they shall be so located as to provide effective skimming of the entire water surface

Changes to Module/Annex:
Agree. Code revised to clarify "Where skimmers are used…"

8) *Comment:*
4.7.1.5.2.3 – Wind direction shall be considered in skimmer placement -- suggest revising - Wind direction shall be considered during new construction for the skimmer placement

Changes to Module/Annex:
Disagree. Not needed as the design requirements/Section 4 only applies to new construction or significant alteration, unless otherwise specifically stated.

9) *Comment:*
4.7.1.5.4.2 – Each skimmer shall be equipped with a trimmer valve capable of

distributing the total flow between individual skimmers -- not sure if this is feasible on commercial applications where we use a shared manifold for skimmer outlets

Changes to Module/Annex:
No change suggested

10) *Comment:*
4.7.1.5.6.1 – Floatation tests should be performed annually to ensure effective skimming and proper adjustment of flow distribution between skimmers -- suggest revising - For proper adjustment of flow distribution between skimmers, flotation tests should be performed to ensure effective skimming and continued as signs of ineffective skimming have occurred

Changes to Module/Annex:
Agree. Code revised to differentiate between requirement for initial construction compliance/commissioning flotation test and operational aspect in Section 5.

11) *Comment:*
4.7.1.6.2.3 – Outlets shall be located no less than 6 feet apart, measuring between the centerlines of the drain covers -- suggest staying with VGB minimum requirements - 3 feet apart

Changes to Module/Annex:
Agree. Code revised.

12) *Comment:*
4.7.1.6.4.2 – The main drain system shall be equipped with a proportioning valve(s) to adjust the flow distribution between the main drain piping and the surface overflow system piping -- suggest revising - New construction or renovation to recirculation system

Changes to Module/Annex:
Disagree. All items in Section 4, unless otherwise stated, are only applicable to new construction or substantial renovation. Please see statement at the beginning of this chapter.

13) *Comment:*
4.7.1.7.2.1 –Recirculation system piping shall be designed so that water velocities do not exceed 8 feet per second on the discharge side of the recirculation pump unless alternative values have proper engineering justification -- suggest staying with ANSI/APSP - 1 2003; 10 ft / sec.

Changes to Module/Annex:

Disagree. The rationale for 8 fps. is to minimize energy consumption and provide flexibility to accommodate subsequent changes in operation or renovation.

14) *Comment:*
4.7.1.7.5.1 – New and renovated suction and supply pool piping shall be subjected to an induced static hydraulic pressure test for 6 hours -- suggest adding - where the AHJ requires this in the building codes

Changes to Module/Annex:
Disagree. However, code revised to indicate duration of test is as specified by the design engineer and/or AHJ.

15) *Comment:*
4.7.1.8.2.4– Where vacuum filters are used, a vacuum limit switch shall be provided on the pump suction line. -- suggest they define the intent behind this, a limiting switch could shut down equipment providing a period when no movement is taking place on the recirculation system

Changes to Module/Annex:
Agree. Annex revised.

16) *Comment:*
4.7.1.8.3.5 – All gauges shall be equipped with valves to allow servicing under operating conditions -- suggest revising or omitting - to have adjustment valves could alter actual results if someone failed to re-open the valve, giving a false reading.

Changes to Module/Annex:
Disagree. Many aspects of pool systems are dependent on proper operation of the equipment. The possibility of improper operation does not outweigh the value of having valves to allow for service while the pool is operating.

17) *Comment:*
4.7.1.9.2 – All pumps shall be installed with a manual adjustable discharge valve to provide a backup means of flow control as well as for system isolation -- suggest revising - New construction or improvements to the circulation system pump shall be installed with a manual adjustable discharge valve to provide a backup means of flow control as well as for system isolation

Changes to Module/Annex:

Disagree. All items in Section 4, unless otherwise stated, are only applicable to new construction or substantial alteration.

18) *Comment:*
TABLE 4.7.1.10 – Maximum Allowable Turnover Times -- suggest clarification - not clear on intent for these numbers, the annex portion reads information on coagulant used filtration, but these maximums don't fit common practice by NSPF, APSP. The times are more stringent for commercial activities where larger bodies of water would be a more diluted. Here we also have some unusual explanation of turnover using multipliers and citing the group PWTAG as having credible knowledge on treatment and quality standard for pools and spas.

Changes to Module/Annex:
Partially agree. Turnover rates revised.

19) *Comment:*
4.7.2.1.3.1 – High-rate granular media filters shall be designed to operate at no more than 12 gpm/ft2 -- suggest staying at industry practice - 20 gpm/ft2 maximum -- Trouble here is the annex continues to display "drinking water" filtration practices. Drinking water has controlled variables because it is a closed system. Pools and spas have more uncontrollable variables including weather factors, open surface areas, and bathers. If there was practices existing common to all parks or venues, then this could be an option

Changes to Module/Annex:
Disagree. Sand filters do not work at 15 or 20 gpm/sf in terms of efficient pathogen removal and protecting public health; reducing filtration rates is the first step toward addressing this problem.

20) *Comment:*
4.7.2.3.2 – The design filtration rate for surface type cartridge filters shall not exceed 0.30 gallons per minute per square foot -- suggest staying with current standard - 0.375 gpm/ft2 -- Annex explanation makes sense but how do we formulate a way to determine when the absolute limit on these filters have been reached. If it's clean and white we would continue to use it.

Changes to Module/Annex:
Disagree. Annex provides rationale for requirement. Commenter did not provide data/ information to support proposed change.

21) *Comment:*
4.7.3.2.1.5.1 – A clear (Plexiglass) protective cover shall be installed around the

chemical feed pumps to shield operating staff and equipment from potential sprays from leaking connections. -- suggest revising - recommend a physical barrier between feed equipment and other pool components. An optional protective cover shall be installed around the chemical feed pumps to shield from potential sprays from leaking connections. The covering shall not advance the deterioration of the equipment.

Changes to Module/Annex:
Partially agree. Code revised.

22) *Comment:*
4.7.3.2.4.1 & 4.7.3.2.4.2 – contradicts all manufactures recommendations for chemical injection. Does this prematurely degrade the equipment such as pump impeller, filter, probes, etc.

Changes to Module/Annex:
Agree. Code revised.

23) *Comment:*
4.7.3.2.5.1 – Automatic chemical feed control systems shall be used to turn on or off a chemical feeder. -- suggest – Automatic chemical feed control systems are recommended to turn on or off a chemical feeder, but should mechanical interruption occur then manual control of feeder(s) is acceptable for a short duration until unit is replaced.

Changes to Module/Annex:
Disagree. Code language does not include "recommendations" .

24) *Comment:*
4.7.3.2.7.7.2 – UV system operation shall be interlocked with the recirculation pump -- suggest rewording: UV system operation shall have a means to interrupt power should the recirculation pump stop, by means of interlocking, pressure switch, flow sensor, or other mechanical means that would help assure pump is operational NSF 50 does not specify the requirement for the UV unit to be interlocked

Changes to Module/Annex:

Agree. Code revised.

25) *Comment:*
4.7.3.2.7.7.3 – An inline strainer shall be installed after the UV unit to capture broken lamp glass or sleeves -- suggest revising - An inline strainer installed after the UV unit

is recommended to capture broken lamp glass or sleeves by available mean necessary or acquiring from UV manufacturer. -- NSF 50 does not have this requirement listed for operating UV systems, however certain manufacturers have the options available. However running a unit according to manufacturers specifications and placements, would not cause any situation where bulb or sleeves could rupture. Now a service or repair, the unit should be isolated or pulled out of system path so in the event glass fragments are noticed, the proper cleaning could occur.

Changes to Module/Annex:
Disagree. Code language does not include "recommendations" .

26) *Comment:*
4.7.3.2.8.4 – Electrolytic generators shall have a TDS readout or a low salt indicator -- Suggest revising – Electrolytic generators shall have indicators which display some or all of the following depending on manufacturers options; TDS, low salt, flow, and delivery %. -- NSF 50 does not require this to be listed as an approved device

Changes to Module/Annex:
Disagree. The two suggested items to add do not replace the initial requirement and could offer an unintended substitution of a "flow indicator" for a "TDS readout"

27) *Comment:*
4.7.3.2.10.3 – The generator(s) shall be interlocked per MAHC Section 4.7.3.2.5.4 -- possible typographical errors – The controller(s) shall be interlocked per MAHC Section 4.7.3.2.5.4

Changes to Module/Annex:
Agree. Code revised.

28) *Comment:*
4.7.4.2 – A means of intentionally discharging and measuring the volume of both discharged Pool water and filter backwash wastewater (or alternate means of achieving the same result) shall be installed. -- suggest clarification on this topic – Is this an automatic water leveler?

Changes to Module/Annex:
Partially agree. Code revised for clarity. Note-annex provides explanation as to intent.

29) *Comment:*
4.7.5.2.1–All spa venues as defined in the MAHC shall comply with the following maximum allowable turnover times: 1) 0.25hrs for spas volumes less than 10,000

gallons or 2) 0.5hrs for spa volumes greater than or equal to 10,000 gallons -- suggest several changes based on common practices -- ANSI/APSP recommendations for spas is 0.5 hrs for spa volumes typically meeting a true classification of spa. Therefore based on volume, units under 5,000 gallons would be more influenced by ANSI/APSP recommendations Spas greater than or equal to 5001 gallon spa pools should be equipped to have adequate filtration and recirculation of the system to minimize the opportunities for contamination. Larger volume spas would have a lower chance of contamination than smaller volume spas. Based on volume you should pursue turnover in the range of 1-2hrs.

Changes to Module/Annex:
Partially agree. The turnover rates for all pools including spas have been revised.

30) *Comment:*
5.7.1.1.3 – For gutter or skimmer Pools with main drains, the required recirculation flow shall be as follows during normal operation: 1) at least 80% of flow through the perimeter overflow system and 2) no greater than 20% through the main drain -- suggest staying with common practices unless scientific research not identified here states better – 75% skimmer / 25% main drains -- Annex does not indicate recommendation

Changes to Module/Annex:
Disagree. Many states and organizations are currently using 80/20.

31) *Comment:*
5.7.1.4.6 – Broken or missing skimmer weirs shall be replaced immediately -- suggest revising – Broken or missing skimmer weirs shall be replaced immediately, unless damage has occurred rendering replacement impossible. Pool surface removal on skimmers missing weirs must be adjusted to effectively pass the floatation test.

Changes to Module/Annex:
Disagree. Should time be needed due to logistical considerations, the facility owner/operator can contact the AHJ to discuss.

32) *Comment:*
5.7.2.1.1 – High-rate granular media filters shall be operated at no more than 12 gpm/ft2 -- suggest staying at industry practice - 20 gpm/ft2 maximum -- Trouble here is the annex continues to display "drinking water" filtration practices. Drinking water has controlled variables because it is a closed system. Pools and spas have more uncontrollable variables including weather factors, open surface areas, and bathers. If there was practices existing common to all parks or venues, then this could be an option

Changes to Module/Annex:
Disagree. However code revised to change 12 gpm/sq ft to 15 gpm/sq ft

33) *Comment:*
5.7.5.3– The backwash rate of sand filters shall be adjusted to match the temperatures of the water used for backwashing -- suggest clarification – possible typographical error

Changes to Module/Annex:
Agree. Code revised, Section deleted.

(11) Richard Cacioppo, Center for Public Lodging and Pool Study (Princeton, NJ)

1) *Comment:*
4.7.3.3 – The following regulations shall apply to all public *and private* swimming pools, spas and hot tubs:

"*Cleaning Swimming Pools*

A vacuum-cleaning system shall be provided. When an integral part of the recirculation system, sufficient connections shall be located in the walls of the swimming pool, at least eight inches below the water line. *

The operator of every pool and spa shall have available and use on a regular basis an electric robotic vacuum cleaner with an onboard filter bag compliant with the standards and certified by the NSF with an effective pore size to filter 50% of all Crytosporidium occysts with every passing.

The operator of every pool and spa shall have available and use on a regular a handheld, power-drive vacuum cleaner compliant with the standards and certified by the NSF. capable of attaching a standard pool pole with an onboard micro filter bag with an effective pore size to filter 50% of all Crytosporidium occysts with every passing.

Visible dirt on the bottom of the swimming pool shall be removed every 24 hours or more frequently as required. Visible scum or floating matter on the swimming pool surface shall be removed within 24 hours by flushing or other effective means." *

BASIS For CHANGE:
1.) Any Health Code Must Include Guidelines and Regulations For Cleanliness. The MAHC will include a segment on *Disinfection and Water Quality* along with *Recirculation and Filtration*. Ignoring cleanliness caused by dirt, germs and inorganic as well as organic contaminants in a pool and spa water will ignore the first principal of cleanliness and sanitation. Non-profit organizations like the *National Sanitation Foundation* for consumer products, the *Food Safety Institute of America's Hazard Analysis Critical*

Control Points (HACCP) program and the private for profit *Ecolab* help set guidelines, codify, monitor and inspect and enforce regulations relating to basic cleanliness. It would be a gross malfeasance of responsibility for the CDC to propose uniform national guidelines to the 3200+ state and local health agencies that regulate aquatic facilities that ignore the need and proper manner to clean such facilities;

2.) There Is A Profound Need. Assuring the healthiest aquatic environment requires the regular use of the available state-of-the-art, state-of-the-science cleaners and vacuums independent of the main pool filter and circulation systems;

3.) Most filters used today are ineffective and incomplete. The gross majority of public and private residential pools use high-rate sand filters that are incapable in removing inorganic contaminating particles without a flocculent and coagulants;

4.) Respect and Credibility Must Be Maintained. The MAHC was originally intended as to quell the spread of deadly Cryptosporidium and other recreational water diseases. The steering and individual technical committees will have gone off course, other than the proposed Module for Disinfection and Water Quality, Hygiene and Fecal/Vomit Blood Contamination Response if the code fails to include regulations for proper cleaning methodology and equipment. This will result in losing the respect and credibility for this undertaking.

5.) History Cannot Be Ignored; Failure To Do So Will Be Regressive and Negligent. In 1926 the American Public Health Association Committee of Sanitary Engineers published a report and proposed uniform regulations that recognized the necessity of all pools having an independent vacuum cleaner available and used to remove particles;

6.) The MAHC Must Be A Role Model. While the gross majority of the reported 3200+ state and local agencies that issue ordinances and regulations relating to aquatic facilities at best include and enforce only those very general in nature, some states do require the use of an independent vacuum cleaner. The MAHC should provide the most in-depth guidelines;

7.) Regulations Relating To Proper Cleaning Will Save More Lives and Prevent More Injuries Than The Virginia Graham Baker Act. That federal legislation was an industry response to deaths and injuries caused by entrapment. Far more deaths, injuries and illnesses can be prevented by strong regulations requiring proper cleaning methodology and equipment;

8.) Both Robotic Cleaners For General Cleaning and Handheld/Extended Reach Vacuum Cleaners Are Necessary. Robotic vacuums will only vacuum, brush and filter approximately 90% of the surface area of a pool, floors;

9.) The Guidelines Should Also Be Set For Private Residential Pools, Spas and Hot Tubs;

10.) As A Peripheral Benefit, These Products Will Save Precious Energy.

REFERENCE: White Paper on The Need For Strict Regulations For Cleaning Swimming Pools & Spas, and The Mandatory Use of Cleaners and Vacuums In The Center For Disease Control's Proposed Model Aquatic Health Code. By Richard K. Cacioppo, Sr., J.D. August 29, 2013

See white paper at the end of this document.

Changes to Module/Annex:
Partially agree. Note -pool cleaning systems are addressed in the MAHC Design and Construction module. Integral vacuum systems are prohibited in that module..

12) Rick Fuller, Hyland Hills Park and Rec (Denver, Colorado)

1. *Comment:*
4.7.1.5.1.2 -- At least one skimmer **or acceptable alternative gutter technologies** shall be provided… -- This section seems to require the use of skimmers on all pools. Skimmers in waterparks are not as effective as overflow drains due to continuous fluctuations in water levels

Changes to Module/Annex:
Partially agree. Code revised to clarify applicability and intent.

2. *Comment:*
4.7.1.5.1.4 -- See comments above..

Changes to Module/Annex:

Agree. Code revised.

3. *Comment:*
4.7.1.5.1.5 -- This is confusing as it seems to indicate that skimmers are not mandatory but see 4.7.1.5.1.2

Changes to Module/Annex:
Agree. Code revised to clarify "Where skimmers are used…"

4. *Comment:*
4.7.1.5.1.6 -- Again, this is confusing if all pools have to use skimmers. Wave pools are much wider than 30 feet.

Changes to Module/Annex:

Agree. Code revised to clarify skimmer requirements.

5. *Comment:*
4.7.1.10.2.1 -- Change to 6 hour turnover times. -- Our pools are designed for a 6 hour turnover. The turnover rates set forth in the table are not achievable without substantial medication and expense.

Changes to Module/Annex:
Partially agree. Turnover rates revised.

6. *Comment:*
4.7.3.2.4.2 – Delete -- This provision is counter to normal practice and design specifications. See CAT 2000 automated controller owners manual. This could cause damage to boilers.

Changes to Module/Annex:
Agree. Code revised.

7. *Comment:*
4.7.3.2.7.7 -- This seems to be counter to 4.7.3.2.4.2

Changes to Module/Annex:
Agree. Section 4.7.3.2.4.2 has been revised.

8. *Comment:*
4.7.4 -- In addition to cost factors, drought conditions in the west, including Colorado, make any specific requirement difficult to undertake – especially when based solely on attendance, not actual water quality in each venue.

Changes to Module/Annex:
Disagree. All bathers add wastes that cannot be removed by sand filters and chlorine. This section of the MAHC addresses contaminants that cannot be removed cost-effectively by other means to help control water quality and air quality for pools.

9. *Comment:*
5.7.4.2 -- In addition to cost factors, drought conditions in the west, including Colorado, make any specific requirement difficult to undertake – especially when based solely on attendance, not actual water quality in each venue. Many persons in attendance at a waterpark use only a few aquatic venues – not all such venues.

Changes to Module/Annex:

Disagree. All bathers add wastes that cannot be removed by sand filters and chlorine. This section of the MAHC addresses contaminants that cannot be removed cost-effectively by other means to help control water quality and air quality for pools.

13) Robert Burrows, SureWater Technologies, Inc (Winter Park, Florida)

1. *Comment:*
4.7.3.2.3.1 -- All chemical adjustment feeders shall be either positive displacement, erosion, or flow through venturi type -- NSF/ANSI Standard 50 – **REFERENCE:** http://info.nsf.org/Certified/Pools/Listings.asp?ProductType=50H&

Changes to Module/Annex:
Agree. Section 4.7.3.2.3 has been deleted.

2. *Comment:*
4.7.3.2.7.1 -- Liquid solution feeders shall include either positive displacement pumps or flow through venturi type -- NSF/ANSI Standard 50 – **REFERENCE:** http://info.nsf.org/Certified/Pools/Listings.asp?ProductType=50H&

Changes to Module/Annex:
Disagree. Liquid solution feeders are intended to feed a liquid chemical solution. The reference provided by the commenter is for "Flow Through" chemical feed equipment, such as erosion chemical feeders, and are covered in a different section.

3. *Comment:*
4.7.3.2.9.3 -- pH adjustment feeders shall be either positive displacement or flow through venturi type -- NSF/ANSI Standard 50 – **REFERENCE:** http://info.nsf.org/Certified/Pools/Listings.asp?ProductType=50H&

Changes to Module/Annex:
Disagree. Liquid solution feeders are intended to feed a liquid chemical solution. The reference provided by the commenter is for "Flow Through" chemical feed equipment, such as erosion chemical feeders, and are covered in a different section.

14) Richard Martin, NSF International (Ann Arbor, Michigan)

1. *Comment:*
4.7.1.3.2.1 – **Explanation of comments:** Text below in yellow highlight is suggested for addition

~~Text below in yellow highlight and strikethrough is recommended for removal~~

Water inlets (floor or wall) shall be certified in accordance with NSF/ANSI Standard 50. Inlets shall be installed and used in accordance with manufacturer instructions and aquatic facility designer criteria for optimum circulation. **Rationale:** NSF has balloted and passed evaluation and testing criteria for water return inlets. This section of NSF 50 has not yet been published yet but will be issued in late 2013 or early 2014. The criteria includes inlet material safety, corrosion resistance, head loss (pressure or pumping resistance), pressure safety, horizontal and or vertical load testing, dimensional compliance for connections (ie threaded ends) and UV strength for plastic fitting materials for outdoor use. Manufacturers may also have their inlet or return fittings tested for distance of water projection into the pool at a range of pressures -- Health, safety and performance issue -- **REFERENCE: NSF/ANSI Standard 50 is the criteria used to evaluate, test, and certify pool, spa, and recreational water equipment. It's scope includes all materials, products and equipment for use at pool spas and other aquatic facilities. NSF. Therefore this industry standard should be referenced. If any changes are sought to create product testing and certification criteria or change criteria, that effort should be channeled through the NSF/ANSI Standard 50 Joint Committee which is the group of public health officials, manufacturers, and product users that oversees the development of NSF/ANSI Standard 50.**

Changes to Module/Annex:
Agree. MAHC specifies that all equipment used or proposed for use shall be listed by NSF International, Underwriters Laboratories or another ANSI-accredited certification organization.

2. *Comment:*
4.7.1.3.3.1 – Water inlets (wall) shall be certified in accordance with NSF/ANSI Standard 50. Inlets shall be installed and used in accordance with manufacturer instructions and aquatic facility designer criteria for optimum circulation.

Rationale: NSF has balloted and passed evaluation and testing criteria for water return inlets. This section of NSF 50 has not yet been published yet but will be issued in late 2013 or early 2014. The criteria includes inlet material safety, corrosion resistance, head loss (pressure or pumping resistance), pressure safety, horizontal and or vertical load testing, dimensional compliance for connections (ie threaded ends) and UV strength for plastic fitting materials for outdoor use. Manufacturers may also have their inlet or return fittings tested for distance of water projection into the pool at a range of pressures -- Health, safety and performance issue -- **REFERENCE:** NSF/ANSI Standard 50 is the criteria used to evaluate, test, and certify pool, spa, and recreational water equipment. It's scope includes all materials, products and equipment for use at pool spas and other aquatic facilities. NSF. Therefore this industry standard should be referenced

Changes to Module/Annex:
Agree. MAHC specifies that all equipment used or proposed for use shall be listed by NSF International, Underwriters Laboratories or another ANSI-accredited certification

organization.

3. *Comment:*
4.7.1.4.1.1 – Gutter systems and overflows shall be certified in accordance with NSF/ANSI Standard 50. Systems for outdoor use shall be certified for UV strength and weathering resistance.

Rationale: NSF has balloted and passed evaluation and testing criteria for gutter systems and overflows. This section of NSF 50 has not yet been published yet but will be issued in late 2013 or early 2014. The criteria includes material safety, corrosion resistance, open area flow capacity, vertical load testing, dimensional compliance for connections (ie threaded ends) and UV strength for plastic fitting materials for outdoor use. -- Health, safety and performance issue – **REFERENCE:** NSF/ANSI Standard 50 is the criteria used to evaluate, test, and certify pool, spa, and recreational water equipment. It's scope includes all materials, products and equipment for use at pool spas and other aquatic facilities. NSF. Therefore this industry standard should be referenced.

Changes to Module/Annex:
Agree. MAHC specifies that all equipment used or proposed for use shall be listed by NSF International, Underwriters Laboratories or another ANSI-accredited certification organization.

4. *Comment:*
4.7.1.5.1.1 – The use of manufactured direct suction skimmers shall be in accordance with the manufacturer's recommendations and NSF/ANSI Standard 50 certification of each skimmer. **Rationale:** Correct reference citation -- Health and safety issue and code compliance – **REFERENCE:** NSF/ANSI Standard 50is the standard for evaluation and testing of skimmers and state codes require the use of NSF/ANSI 50 Certified skimmers such as California, Florida, Texas, New York, North Carolina, etc.

Changes to Module/Annex:
Agree. MAHC specifies that all equipment used or proposed for use shall be listed by NSF International, Underwriters Laboratories or another ANSI-accredited certification organization.

5. *Comment:*
4.7.1.5.3.1 – The flow rate for the skimmers shall comply with manufacturer data plates or ~~ANSI~~ NSF/ANSI Standard 50 including Annex K. Rationale: Correct reference citation -- Health and safety standard reference – **REFERENCE:** Correct title of NSF/ANSI Standard 50

Changes to Module/Annex:

Agree. MAHC specifies that all equipment used or proposed for use shall be listed by NSF International, Underwriters Laboratories or another ANSI-accredited certification organization.

6. *Comment:*
4.7.1.6.1.1 – Submerged suction outlets, including sumps and covers, shall be certified to the requirements of ASME/ANSI A112.19.8-2007, 2008a or 2009b or the successor standard APSP-16-2011 by an independent 3rd party, nationally recognized testing laboratory (NRTL). **Rationale:** The ASME A112.19.8 standard was massively revised for 2007. There were small changes for 2008a and 2009b versions. Many products were tested and certified to those versions of the standard. In 2011 the APSP-16 standard became the successor standard. For completeness and to help code officials this statement should be included in the MAHC. Codes that only reference the old ASME standard will appear out of date and inadequate. -- Safety issue and code compliance and correct standard reference – **REFERENCE:** APSP-16 is the current and appropriate standard reference for submerged suction outlets.

Changes to Module/Annex:
Agree. Code revised.

7. *Comment:*
4.7.1.7.1.3 – Piping materials shall be suitable for potable water contact and shall meet NSF/ANSI Standard 61 and NSF/ANSI Standard 14 as applicable. Pressure rated plastic piping shall be certified to NSF/ANSI Standard 14 for potable water end use (such as NSF-pw) by an independent 3rd party nationally recognized testing laboratory (NRTL). **Rationale:** NSF 61 contains no performance evaluation or testing criteria. It only addresses material health safety via chemical extraction testing. NSF 61 addresses all material and product types in contact with process and drinking water. NSF/ANSI Standard 14 addresses many different material types and product types and multiple types of end uses for plastics piping systems. NSF/ANSI 14 is unique in that it includes many different end uses such as: drinking water, drain waste and vent, corrosive waste, radiant floor heating, fuel gas piping, fire safety systems, etc. If you are installing rigid plastic piping for pressurized water use, you need to specify use of piping that has been tested and certified in accordance with NSF/ANSI Standard 14 for potable water applications. This includes the NSF 61 materials health safety work and testing as well as the short term and long term burst pressure safety and dimensional compliance. If you do not include this reference and language the MAHC will not measure up to the existing state code language or other model codes. -- Health, safety, and performance issue and code compliance – **REFERENCE:** NSF/ANSI Standard 61 and NSF/ANSI Standard 14 for pressure rated plastic piping. See existing ICC and UPC plumbing codes as well as state pool and spa codes as well as other existing pool and spa model codes.

Changes to Module/Annex:

Agree. Code revised.

8. *Comment:*
4.7.1.7.4.3 – All valves shall be clearly marked to indicate function by using color coding or detail labeling. Water circulation and filtration valves (such as multiport type valves) shall be certified in accordance with NSF/ANSI Standard 50 by an independent 3rd party nationally recognized testing laboratory (NRTL). Rationale: NSF/ANSI Standard 50 is the industry standard for pool and spa equipment and for pool, spa, and water park valves. Valves are evaluated and tested for criteria such as material health safety, corrosion resistance, burst pressure safety, and head loss or pumping losses and other issues. Various state codes and other model pool and spa codes reference NSF/ANSI Standard 50. MAHC should reference NSF/ANSI 50 as well in order to meet industry norms and best practice in safety. -- Health, safety, and performance issue and code compliance -- **REFERENCE:** NSF/ANSI Standard 50 is the standard for pool, spa, and waterpark valves used in flow control, filtration and circulation.

Changes to Module/Annex:
Disagree. Valve specification not needed in this section which is about "Component Identification". However, piping materials section revised to include piping components.

9. *Comment:*
4.7.1.8.1.1 – Strainers and pump shall be certified in accordance with NSF/ANSI Standard 50 by an independent 3rd party nationally recognized testing laboratory (NRTL). Pumps and strainers shall be installed and used in accordance with the manufacturer instructions. **Rationale:** NSF 50 certification includes the following design review, safety markings, pressure safety testing, pump curve verification testing, pump self-priming test (for self prime pumps), energy efficiency testing (for pumps with energy efficiency claims), strainer open area and volume, corrosion resistance and material health safety chemical and colorant extraction evaluation and testing requirements. NSF 50 reference is current best practice in leading state codes. Various state codes and other model pool and spa codes reference NSF/ANSI Standard 50. MAHC should reference NSF/ANSI 50 as well in order to meet industry norms and best practice in safety otherwise the MAHC will be viewed as inferior to current codes. -- Health, safety and performance issue and code compliance -- NSF/ANSI Standard 50 (Section 6-Pumps & Section 7-Strainers) and numerous state public health and safety pool and spa codes such as Florida, Texas, New York, California, New Mexico, North Carolina, Illinois, etc.)

Changes to Module/Annex:
Agree with intent but change not necessary since it is stated elsewhere in MAHC (Section 4.3.1.1, 4.3.2.1)

10. *Comment:*
4.7.1.8.2.2 – The recirculation pump(s) shall be selected to provide the required

recirculation flow in accordance with the maximum total dynamic head required by the entire RECIRCULATION SYSTEM under the most extreme operating conditions (*e.g., clogged filters in need of backwashing*). Pumps and strainers shall be certified in accordance with NSF/ANSI Standard 50 by an independent 3rd party nationally recognized testing laboratory (NRTL). Pumps and strainers shall be installed and used in accordance with the manufacturer instructions. **Rationale:** NSF 50 certification includes the following design review, safety markings, pressure safety testing, pump curve verification testing, pump self-priming test (for self prime pumps), energy efficiency testing (for pumps with energy efficiency claims), strainer open area and volume, corrosion resistance and material health safety chemical and colorant extraction evaluation and testing requirements. NSF 50 reference is current best practice in leading state codes. Various state codes and other model pool and spa codes reference NSF/ANSI Standard 50. MAHC should reference NSF/ANSI 50 as well in order to meet industry norms and best practice in safety otherwise the MAHC will be viewed as inferior to current codes. -- Health, safety and performance issue and code compliance -- **REFERENCE:** NSF/ANSI Standard 50 (Section 6-Pumps & Section 7-Strainers) and numerous state public health and safety pool and spa codes such as Florida, Texas, New York, California, New Mexico, North Carolina, Illinois, etc.)

Changes to Module/Annex:
Agree with intent but change not necessary since it is stated elsewhere in MAHC (Section 4.3.1.1, 4.3.2.1)

11. *Comment:*
4.7.1.9.1 – A flow meter accurate to within +/- 5% of the actual design flow shall be provided for each filtration system. Flow meters shall be certified in accordance with NSF/ANSI Standard 50, Level 1 a (Level 1 accuracy is +/- 5% or better). Flow meters shall be installed and used in accordance with manufacturer instructions. **Rationale:** NSF has detailed evaluation and testing criteria to assess the material health safety, corrosion resistance, pressure safety and accuracy of flow meters. NSF has tested and certified flow meters that have met the +/-5% Level 1 criteria. -- Health, safety and performance issue and code compliance – **REFERENCE:** NSF/ANSI Standard 50 and other state codes such as California

Changes to Module/Annex:
Agree. Code revised.

12. *Comment:*
4.7.3.2.1.1 -- The POOL shall be equipped with chemical feed equipment such as flow through chemical feeders, electrolytic chemical generators, mechanical chemical feeders, chemical feeding pumps and automatic controllers that ~~is~~ have been tested and certified ~~by an NRTL~~ ~~in conformance with ANSI/~~to NSF/ANSI Standard 50 by an independent 3rd party nationally recognized testing laboratory (NRTL). -- Health, safety and performance issue and code compliance -- NSF/ANSI Standard 50 is the industry

standard for health and performance safety testing and certification of automatic controllers, chemical feeders, and chemical generators for the recreational pool and spa industry. NSF/ANSI Standard 50 is referenced in many state codes for these devices: CA, TX, FL, NY, NC, and many other state public health and safety codes for pool spa and waterpark applications.

Changes to Module/Annex:
Agree. Code revised.

13. *Comment:*
4.7.3.2.5 – 4.7.3.2.5 Feeder Controls and 4.7.3.2.10 Controllers could be combined for clarity -- Health, safety and performance issue and code compliance – **REFERENCE:** NSF/ANSI Standard 50 is the industry standard for health and performance safety testing and certification of automatic controllers, chemical feeders, and chemical generators for the recreational pool and spa industry. NSF/ANSI Standard 50 is referenced in many state codes for these devices: CA, TX, FL, NY, NC, and many other state public health and safety codes for pool spa and waterpark applications.

Changes to Module/Annex:
Agree. Code revised.

14. *Comment:*
4.7.3.2.7.1 – Liquid solution feeders shall include positive displacement pumps such as peristaltic pumps, diaphragm pumps, and piston pumps. Liquid feed pumps shall be certified in accordance with NSF/ANSI Standard 50 by an independent 3rd party nationally recognized testing laboratory (NRTL). **Rationale:** This section was poorly written and inconsistent with other sections as it relates to the actual performance quantification of chemical feeding and generation systems. . NSF/ANSI 50 addresses the material safety, operational life testing, chemical resistance, chemical output accuracy, chemical output quantity, operator safety, as well as burst pressure safety of these products and it should be properly required and referenced. -- Health, safety and performance issue and code compliance – **REFERENCE:** NSF/ANSI Standard 50 is the industry standard for health and performance safety testing and certification of chemical feeding pumps, automatic controllers, and chemical generators for the recreational pool and spa industry. NSF/ANSI Standard 50 is referenced in many state codes for these devices: CA, TX, FL, NY, NC, and many other state public health and safety codes for pool spa and waterpark applications.

Changes to Module/Annex:
Agree. However, no change needed in this section as the requirement for certification in accordance with NSF/ANSI Standard 50 by an independent 3rd party nationally recognized testing laboratory (NRTL) is included in the Feed Equipment, General section 4.7.3.2.1.1.

15. *Comment:*

4.7.3.2.8.7 – ~~The generator unit shall be UL listed and conform to NSF 50 or third party testing to the NSF Standard.~~ The generator unit shall be third party certified in accordance with UL1081 (for electrical/fire/shock safety) and to NSF/ANSI Standard 50 (for health safety, performance, output, and operational safety) by an independent 3rd party, nationally recognized testing laboratory (NRTL). **Rationale:** This section was poorly written and inconsistent with other sections as it relates to the electrical safety let alone the actual performance quantification of chemical feeding and generation systems. UL1081 addresses electrical shock, fire risks. NSF/ANSI 50 addresses the material safety, operational life testing, chemical output accuracy, chemical output quantity, operator safety, as well as burst pressure safety. -- Health, safety and performance issue and code compliance -- NSF/ANSI Standard 50 is the industry standard for health and performance safety testing and certification of chemical generators for the recreational pool and spa industry. UL1081 is the industry standard for electrical safety of chemical generators. These two standards are also already referenced in various state codes. NSF/ANSI Standard 50 is referenced in CA, TX, FL, NY, NC, and many other state public health and safety codes for pool spa and waterpark applications.

Changes to Module/Annex:

Partially agree. Code changed regarding UL certification. No change needed for NSF/ANSI Standard 50 as equipment certification already addressed in a previous section.

16. *Comment:*

4.7.3.2.8.10 – ~~Bromine generators shall be NSF approved.~~ The bromine generator unit, when used, shall be third party certified in accordance with UL1081 (for electrical/fire/shock safety) and to NSF/ANSI Standard 50 (for health safety, performance, output, and operational safety) by an independent 3rd party nationally recognized testing laboratory (NRTL). **Rationale:** This section was poorly written and inconsistent with other sections as it relates to the electrical safety let alone the actual performance quantification of chemical feeding and generation systems. UL1081 addresses electrical shock, fire risks. NSF/ANSI 50 addresses the material safety, operational life testing, chemical output accuracy, chemical output quantity, operator safety, as well as burst pressure safety. -- Health, safety and performance issue and code compliance – **REFERENCE:** NSF/ANSI Standard 50 is the industry standard for health and performance safety testing and certification of chemical generators for the recreational pool and spa industry. UL1081 is the industry standard for electrical safety of chemical generators. These two standards are also already referenced in various state codes. NSF/ANSI Standard 50 is referenced in CA, TX, FL, NY, NC, and many other state public health and safety codes for pool spa and waterpark applications.

Changes to Module/Annex:

Agree. However section deleted, as equipment certification already addressed in a previous section.

17. *Comment:*
SECTION: Multiple filter, skimmer, and chemical feeder sections -- Although filter, skimmer, and chemical feeder sizing in some of this module is consistent with NSF/ANSI Standard 50 recommendations and guidelines. In some areas it is less stringent (in chemical feeder sizing) and in other areas it is more stringent (cartridge filter flow rates per surface area of filter). The CDC has had staff have a voting position on the NSF/ANSI Standard 50 Joint Committee and could suggest changes to NSF/ANSI Standard 50. -- NSF/ANSI Standard 50 – **REFERENCE:** NSF 50 may be modified to modify sizing recommendations if it will help with MAHC adoption and use.

Changes to Module/Annex:
Agree. Collaboration with NSF to address inconsistencies will be planned.

18. *Comment:*
SECTION: Multiple filter sections and annex as well as other product sections of the MAHC -- Future research and development needs could be met via further performance quantification and speciation. As an example, the filter sections within NSF 50 for assessing the filtration performance (via actual laboratory challenge testing) could be modified to provide greater differentiation in product and system performance. Filters with customized media beds, coagulation etc. could be tested and quantified for their performance benefits in a way that would help buyers and facility operators make informed decisions to improve their facility health and safety. -- NSF/ANSI Standard 50 – **REFERENCE:** NSF 50 may be modified to create “levels” of performance for filters and other products. For example, filters must pass the 70% turbidity reduction test but could additionally be quantitatively graded on whether the filters achieve this value after 1, 2, 3, 4, or 5 volumetric turnovers. Further alternate challenge media could be utilized during filter testing and filters could likewise be quantitatively graded for how much of which micron size range of particulates were removed at each volumetric turn-over thereby creating a more data intensive solution.

Changes to Module/Annex:
Agree. Collaboration with NSF to address research needs and/or inconsistencies will be planned.

15) Jennifer Hatfield, APSP (Delray Beach, Florida)

1. *Comment:*
GENERAL: This module includes design and construction requirements that in many cases are currently inconsistent and contrary to the requirements found in the International Swimming Pool & Spa Code (ISPSC). These inconsistences should either

be deleted altogether or at a minimum changed to be consistent with the provisions found in the ISPSC (which are based on nationally approved standards and in some cases federal law). Specifically, in this module are many provisions addressing suction outlets and suction entrapment avoidance - if these provisions remain in the MAHC, then all of the sections dealing with suction outlets (drains) should be replaced with a reference to ANSI/APSP-7 or ANSI/APSP-16, accordingly. Doing so will provide consistency between the MAHC and the ISPSC. -- **REFERENCE:** See the 2012 International Swimming Pool & Spa Code (ISPSC).

Changes to Module/Annex:
Partially agree. Any inconsistencies in the MAHC with the requirements of the VGB will be revised so as to be consistent.

2. *Comment:*
GLOSSARY: "Deck" means surface areas serving the pool, beyond perimeter deck, which is expected to be regularly trafficked and made wet by pool users. GENERAL COMMENT: the definition for "Deck" is somewhat confusing and misleading. It indicates that the area immediately surrounding the pool wall is not part of the deck. It says the area "beyond the perimeter deck" is the deck. And how wide is the perimeter deck?

Changes to Module/Annex:
Terms have been defined in different modules. Terminology/definitions will be reconciled in the complete "knitted" version of the MAHC.

3. *Comment:*
GLOSSARY: Delete reference to "main drain" in "hydraulically balanced" and "recirculation system" definitions and replace with the term "suction outlet." Suggest replacing ANY and ALL references to "main drain" in the MAHC with the term "suction outlet" and define "suction outlet" as follows: "SUCTION OUTLET" means a submerged fitting, fitting assembly, cover/grate, and related components that provide a localized low-pressure area for the transfer of water from a swimming pool, spa, or hot tub. Submerged suction outlets have also been referred to as main drains. -- The language being proposed as the definition for suction outlet comes directly from APSP-16 and since APSP-16 uses the term suction outlet and this standard is recognized as the successor standard in the VGB by the CPSC, this term should be used in all swimming pool codes rather than the outdated and incorrect term "main drain." By replacing all references to "main drain" with "suction outlet" and replacing any corresponding definition found in another MAHC module for "main drain" with the definition of "suction outlet" consistency is being achieved between all codes and standards. The term "suction outlet" is the recognized term by the CPSC (with VGB & APSP-16), the industry and code officials – it is used in the ISPSC and ANSI/APSP Standards. That being said, this recommendation does provide in the suction outlet definition that they have also been referred to as "main drains," following what was provided in the 2015 ISPSC – to ensure anyone using the outdated term makes the

connection to this new and widely used and understood term. It is interesting to note that in 4.7.1.1.3 the term "suction outlets" is used instead of "main drain" and 4.7.1.6 is titled "submerged suction outlet." There may be additional sections in other modules that also use suction outlet – suggest making it consistent throughout the MAHC. – **REFERENCE:** APSP-16 uses this term and definition; ISPSC 2012 edition uses suction outlet term & 2015 edition will include this exact definition of "suction outlet" (see SP10-13 ISPSC 2015 proposal); and the CPSC, under the VGB, recognize APSP-16 as THE suction fittings standard (not drain cover standard).

Changes to Module/Annex:
Partially agree. The appropriate and consistent use of terminology has been addressed.

4. *Comment:*
GLOSSARY: "Water Replenishing System" means a way to remove water from the pool as needed and replace with make-up water to maintain water quality. GENERAL COMMENT: why does this definition say a "water replenishment system" is a means of removing water from the pool?

Changes to Module/Annex:
Disagree. Water removal is part of the replenishment system.

5. *Comment:*
4.7.1.2.3 – 4.7.1.2.3 Each component aquatic venue of a combined venue treatment system shall be capable of being isolated for maintenance purposes. –It is not clear to me whether "component" refers to individual aquatic venues within an aquatic facility (e.g. spa, pool, spray pad, etc.) or whether it refers to individual pieces of equipment (e.g. pump, filter, etc.). If it is the former, then suggest that the word "component" be replaced with "aquatic venue."

Changes to Module/Annex:
Agree. Code revised.

6. *Comment:*
4.7.1.3.1.5 – 4.7.1.3.1.5 Inlets shall be hydraulically sized to provide the design flow rates for each POOL area of multi-zone pools based on the required design turnover rate for each zone. GENERAL COMMENT: Is it being suggested that certain areas of the pool should and can receive more and better treated water than other areas of the pool? Does this make it safer or less safe to swim in certain zones because of differing turnover rates?

Changes to Module/Annex:
This provides for adequate treatment of different pool areas likely receiving different contamination burden.

7. *Comment:*
4.7.1.3.2.1 – 4.7.1.3.2.1 Floor inlets shall be uniformly spaced and flush with the bottom of the POOL. GENERAL COMMENT: It says that floor inlets shall be uniformly space. Would this be true in 3 feet of water and also in 12 feet of water within the same aquatic vessel? How can this produce water that is uniformly treated water throughout the pool?

Changes to Module/Annex:
Partially agree. Code revised.

8. *Comment:*
4.7.1.3.2.1.2 -- 4.7.1.3.2.1.2 Rows of inlets shall be within 15 feet (4.6 m) of each any side. -- Current language would require floor inlets to layout in a triangular arrangement and not in a checkerboard style.

Changes to Module/Annex:
Partially agree. Code revised.

9. *Comment:*
4.7.1.3.2.2 -- 4.7.1.3.2.2 Floor inlets, used in combination with wall inlets, shall be spaced no greater than 25 feet (7.6 m) from adjacent side walls any wall. -- Does the term "adjacent side walls" mean two walls that are 90 degrees to each other or parallel to each other? Do they not mean end wall to side wall? If that is the case then the words "adjacent side walls" should be deleted and replace with "any wall".

Changes to Module/Annex:
Agree. Replaced "Adjacent" with "nearest".

10. *Comment:*
4.7.1.3.3.3 & 4.7.1.3.3.5 – 4.7.1.3.3.3 Inlets shall be directionally adjustable. 4.7.1.3.3.5 Wall INLETS that are not part of a manufactured gutter system shall be designed to provide directional flow. – 4.7.1.3.3.3 and in 4.7.1.3.3.5 seem to be redundant. 4.7.1.3.3.5 could be deleted.

Changes to Module/Annex:
Partially agree. Code revised.

11. *Comment:*
4.7.1.3.3.4.2 – 4.7.1.3.3.4.2 Inlets shall be placed in each recessed or isolated are of the POOL. GENERAL COMMENT: Does it mean that wall inlets must be place within recessed ladders?

Changes to Module/Annex:
No. Info added to annex to address intent for this section.

12. *Comment:*
4.7.1.3.3.6 - 4.7.1.3.3.6 New and renovated RECIRCULATION SYSTEMS shall be subjected to Dye testing shall be required to evaluate the mixing characteristics of the RECIRCULATION SYSTEM unless exempted by the local AHJ. -- This suggested rewording, which is similar to what is used in 4.7.1.7.5.1, is so the language is specifying how often dye testing needs to be conducted.

Changes to Module/Annex:
Partially agree. Code revised.

13. *Comment:*
4.7.1.3.3.6.2 – 4.7.1.3.3.6.2 If dye test reveals inadequate mixing in the POOL after 15-20 minutes, the RECIRCULATION SYSTEM shall be modified to assure adequate mixing. -- If the test can go to 20 minutes then why even suggest 15 minutes? Delete the range and make it 20 minutes only.

Changes to Module/Annex:
Agree. Code revised.

14. *Comment:*
4.7.1.4.1.2 – 4.7.1.4.1.2 Zero-depth entry POOLS shall have a continuous overflow trench that terminates as close to the side walls as practical. GENERAL COMMENT: It seems to imply that there is a trench that needs to terminate close to the side walls. There is not trench along the entrance end of the pool or it would not be a zero-depth entrance. Does this mean that the gutter/trench on the sides of this pool needs to terminate as close as practical to the zero-depth entry end of the pool?

Changes to Module/Annex:
Code revised for clarity.

15. *Comment:*
4.7.1.5.1.4 -- 4.7.1.5.1.4 At least two skimmers placed on different sides of the pool shall be provided to reduce the impact of prevailing winds on removing CONTAMINANTS from the surface of the POOL. -- Although it is probably obvious that two side-by-side skimmers will not reduce the impact of prevailing winds, it might be good to specify that the skimmers should be placed on different sides of the pool.

Changes to Module/Annex:
Partially agree. Code revised to delete minimum number but address effects of

prevailing wind.

16. *Comment:*
4.7.1.6.1 – 4.7.1.6.1.1 Submerged suction outlets, including sumps and covers, shall conform to the requirements of ASME/ANSI A112.19.8 ANSI/APSP-16. –The CPSC voted unanimously to adopt the ANSI/APSP-16 Suction Fitting Standard as the successor standard to the ASME/ANSI A112.19.8 Standard. This went into effect on September 6, 2011. Therefore, the ASME Standard is "retired" and it is imperative the MAHC reference the standard that is required to be met by federal law via the VGB Act. – **REFERENCE:** APSP-16; VGB Act; and ISPSC

Changes to Module/Annex:
Agree. Code revised.

17. *Comment:*
4.7.1.6.2 – 4.7.1.6.2 Number and Spacing

- 4.7.1.6.2.1 Where submerged suction outlets are installed, there shall be a A minimum of two suction outlets, HYDRAULICALLY BALANCED outlets are required in the bottom at the deepest level.
- 4.7.1.6.2.2 Outlets shall be equally spaced from the POOL side walls.
- 4.7.1.6.2.3 Where two or more suction outlets are present, the Outlets shall be located no less than 6 3 feet (1.8 0.9 m) apart, measuring between the center lines of the drain covers points of the outlets or located on two different planes.
- OR
- Consider replacing this section and any other sections addressing suction entrapment with the following:
- Suction entrapment avoidance for pools and spas shall be provided in accordance with APSP 7.
- Exception: Portable spas and portable exercise spas listed and labeled in accordance with UL 1563 or CSA C22.2 Na. 218.1. ---

This section poses two major concerns: 1) requiring suction outlets (formerly known as main drains) and 2) requiring a maximum spacing of 6 feet between drains. In either case there appears to be no rationale, data or empirical evidence to support the need for suction outlets (drains) or the 6 feet separation.

Whereas when it comes to allowing for pools without suction outlets (drains) and providing for a minimum 3 feet separation when installing suction outlets or having them located on different planes - there has been rationale and data to support these allowances, which are now found in the following:

The CPSC, per the VGB Act – allows for pools without drains or drain disablement and the CPSC in their guidance documents and FAQs clearly says suction outlet cover centers must be at least 3 feet apart (measured center to center), or located on different planes.

The ANSI/APSP 7 Suction Entrapment Avoidance Standard, which was adopted into the IRC and IBC in their 2009 editions and the 2012 ISPSC. This standard is consistent with the VGB Act.

As already noted, the ISPSC requires compliance with ANSI/APSP-7, which allows for a "drainless" pool and requires at least 3 feet separation or different planes when outlets are installed. The 2015 ISPSC, per the updated editions of ANSI/APSP-7 and ANSI/APSP-1 (public pool standard) will prohibit drains/suction outlets in wading pools, eliminating the hazard altogether.

See attached the 2009 Case Study on The Option of Pools without "Main Drains."

The 3 feet separation is based on proven inability of one bather to block both outlets. See attached the evidence that supports the 3ft separation claim found in the APSP-7 and in the CPSC VGB information – a Bill Rowley dual drain test study conducted in 1997 for the NSPF. Mr. Rowley presented this before the CPSC in the late 90's. – **REFERENCE:** 2012 and pending 2015 ISPSC (current MAHC provisions conflict with the ISPSC); ANSI/APSP-7; CPSC/VGB Act; APSP Case Study on The Option of Pools without "Main Drains'; and Bill Rowley dual drain test study

Changes to Module/Annex:
Partially agree. Separation distance changed to 3 feet.

18. *Comment:*
4.7.1.6.4.1 & 4.7.1.6.4.2 – 4.7.1.6.4.1 The main drain suction outlet system shall be designed at a minimum to handle recirculation flow of 100% of total design recirculation flow rate if a single main drain suction outlet is blocked. 4.7.1.6.4.2 The main drain suction outlet system shall be equipped with a proportioning valve(s) to adjust the flow distribution between the main drain suction outlet piping and the surface overflow system piping. -- Per earlier comments, changing "main drain" to "suction outlet" for consistency with APSP-16, VGB Act, ISPSC, etc. However, this section also needs additional changes to account for flow distribution and control in a pool without suction outlets.

Changes to Module/Annex:
Partially agree. Code revised to use term "outlet". Disagree with changing main drain to " suction outlet" as some main drain outlets are designed to operate under gravity, not suction.

19. *Comment:*
4.7.1.7.3.1 & 4.7.1.7.3.4 – 4.7.1.7.3.1 Provisions shall be made for expansion and contraction of pipes due to temperature variations. 4.7.1.7.3.4 Provisions shall be made for expansion and contraction of pipes due to temperature variations. -- 4.7.1.7.3.4 is a repeat of 4.7.1.7.3.1 – deleted the repeated section as it is not needed.

Changes to Module/Annex:
Agree. Code revised to eliminate duplication.

20. *Comment:*
4.7.3.2.2.2 & 4.7.3.2.2.2.1 – 4.7.3.2.2.2 All CHLORINE dosing and generating equipment including erosion feeders shall be sized to provide the following minimum dosage:

1) Outdoor POOLs (unstabilized): 1.25lbs/day/FAC/10,000 gals. of POOL water.

2) Indoor POOLs: 1.0 lbs FAC/day/FAC/10,000 gals. of POOL water.

4.7.3.2.2.2.1 Feed equipment serving high use facilities such as water parks and high use health club facilities shall be sized to provide the following minimum dosage:

1) Outdoor (unstabilized): 2.7lbs/day/FAC/10,000 gals. POOL water

2) Indoor: 1.25lbs/day/ FAC/10,000 gals. POOL water

--- Recommend changing the unit format from 1.0lbs/day/FAC/10,000 gals. of POOL water to 1.0 lbs FAC /day/10,000 gals. of POOL water. Reason for doing so is that in the former notation it appears that the Lb/day rate is divided by the FAC. (FAC in the pool in PPM? Clearly not. %FAC in product: possibly. The math would work out in this case for chemical products. However this would not then be general enough to apply to chlorine generating equipment alluded to in the initial paragraph of the section.) Thus a division by FAC is clearly not intended in this case and the expression should not be written in such a way as to create such confusion. An additional consideration - should there be minimum requirements for outdoor stabilized pools?

Changes to Module/Annex:
Agree. Code revised.

21. *Comment:*
4.7.3.2.3.1 – 4.7.3.2.3.1 All chemical adjustment feeders shall be positive displacement type such as diaphragm or peristaltic, or based on vacuum suction type such as venturi. – There seems to be a discrepancy between 4.7.3.2.3.1 and 5.7.3.2.7.4 – the latter allows feeding chemicals via venturi (i.e. suction). To be consistent added wording to this section to reflect what is allowed in 5.7.3.2.7.4. Note that if the limitation in section 4.7.3.2.3.1 was intended to apply only to feeders of concentrated liquid chemicals (such as bleach or muriatic acid) and not all chemical adjustment feeders - the glossary does not include a specialized definition of “chemical adjustment feeder”, so the reader is left to conclude that a “chemical adjustment feeder” is any chemical feeder of any type used to adjust chemical balance or concentrations in the treated water. The positive displacement requirement is addressed redundantly in section

4.7.3.2.7.1, except that there it is clarified that the reference is to “Liquid solution feeders”.

Changes to Module/Annex:
Agree. Section 4.7.3.2.3 has been deleted.

22. *Comment:*
4.7.3.2.9.2 -- 4.7.3.2.9.2 Approved substances for PH adjustment shall be Muriatic (Hydrochloric) Acid, Sodium Bisulfate, Carbon Dioxide, Sulfuric Acid, Sodium Bicarbonate and Soda Ash. – Sodium bicarbonate should be added to the list of chemicals approved for pH adjustment. Although it is primarily used for alkalinity adjustment, it can be used to raise the pH.

Changes to Module/Annex:
Agree. Code revised.

23. *Comment:*
4.7.5.1.1 – 4.7.5.1.1 Spas shall conform to the design, operation, and maintenance requirement of POOLs except as required below.
GENERAL COMMENT: Exceptions may also be needed for small spas; however more research/input is needed to determine what size limit to use for these exceptions.

Changes to Module/Annex:
Commenter did not propose a change. The MAHC affords the opportunity for the AHJ to issue a variance, upon request , to a requirement of the code.

24. *Comment:*
5.7.3.1.3 – 5.7.3.1.3 Whenever required by the manufacturer, chemicals shall be diluted (or mixed with water) prior to application and as per the manufacturer’s directions.
GENERAL COMMENT: As a follow up to this section on pre-dilution of chemicals, it might be a good idea to have a subsection forbidding the dilution of more than one chemical at a time in the same (limited volume) dilution water. Manufacturers’ directions would also caution against chemical mixing, but in view of the number of accidents per year that result from chemical mixing at aquatic venues, providing the warning explicitly in the model code might be prudent.

Changes to Module/Annex:
Agree. Code revised.

25. *Comment:*
5.7.5.3 – 5.7.5.3 The backwash rate of sand filters shall be adjusted to match the temperature of the water used for backwashing.
GENERAL COMMENT: This statement is unclear. How can a rate be adjusted to match a temperature?

Changes to Module/Annex:
Agreed. Section deleted.

16) Robert Rung, Hayward Pool Products (New Jersey)

1. *Comment:*
Glossary, 4.7.1.3.1.1, & 4.7.1.6.2.1 – **"Hydraulically ~~balanced~~ <u>apportioned</u>**" means both the relative difference between the water flow over the gutter or through the skimmers compared with the water flow through the ~~main drain~~ <u>suction outlet</u>; and the even distribution of treated water returned to different areas of the pool through the inlets. 4.7.1.3.1.1 The RECIRCULATION SYSTEM shall be designed with sufficient flexibility to achieve a HYDRAULIC ~~BALANCE~~ <u>APPORTIONMENT</u> that will ensure the following: 1) Effective distribution of treated water, and 2) Maintenance of a uniform disinfectant residual and pH throughout the AQUATIC VENUE. 4.7.1.6.2.1 A minimum of two HYDRAULICALLY ~~BALANCED~~ <u>APPORTIONED</u> outlets are required in the bottom at the deepest level. --- The "hydraulically balanced" definition conflicts with previous usage, where it meant equal flow resistance of two similar elements. The present definition will typically be understood to mean EQUAL FLOW RATE through the various paths, which is CONTRARY to the intent of this document. The term should be "hydraulically apportioned." Where the "hydraulically balanced" term is used within the MAHC, such as 4.7.1.3.1.1 & 4.7.1.6.2.1, it should be changed to "hydraulically apportioned." In addition, the obsolete term "main drain" should be replaced by "suction outlet" to conform to all recent standards and the current CPSC usage. One could use the parenthetical form "suction outlet (formerly called main drain)" or tie in under a definition for "suction outlet" the fact it was formerly called a main drain. --- **REFERENCE:** APSP-16; CPSC – VGB successor standard

Changes to Module/Annex:
Agree. Code revised.

2. *Comment:*
4.7.1.1.3 -- 4.7.1.1.3 A water RECIRCULATION SYSTEM consisting of one or more pumps, pipes, return INLETS, suction outlets, vented reservoirs, filters, and other necessary equipment shall be provided. --- A vented reservoir can be a part of a recirculation system and therefore should be included in this definition. Per ANSI/APSP-7 a vented reservoir is defined as: A receptacle or container incorporated as part of a circulation system that is vented to atmosphere and receives water from the

pool/spa or water feature by force of gravity, from which the pump draws its water supply. Systems including vented reservoirs are commonly referred to as gravity flow systems, gravity feed systems or gravity drainage systems. Vented reservoirs include but are not limited to the following: catch pools or catch basins, surge tanks, collector tanks, skimmers open to atmosphere, atmospheric vent pipe tees, gutters, overflow gutters, or perimeter gutter systems.

Changes to Module/Annex:
Partially agree. Included "tanks" as part of the recirculation system.

3. *Comment:*
4.7.1.5.4.1 -- 4.7.1.5.4.1 Each skimmer shall have a weir that adjusts automatically to ~~variations~~ a total range in water level of at least 4 inches (10 cm). -- As written, it could be misinterpreted to mean +/- 4 inches –the proposed change clears up any confusion.

Changes to Module/Annex:
Agree. Code revised.

4. *Comment:*
4.7.1.6.3.1 -- 4.7.1.6.3.1 Where gravity ~~drains~~ outlets are used, the ~~main drain~~ suction outlet shall be connected to a surge tank or balance tank/pipe. -- The term “drain” should be used for drain to waste. In order to conform to all current pool standards, and standard technical usage drain should be replaced with outlet and main drain with suction outlet (as noted in earlier comment). This correction should be made throughout this module and all other modules. – **REFERENCE:** APSP-16, APSP-7, etc.

Changes to Module/Annex:
Partially agree. Code revised to use term "outlet". Disagree with changing main drain to suction outlet in this section as it specifically addresses gravity outlets which are not under suction.

5. *Comment:*
4.7.1.6.4.2 -- 4.7.1.6.4.2 The ~~main drain~~ suction outlet system shall be equipped with a single proportioning valve~~(s)~~ in the trunk line leading to the vented reservoir or pump to adjust the flow distribution between the ~~main drain~~ suction outlet piping and the surface overflow system piping. – As written, one valve could be shut off, leaving a single outlet, which could cause an entrapment.

Changes to Module/Annex:
Partially agree. Code revised.

6. *Comment:*
4.7.1.7.1.1 – 4.7.1.7.1.1 RECIRCULATION SYSTEM piping shall be designed according to accepted engineering practices. GENERAL COMMENT: "Accepted engineering practice" for plastic piping, according to the trade organization, is 5 fps, based on testing and experience. That is lower than commonly used in pools.

Changes to Module/Annex:
Agree. Section deleted.

7. *Comment:*
4.7.1.7.2.2 – Gravity piping shall be sized with velocity of no less than 2 feet (0.6 m) per second to prevent particles settling inside pipes. GENERAL COMMENT: It is impossible to meet this requirement along with the requirement that two outlets be provided, each of which can supply 100% of the system flow rate, and also allow a majority of the flow to normally come through skimmers.

Changes to Module/Annex:
Agree. Code revised to delete gravity pipe flow velocity restriction of 2 fps.

8. *Comment:*
4.7.1.7.3.2 – 4.7.1.7.3.2 Provisions shall be made for gravity drainage of all POOL piping exposed to a freezing climate. GENERAL COMMENT: This is not common practice because many pools have no sewer below the lowest level, making gravity drainage physically impossible. It is more common to blow out the piping.

Changes to Module/Annex:
Agree. Code revised.

9. *Comment:*
4.7.1.7.4.2 -- 4.7.1.7.4.2 Pipes shall be marked to indicate flow direction and source <u>or destination if not apparent</u>.

Changes to Module/Annex:
Partially agree. Code revised.

10. *Comment:*
4.7.1.7.5.1 –4.7.1.7.5.1 New and renovated suction and supply POOL piping shall be subjected to a~~n induced~~ static hydraulic pressure test for 6 hours. -- What is the meaning of "induced"? The line should be purged of air, pressurized to a specified level, and the tested line shall be isolated by being disconnected from the municipal supply, because a leaky valve could allow continuous supply from the supply to compensate for a leak in the tested line. The pool pump cannot be used because the

test pressure must be higher than operating. Air cannot be used because it is unsafe to pressurize plastic pipe with air, and it could mask a leak.

Changes to Module/Annex:
Partially agree. Code revised.

11. *Comment:*
4.7.1.8.2.2 – 4.7.1.8.2.2 The recirculation pump(s) shall be selected to ~~provide~~ maintain the required recirculation flow in accordance with the maximum total dynamic head required by the entire RECIRCULATION SYSTEM under the most extreme operating conditions (*e.g., clogged filters in need of backwashing*).

Changes to Module/Annex:
Partially agree. Code revised.

12. *Comment:*
4.7.3.2.1.1 -- 4.7.3.2.1.1 The POOL shall be equipped with chemical feed equipment that is tested and certified by an ~~NRTL~~ ILAC approved laboratory in conformance with ANSI/NSF Standard 50. – There is no NRTL for such equipment.

Changes to Module/Annex:
Partially agree. Code revised.

13. *Comment:*
4.7.3.2.1.5.1 – 4.7.3.2.1.5.1 A clear ~~(Plexiglas) protective~~ polycarbonate cover shall be installed around chemical feed pumps to shield operating staff and equipment from potential sprays from leaking connections.

Changes to Module/Annex:
Partially agree. Code revised.

14. *Comment:*
5.7.1.1.3 – 5.7.1.1.3 For gutter or skimmer POOLs with main drains, the required recirculation flow shall be as follows during normal operation:

1) at least 80% of the flow through the perimeter overflow system and
2) no greater than 20% through the main drain.

GENERAL COMMENT: With 20% or less through two suction outlets, each rated for 100 % of the system flow rate, only 10 % of the design velocity of 6 fps or 0.6 fps will be in the piping. That is less than the minimum 2.0 fps required to prevent settling.

Changes to Module/Annex:
Agree. Code revised, the 2 fps gravity flow requirement deleted.

17) Alex Fletcher, VakPak, Inc (Jacksonville, Florida)

1. *Comment:*
4.7.1.6.4.1, 4.7.1.7.2.2, and 5.7.1.1.3 – ***Design Capacity* 4.7.1.6.4.1** The main drain system shall be designed at a minimum to handle recirculation flow of 100% of total design recirculation flow rate if a single main drain is blocked.

***Gravity Piping* 4.7.1.7.2.2** Gravity piping shall be sized with velocity of no ~~less than 2 feet (0.6 m) per second to prevent particles settling inside pipes~~ more than 3 feet (0.9 m) per second to reduce the operating pressure differential at the main drain."

***Gutter/Skimmer Pools* 5.7.1.1.3** For gutter or skimmer POOLs with main drains, the required recirculation flow shall be as follows during normal operation:
1) at least 80% of the flow through the perimeter overflow system and
2) no greater than 20% through the main drain.

BASIS FOR CHANGE: In 4.7.1.6.4.1 it states the main drain must be sized to handle 100% of the design flow. It then goes on to state in 4.7.1.7.2.2 that gravity piping shall be sized with a velocity of no less than two feet per second. Finally it states in 5.7.1.1.3 that in a gutter or skimmer pool the flow must be proportioned to 80% through the gutter and 20% through the main drain.

These are not compatible.

If you sized the main drain so that handling only 20% of the flow rate resulted in not less than 2 feet per second the resulting velocity at 100% would be approximately 10-11 feet per second and require 10-20 feet of drawdown to accomplish depending on the size of pipe. This would be almost as unsafe as a direct suction system.

For example in a 4" pipe 80 gpm flows by gravity at 2 ft/sec. and results in .81 feet of drawdown. 80 gpm is 20% of 400 gpm, which would result in 10.21 ft/sec and 16 feet of drawdown. **This would make a gravity system virtually impossible to build**.

In another example in a 6" pipe 180 gpm flows by gravity at 2 ft/sec and results in .5 ft of drawdown. 180 gpm is 20% of 900 gpm, which would result in 10.2 ft/sec and 10.11 feet of drawdown. **Again making it virtually impossible to build and almost as dangerous as a direct suction system.**

Even if you applied the 2 ft/sec minimum to 100% of the design flow it still results in more dangerous systems.

If we use our examples from before we know that water flows by gravity at 2 ft/sec in a 4" pipe at 80 gpm and at 2 ft/sec in a 6" pipe at 180 gpm. That means the water in a 4" pipe would have to flow up to 179 gpm before you upsized to the 6" inch pipe. This would result in approximately 4.6 ft/sec and 3.61 feet of drawdown (3.21Hg, 1.56psi). **Once again it is more dangerous and difficult to build.**

The number that is causing the problem here is the minimum 2 ft/sec in section 4.7.1.7.2.2 and should be stricken entirely.

The important number in sizing a gravity system is the maximum flow rate through the main drain pipe and it is not even dealt with here. That is the number that results in the maximum operating drawdown and has made Florida pools so safe for all these years. It is 3 feet per second and results in a maximum flow of approximately 115 gpm and 1.5 feet of drawdown (1.33 Hg, .650 psi) in a 4" pipe and 260 gpm and 1 foot of drawdown (.88 Hg, .433 psi) in a 6" pipe.

The other number is the maximum allowable drawdown after the main drain is covered and is being determined by the ASTM 15.51 Gravity Task Force now.

The main drain pipes in a gravity system are kept clean by the rush of water that comes when the tank is drained to be cleaned and then the valves are opened to refill it which happens 2-3 times a week and in many cases daily.

There is no need for a minimum flow rate but there is a critical need for a maximum flow rate.

4.7.1.7.2.2 should read "Gravity piping shall be sized with velocity of no more than 3 feet (0.9 m) per second to reduce the operating pressure differential at the main drain".

Changes to Module/Annex:
Agree. Code revised to delete gravity pipe flow velocity restriction of 2 fps.

18) Jim Dingman, UL, LLC (Northbrook, Illinois)

1. *Comment:*
4.7.1.5.1.1 -- The use of manufactured direct suction skimmers shall be in accordance with the manufacturer's recommendations. ~~and NSF Standard 50 certification of each skimmer.~~ Skimmers shall be certified to NSF/ANSI 50 by an ANSI-Accredited certification organization. – Requiring certification of skimmers insures that they meet all applicable health-related requirements of NSF 50. Specifying ANSI-Accredited certification organizations further insures this. – **REFERENCE:** Most codes in the US require the use of certified products, and also that they be certified by an ANSI-Accredited organization (such as UL, NSF, etc.). For example, the Uniform Codes by IAPMO, the International Codes by ICC, etc.

Changes to Module/Annex:

Agree. MAHC specifies that all equipment used or proposed for use shall be listed by NSF International, Underwriters Laboratories or another ANSI-accredited certification organization.

2. *Comment:*
4.7.1.5.4.1 -- Each skimmer shall have a weir that adjusts automatically to variations in water level of at least 4 inches (10 cm). Weirs must remain in place, and in working condition at all times. -- It is all too common for weirs to be missing. Requiring that they remain in place may help reduce the frequency of this happening.

Changes to Module/Annex:
Partially agree. Operation and maintenance aspects addressed in corresponding Section 5.

3. *Comment:*
4.7.1.7.1.3 – Piping materials ~~shall be suitable for potable water contact and~~ shall meet NSF/ANSI Standard 61 and NSF/ANSI Standard 14 as applicable, and shall be certified by an ANSI-Accredited certification organization. -- Requiring certification of piping insures that they meet all applicable health-related requirements of NSF 14 and/ or 61. Specifying ANSI-Accredited certification organizations further insures this. –
REFERENCE: Most codes in the US require the use of certified products, and also that they be certified by an ANSI-Accredited organization (such as UL, NSF, etc.). For example, the Uniform Codes by IAPMO, the International Codes by ICC, etc.

Changes to Module/Annex:
Agree. Code revised.

4. *Comment:*
4.7.1.7.4.2 -- Pipes shall be clearly marked to indicate flow direction and source. -- Add the word “clearly” for consistency with other parts of this section.

Changes to Module/Annex:
Agree. Code revised.

5. *Comment:*
4.7.1.7.4.4 -- A complete easily readable schematic of the entire POOL RECIRCULATION SYSTEM shall be openly displayed in the mechanical room or available to maintenance ~~or~~ and inspection personnel. -- Replaced “or” with “and”. Schematic shall be available to both.

Changes to Module/Annex:
Agree. Code revised.

6. *Comment:*
4.7.1.10.7.1 -- The system flowrate shall be based on maintaining a turbidity ~~goal~~ of less than 0.5 NTU in the POOL. -- Removed the word “goal”. If it is a “goal”, then mandatory language of “shall” is not necessary, and the entire section is not necessary, since it would then only be a recommendation

Changes to Module/Annex:
Agree. Code revised and wording has been revised to eliminate use of turbidimeters to monitor.

7. *Comment:*
4.7.2.1.1.4 – All filters shall be ~~currently~~ ~~listed~~ ~~in~~ certified to NSF/ANSI 50 ~~– Equipment for Swimming Pools, Spas, Hot Tubs and Other Recreational Water Facilities (or an equivalent standard).~~ by an ANSI-Accredited certification organization. -- Current wording implies that only NSF can list filters. This is not the case. Proposed wording permits certification by any ANSI-accredited certification organization.

Changes to Module/Annex:
Agree. Code revised.

8. *Comment:*
4.7.2.1.3.2 -- The granular media filter system shall be designed to backwash each filter at a rate of at least 15 gallons per minute per square foot (36.7 m/h) of filter bed surface area, unless explicitly prohibited by the filter manufacturer or their certification to NSF/ANSI 50. ~~listing. --~~Minor edit for clarity

Changes to Module/Annex:
Agree. Code revised as suggested.

9. *Comment:*
4.7.2.2.1.1 -- All precoat, filters *(i.e., pressure and vacuum*) shall be ~~currently listed in~~ certified to NSF/ANSI 50~~– Equipment for Swimming Pools, Spas, Hot Tubs and Other Recreational Water Facilities.~~ by an ANSI-Accredited certification organization. -- Current wording implies that only NSF can list filters. This is not the case. Proposed wording permits certification by any ANSI-accredited certification organization.

Changes to Module/Annex:
Agree. Code revised.

10. *Comment:*
4.7.2.2.4.3.1 -- Diatomaceous earth or perlite shall be certified to NSF/ANSI ~~Standard~~ 50 by an ANSI-Accredited certification organization. -- Revised wording provides conformity with other sections with respect to product certification.

Changes to Module/Annex:
Agree. Code revised.

11. *Comment:*
4.7.2.2.4.4.1 -- Alternate types of filter media shall be certified to ~~in accordance with~~ NSF/ANSI ~~Standard~~ 50 by an ANSI-Accredited certification organization. -- Revised wording provides conformity with other sections with respect to product certification.

Changes to Module/Annex:
Agree. Code revised.

12. *Comment:*
4.7.2.3.1 -- Cartridge filters shall be installed in accordance with the filter manufacturer's recommendations and certified to ~~with~~ NSF/ANSI ~~Standard~~ 50 by an ANSI-Accredited certification organization. -- Revised wording provides conformity with other sections with respect to product certification.

Changes to Module/Annex:
Agree. Code revised.

13. *Comment:*
4.7.3.2.1.1 -- The POOL shall be equipped with chemical feed equipment that is tested and certified by an ~~NRTL~~ ANSI-Accredited certification organization in conformance with ~~ANSI/NSF Standard~~ NSF/ANSI 50. -- Revised wording provides conformity with other sections with respect to product certification.

Changes to Module/Annex:
Agree. Code revised.

14. *Comment:*
4.7.3.2.6.1 -- Use of compressed CHLORINE gas shall be prohibited for new construction and ~~for~~ after substantial alteration/modification to existing facilities. -- Poorly worded sentence

Changes to Module/Annex:

Agree. Code revised.

15. *Comment:*
4.7.3.2.8.2 -- In-line generators shall use salt dosed through an electrolytic chamber into the POOL to introduce CHLORINE into the POOL vessel. ~~through an electrolytic chamber. --~~ Revised wording is clearer and easier to read

Changes to Module/Annex:
Agree. Code revised.

16. *Comment:*
4.7.3.2.8.7 -- The generator unit shall be UL listed ~~and conform to NSF 50 or third party testing to the NSF Standard. --~~ "Keyword" notation says "UL Approved". This is incorrect. Keyword should be "UL Certified" Also, the NSF portion does not belong here. I added a new section for it below.

Changes to Module/Annex:
Agree. Code revised.

17. *Comment:*
4.7.3.2.8.7.1 -- The generator unit shall be certified ~~UL listed and conform~~ to NSF/ANSI 50 ~~or third party testing to the NSF Standard.~~ by an ANSI-Accredited certification organization. -- Revised wording provides conformity with other sections with respect to product certification. It also addresses the issue noted in the previous code change proposal

Changes to Module/Annex:
Agree. However, change not needed as equipment certification already addressed in a previous section.

18. *Comment:*
4.7.3.2.8.10 -- Bromine generators shall be certified to NSF/ANSI 50 ~~approved.~~ by an ANSI-Accredited certification organization. -- Revised wording provides conformity with other sections with respect to product certification.

Changes to Module/Annex:
Agree. However section deleted, as equipment certification already addressed in another previous section.

19. *Comment:*
4.7.3.2.10.1 -- All chemical controllers for PH and disinfectant MONITORING/control shall ~~conform to or~~ be certified to NSF/ANSI 50 ~~listed.~~ by an ANSI-Accredited

certification organization. -- Current wording specifies NSF as the only organization that can certify these products. This is inappropriate since there are other organizations that are accredited to certify these products as well. “Keyword” needs to be changed also.

Changes to Module/Annex:
Agree. Code revised.

20. *Comment:*
5.7.2.2.3 -- Filter operation shall be per manufacturer and NSF/ANSI 50 ~~standard~~ requirements. -- Consistency and clarity

Changes to Module/Annex:
Agree. Code revised.

21. *Comment:*
5.7.2.2.7 -- Precoat filter media shall meet the filter manufacturer's recommendation for POOL use and shall be certified to ~~in accordance with~~ NSF/ANSI ~~Standard~~ 50 by an ANSI-Accredited certification organization. -- Revised wording provides conformity with other sections with respect to product certification.

Changes to Module/Annex:
Agree. Code revised.

22. *Comment:*
5.7.2.3.1 -- Cartridge filters shall be operated in accordance with the filter manufacturer's recommendation and shall be certified to NSF/ANSI ~~Standard~~ 50 by an ANSI-Accredited certification organization. -- Revised wording provides conformity with other sections with respect to product certification.

Changes to Module/Annex:
Agree. Code revised.

23. *Comment:*
ANNEX 4.7.1.5.3 -- Skimmers should provide for a flow-through rate of 30 gallons per minute (1.9 L/s), or 3.75 gallons per minute per linear inch (9.3 L/s/m) of weir, whichever is greater. The authority having jurisdiction may approve alternate flow-through rates so long as the skimmer are certified to NSF/ANSI 50 by an ANSI-Accredited certification organization, ~~NSF listed (or equivalent)~~ and manufacturer’s design specifications are not exceeded. -- Current working indicates a preference for certification by NSF. In order to insure equality for skimmers certified by an accredited body, the proposed wording is preferred.

Changes to Module/Annex:

Agree. MAHC specifies that all equipment used or proposed for use shall be listed by NSF International, Underwriters Laboratories or another ANSI-accredited certification organization.

19) Robert Nuzzi, RNEnvironmental (East Hampton, New York)

1. *Comment:*
   5.7.1.1.1 – (a) All components of the filtration and recirculation systems shall be kept in continuous operation twenty-four (24) hours per day. (b) If operation is paused for any more than routine maintenance (e.g., refreshment of required chemicals) the system, including the air jets, shall be immediately drained and disinfected. -- (a)The term "during operation" can be misinterpreted. (b)Disruption of disinfection, along with lack of circulation can result in the formation of disinfectant resistant biofilm populations, including *Legionella*. -- REFERENCE: http://www.cdc.gov/legionella/downloads/hot-tub-disinfection.pdf There are numerous papers citing the association of Legionnaires Disease with spas/hotubs.

   Changes to Module/Annex:
   Partially agree. Code revised. Short term and long term closure provisions are addressed in Facility Operation and Maintenance Module.

2. *Comment:*
   5.7.2.1.5.2 – The qualified operator shall inspect sand or other granular media filters for proper depth and cleanliness at least once per year, replacing the sand if necessary. At a minimum, the sand shall be treated with a descaling and a degreasing agent. -- Scale and biofilms can easily form on filter media if the water is not kept continually balanced. – REFERENCE: http://www.jstor.org/stable/2504

   Changes to Module/Annex:
   Agree. Code revised.

3. *Comment:*
   5.7.5.2 – SPAS shall be drained and cleaned when needed, but at least once every week. -- How does one determine "when needed"

   Changes to Module/Annex:
   Agree. Code revised for clarity.

4. *Comment:*
   5.7.5.3 – The backwash rate of sand filters shall be adjusted to match the temperature of the water used for backwashing. -- This needs clarification

Changes to Module/Annex:
Agreed. Section deleted.

5. *Comment:*
   5.7.5.5 – SPAS shall be drained and cleaned whenever needed. -- See 5.7.5.2

   Changes to Module/Annex:
   Agree. Code revised, consolidating and re- numbered.

20) Brenda Taylor, City of Hobbs Parks and Rec (Hobbs, New Mexico)

1. *Comment:*
   4.7.3.2.6.1 – Compressed Chlorine gas shall be used as long as proper training is provided and documented -- We have used gas chlorine for 20+ years without incident and don't agree with change. As long as staff is trained it is not any more dangerous than handling other chemicals.

   Changes to Module/Annex:
   Disagree. The potential impact of a failure in the system (ie. catastrophic cylinder failure/release) is far greater and more extensive than for the other acceptable pool chemicals.

2. *Comment:*
   4.7.3.2.9.2 – Sodium hydroxide shall be an approved substance for ph adjustment. -- Sodium hydroxide is no more dangerous than the use of muriatic acid and probably less so with they vapors that muriatic acid puts out. We have used soda ash before and not effective enough to keep up with the demand needed. Sodium hydroxide stabilizes the ph level much quicker and easier than soda ash without the mixing that clogs feed lines and the need to keep it mixed while dispensing

   Changes to Module/Annex:
   Disagree. Excluded on purpose due to increased risk of accidents.

21) Peter Biereis, City of Newark (Newark, California)
22) Tom Hellmann, Consumnes CSD (Elk Grove, California)

1. Comment:
4.7.1.2.2 -- The New Construction of the following increased risk aquatic venue ….. -- Remove "or substantial renovation as there is no clear definition of what this means it is too open for interpretation. A re-plaster or filter replacement could be deemed a

substantial renovation so unless there is clear understanding of what “substantial renovation it should be removed.

Changes to Module/Annex:
Agree. Definition added.

2. Comment:
4.7.1.3.3.6.2 -- If Dye test reveals inadequate mixing of the pool after 50% of the time of a normal turnover minutes then the pool is to be brought back to pre-dye conditions and a second test is to be performed to simulate minimal user conditions with agitated water with another dye test and if dye test reveals inadequate mixing of the pool after 35-30 minutes then the recirculation system shall be modified until it can pass either the standard static dye test or the simulated user dye test. -- In a static dye test there can be potential voids due to pool shell design and/or inlet placements or flow variations and or environmental factors. There is no health code requirement when pool is not in use to have chemical levels at a particular residual. Additionally, when open you will have agitation of the water and a more relevant test would be an actual or simulated in use environment. -- **REFERENCE:** NSPF Certified Pool-Spa Operator Handbook 2007 Edition pg. 101, NSPF Pool and Spa Operator Handbook 2009 pg 134.

Editoral comment: Multiple jurisdictional health codes would substantiate chemical recirculation theory in which no chemical residual is necessary in static closed conditions.

Changes to Module/Annex:
Disagree. Proper/effective mixing is essential for adequate water treatment including filtration. Absence of a disinfectant residual in a portion of the pool may result in growth of bacteria, algae and biofilm. Turnover rates to provide effective particle removal by filtration are based on consecutive dilution predicated on uniform distribution of the treated (filtered) water throughout the pool.

3. Comment:
4.7.1.5.1.6 – Eliminate Section -- Although some states have width limitations most do not. There is no logical need for this item. -- Editorial Comment: Why create a most restrictive environment when item is not needed in the code

Changes to Module/Annex:
Disagree. Many states currently limit the surface area. This requirement is based on the limits of the skimmer to effectively skim water from the surface layer from greater distances.

4. Comment:
4.7.1.5.6.1 -- Flotation Test should be performed prior to opening a facility to ensure

effective skimming and proper adjustment of flow distribution between skimmers. Periodic Flotation test should be performed -- No mention of flotation test is indicated in any of the major pool Operator handbooks nor any justification for annual re-testing -- **REFERENCE:** NRPA Certified Aquatic Facility Operator Manual 4th Edition NSPF Certified Pool-Spa Operator Handbook 2007, 2009

Editorial Comment:
Although test may be valid the efficacy of test may change in the non-static environment so functionality needs to be tested in operational use environment as that is the standard that is needed in the overall effectiveness to users.

Changes to Module/Annex:
Proper skimming is designed to remove contaminants from the surface of the pool, which is related to health and water quality. Code revised to differentiate between requirement for initial construction compliance/commissioning flotation test and operational aspect in Section 5.

5. Comment:
4.7.1.7.4.2 -- All pipes shall be clearly marked with a directional arrow as to the path of the water flow in Black in a size appropriate for easy identification based on pipe size -- A clearer more precise requirement -- Editorial Comment: If you are requiring something make it specific and easy to follow with no interpretation

Changes to Module/Annex:
Disagree. Proposed language is too prescriptive, however, code revised for clarity.

6. Comment:
4.7.1.7.4.3 -- All Valves shall be clearly marked to indicate function with clear labeling or color coding or as directed by their state building, aquatic, or fire code. -- Don't suggest color coding in annex which utilizes NSPF example which may or may not follow state jurisdictional basis – **REFERENCE:** The Design, construction, operation and Maintenance of Public Swimming Pools-excerpts from CA Health and safety code, CA code of Regulations, CA Building Code, Ca Electrical Code Need to confer with all state codes

Editorial Comment
If you are requiring something either prescribe specifics or as with my suggested change make it directed to their state code

Changes to Module/Annex:
Disagree. As indicated in the annex, the color coding table is only an example . Also, the MAHC uses performance-based language where practical, instead of being prescriptive.

7. Comment:
4.7.1.7.4.4 -- A Pool schematic of the recirculation system shall be available for maintenance or inspection personal -- Undue burden to have to put an “openly displayed” schematic on the wall and there may not be the ability to do so -- Editorial Comment: The need is to have the schematic available not to have it displayed. Although it may be nice or convenient to see it may also not be possible and to put this or that within the MAHC supersedes the intent of making a universal code.

Changes to Module/Annex:
Disagree. Commenter did not provide documentation or other rationale to support "undue burden". A posted schematic could be important for operation and troubleshooting. As an example, the diagram could be displayed on the back of the pump room door, which should not be an unreasonable burden.

8. Comment:
4.7.1.1.0 -- Adopt current CA flow rate requirements -- The recommended flow rates as listed in chart may be ideal but depending upon what gets put under the “substantial renovation 4.7.1.2.2 could make it impossible to achieve or could financially by unfeasible. -- **REFERENCE:** The Design, construction, operation and Maintenance of Public Swimming Pools-excerpts from CA Health and safety code, CA code of Regulations, CA Building Code, Ca Electrical Code

Editorial Comment: This item could be a slippery slope depending upon what is considered “substantial renovation” . You may want to tread a little lighter on suggested turnover rates. Rates listed are very aggressive and don’t match many current state code requirements.

Changes to Module/Annex:
Partially agree. Turnover rates revised.

9. Comment:
4.7.2.1.2.2 -- An easy and accessible means shall be available for any filter container for inspection and repairs. Acceptable means would be a diameter of 3’ or greater. Additionally all OSHA confined space protocol shall be adhered to in media removal. -- As currently written leaves to much interpretation of general access requirements – **REFERENCE:** OSHA 29-CFR-1910

Editorial Comment:
Most current filter vessels have extremely small access ports which do not allow functional inspection, repair, or mtc. ability except for very diminutive individuals. A systemic change is needed on the manufacturer end as these are confined space as defined by OSHA

Changes to Module/Annex:
Disagree. Where practical, the Code is written to be performance-based instead of prescriptive.

10. Comment:
4.7.3.2.7.5.1 -- Eliminate item -- Although nice idea a bit excessive and not general current practice or any regulatory code requiring this and if it was a necessity it would be built into design from pump manufacturer -- **REFERENCE:** The Design, construction, operation and Maintenance of Public Swimming Pools-excerpts from CA Health and safety code, CA code of Regulations, CA Building Code, Ca Electrical Code

Changes to Module/Annex:
Partially agree. Section deleted. Not necessary as section 4 applies to new and/or substantially altered aquatic facilities and chlorine gas systems are prohibited in new/renovated settings. Note-the 1 minute air change requirement is in some current health department pool regulations and pool operation handbooks.

11. Comment:
4.7.3.2.4.2 -- Injection to disinfection chemicals shall be after filter and heating systems on the return line to reduce and ensure the disinfectant properties or abilities of the chemicals are maintained as well as avoid corrosiveness of the chemicals on pool equipment. -- As stated does not follow current design practices or literature from major pool operator training courses -- **REFERENCE:** NSPF Certified Pool-Spa Operator course Handbook 2007 pg. 71, 2009 pg 111.

Changes to Module/Annex:
Agree. Code revised.

12. Comment:
4.7.3.2.10.2 -- Operational Manuals for cleaning and calibrating controller probes shall be available to all maintenance and inspection personnel -- Location is too specific and not always readily achievable. Need to base requirement on real world not ideal world. -- Editorial Comment based on real world realities not ideal world focus

Changes to Module/Annex:
Disagree. Commenters did not provide documentation/data to support proposed change.

13. Comment:
4.7.4.2 -- When readily achievable… then continue with current language -- This is only due to the undefined “substantial renovation” indicated 4.7.1.2.2 -- Editorial Comment:

It is impossible to know if the measurement can occur with current systems that may be forced into this code dependent on interpretation of “substantial renovation” definition/interpretation

Changes to Module/Annex:
Disagree. Measuring flow and duration during backwash is not that difficult. Substantial renovation has been defined.

14. Comment:
4.7.3.5.7 – Eliminate item or put in multiple locations-Verbiage is fine -- Should be put under not just spa area but all pool areas – **REFERENCE:** VGB act

Editorial Comment:
As it is current law do you need redundancy to put in MAHC in this section? Also applies to all drains not just spas.

Changes to Module/Annex:
Agree. Note -the code section corresponding to this comment is 4.7.5.3.7. This item deleted as it is already covered in section 4.7.1.6 Submerged Suction Outlet.

15. Comment:
5.7.1.4.5 -- Strainer baskets shall be cleaned as necessary to remove debris but not less than once a week – Not all pools need to clean daily-many indoor pools do not need to be done on a daily basis. Simply unrealistic to dictate a daily regimen that is not currently dictated by most state codes: **REFERENCES:** The Design, construction, operation and Maintenance of Public Swimming Pools-excerpts from CA Health and safety code, CA code of Regulations, CA Building Code, Ca Electrical Code

Changes to Module/Annex:
Agree. Code revised.

16. Comment:
5.7.1.5.1.1 -- Pools shall be closed for any repair which has a potential safety issue to the public or compromises the effective operational of a recirculation or sanitation system. -- Not reasonable to close for all repairs. 1 missing weir is not a necessary action to close a pool -- Editorial comment: Stated in basis for change as well as wording is crafted to reflect necessary closure elements that affect safety and operations.

Changes to Module/Annex:
Disagree. This section addresses suction outlet covers, pools shall not be open until repairs are completed.

17. Comment:
5.7.2.1 -- Add to current language "or as prescribed by filter manufacturer -- The language is based on absolute but a manufacturer may vary from what is stated so need to follow manufacturer recommendations

Changes to Module/Annex:
Disagree. However code revised to change 12 gpm/sq ft to 15 gpm/sq ft.

18: Comment:
5.7.2.1.4 -- A backwash shall occur a minimum of every 2 weeks or as recommended by manufacturer -- As currently written indicates twice a month but you could do 2 backwashes in a row and comply with item but would not satisfy the intent -- Editorial Comment: Must follow manufacturer recommendation to stay within warranty and or to avoid litigation if issue occurs.

Changes to Module/Annex:
Agree. Code revised.

19. Comment:
5.7.2.1.5.2 – Delete -- Repetitive from 5.7.2.1.5 – **REFERENCE:** MAHC 5.7.2.1.5

Changes to Module/Annex:
Partially agree. Code revised.

20. Comment:
5.7.5.2 -- Spas shall be drained and cleaned as needed -- Should not set a time parameter of 1 week etcetera it should be based around usage. factors as defined in CPO course. Also redundant with 5.7.5.2 – **REFERENCES:** NSPF Certified Pool-Spa Operator Handbook 2007 pg. 172, 2009 pg 171; MAHC 5.7.5.2

Changes to Module/Annex:
Disagree. Water replacement based on usage is also addressed however, minimum interval maintained due to documented water quality problems and outbreaks associated with spas. Code revised for clarity.

21. Comment:
5.7.5.4 – Delete -- Redundant with 5.7.5.2 and references 5.7.5.5.2 which does not exist – **REFERENCE:** MAHC 5.7.5.2

Changes to Module/Annex:
Agree. Code revised, consolidating and re- numbered.

22. Comment:
ANNEX 4.7.1.5.6 -- Under Material-need to identify size of stars to be used and efficacy between using a wooden star versus a plastic star -- Not specific enough for a test that is being required – No reference of this test within either NRPA AFO manual nor NSPF Certified Pool operator handbook 2007, 2009

Editorial Comment:
Any testing requirement has to be specific

Changes to Module/Annex:
Agree. Annex revised.

23. Comment:
ANNEX 4.7.1.7.4 -- Color coding is only example based but must meet state/local codes so if specifying must meet all state code requirements for all states -- Too specific and may not comply with current state laws or may not be specific enough to leave to interpretation for all operators – **REFERENCE:** The Design, construction, operation and Maintenance of Public Swimming Pools-excerpts from CA Health and safety code, CA code of Regulations, CA Building Code, Ca Electrical Code

Changes to Module/Annex:
Disagree. As indicated in the annex, the color coding table is only an example.

23) Paul Sisson, Michigan Dept. of Environmental Quality (Lansing, Michigan)

PREFACE FROM PAUL SISSON:

About the comments that follow, please be assured that as a member of the MAHC Facilities Design and Construction Committee, I recognize and respect the expertise of your committee and understand the time and effort that your committee members have invested in this module. I value the opportunity to comment on this draft Code and Annex and as you will see I do not take this task lightly. Please understand that I have some credentials to base my comments on. I am a licensed professional engineer in Michigan and have over 36 years of experience with the public swimming pool program in the State of Michigan, reviewing the filtration and recirculation systems for public pools. I am very familiar with writing code language that is definable and supportable.

I realize that our Michigan pool code, and many other state codes are written because “that’s the way we have always done it.” However, code language is actually developed on field observations of problems with the intent of trying to fix them by correcting the details and the language of code without creating unintended consequences. The same issues face the development of each module of the MAHC. The attempt is to compile

and boil together the best of the many pool codes available and present current research in the Annex. This should result in a model code based on science and at least the best available practice. I hope that I am open to change when presented with ongoing research, but I also warn that the MAHC should not include mandatory language for certain sections of the code when there is only ongoing research. I observe that there are a few sections in this module that are setting very aggressive and strict new requirements when the research is incomplete. I believe that the MAHC will be the industry standard of care. I however, do not wish there to be requirements in the MAHC that will place unintended consequences for hundreds of thousands of existing pools.

What follows are more than 10 pages of comments, suggestions, and questions where I struggle to understand what is being required. This does not follow exactly the comment form format because using it would likely double the size of this document. I do preface each comment with the Code or Annex section. To keep this document as short as possible, I have not reviewed the Operation and Maintenance section of the Code at all.

1. Comment:
4.7.1.2.2 -- 2) There is no definition for Therapy pools. They are alluded to in the "Increased Risk Aquatic Venue" definition, but what is a therapy pool and how are they considered as increased risk?

Changes to Module/Annex:
Agree. Definition provided in MAHC.

2. Comment:
4.7.1.3.1.2 -- "Perimeter gutter". How about "perimeter overflow system" or POS?

Changes to Module/Annex:
Agree. Changed as suggested.

3. Comment:
4.7.1.3.1.2 -- Awkward. Suggest: Effective distribution of treated water shall be accomplished by means of adjustable inlets located in the aquatic venue walls and/or floor that are adequate in design, location, and number or by inlets that are integral with a continuous perimeter overflow system. (What do you mean by "adjustable"? Flow rate adjustable? Directionally adjustable? Directional adjustability is mentioned in 4.7.1.3.3.3.)

Changes to Module/Annex:
Agree. Changed as suggested

4. Comment:
4.7.1.3.1.3 Eliminate. Combined this section into the previous section.

Changes to Module/Annex:
Agree. Changed as suggested

5. Comment:
4.7.1.3.2.1.2 Suggest: A row of floor inlets shall be located within 15 feet (4.6 m) of each side wall. What is required if the pool is round or an irregular shape?

Changes to Module/Annex:
Agree. Code revised.

6. Comment:
4.7.1.3.3.1 What does “low level recirculation” mean? I think it means you recommend deep water inlets in areas of a pool that has a water depth deeper than 10 feet. The 4.7.1.3 Annex sections for inlets do not make a case to support this as a requirement.

Changes to Module/Annex:
Agree. Section deleted.

7. Comment:
4.7.1.3.3.2 This Annex section simply indicates that the vertical range of a wall inlet is limited. Although I agree, the Annex offers no citation of evidence to back up this claim. The Annex here only “recommends” deep water wall inlets while the Code requires them by using “shall.” It is very inconsistent to require something in the Code only to waffle about it in the Annex. This happens in more than one location in the Code/Annex.

Changes to Module/Annex:
Agree. Section deleted.

8. Comment:
4.7.1.3.3.5 What is the difference between this section and 4.7.1.3.3.3? They both require that inlets be directionally adjustable.

Changes to Module/Annex:
Agree. Code revised to eliminate redundancy.

9. Comment:
4.7.1.3.3.6 Since the Annex only recommends this, how can this be a "shall" requirement? Although dye testing is a method to determine if the pool inlet system effectively distributes treated water, this can only be done after construction. What if the pool "fails"? Is the pool going to be rebuilt based on a dye test? It is critical that the design engineer and the AHJ ensure that the pool has properly located and spaced inlets BEFORE the pool is built. This test will only identify a possible problem after the fact and offers no solution. This is an operational procedure after the pool is finished and the RS & F module is not the appropriate location.

Changes to Module/Annex:
Agree. Annex revised to be consistent with Code.

10. Comment:
4.7.1.3.3.6.2 Again, is the pool going to be rebuilt on the basis of an admittedly qualitative and subjective dye test? Rebuilding is what "shall be modified" implies. Is there any science at all that ties dead spots in pools to increased risk of disease? Is there sufficient science to be prescriptive about 15 to 20 minutes? Dye testing actually should be optional.

Changes to Module/Annex:
Partially agree. Code revised.

11. Comment:
4.7.1.4 -- I suggest "Perimeter Overflow Systems / Gutters". Did the committee have any discussion about the minimum surface area of a pool when a POS would be required? I see some discussion about this in the skimmer section of the Annex, but nothing is mentioned in these code sections. The requirement is 2,400 sq ft in Michigan. Other states have 2,000 sq ft. Are there any studies that suggest POSs for smaller pools?

Changes to Module/Annex:
Partially agree. Changed to Perimeter Overflow Systems/Gutter . The requirement is based on the width of the pool (regardless of surface area) since the limitation of a skimmer appears to be based on the distance (not area) it can effectively skim. The Code limits use of skimmers to pools with a maximum width of 30 feet.

12. Comment:
4.7.1.4.1.2 What is a "continuous overflow trench"? Does this mean a gutter trench along the zero-depth portion? Suggest: For pools that require a perimeter overflow system, the POS shall extend around the entire pool perimeter including any zero-depth

portion of the pool perimeter. Where a POS cannot be continuous, the ends of each section shall terminate as close as practical to each other.

Changes to Module/Annex:
Agree. Code revised.

13. Comment:
4.7.1.4.3.2 What does "drainage" in this section mean? Does this mean the POS drop boxes, converters, and returns mentioned in the previous section? I suggest combining both sections: Drop boxes, converters, return piping, or flumes used to convey water from the POS shall be designed to prevent flooding and backflow of skimmed water into the pool and shall be designed to handle at least 125 percent of the approved total recirculation flow.

Changes to Module/Annex:
Agree. Code revised as suggested.

14. Comment:
4.7.1.4.4.2 -- How do you define the "net capacity" of the surge tank? The 4.7.1.4.4 section of the Annex on Surge Tank Capacity does not actually discuss surge tank capacity. It is discussed Annex section 4.6.1.4.2. The Annex or the Code should indicate that the net capacity means the operating tank capacity from the minimum operating depth required to maintain pump suction to the tank overflow. The Annex should also discuss how to determine the minimum operating depth of a surge tank.

Changes to Module/Annex:
Agree. Annex revised to address net capacity.

15. Comment:
4.7.1.4.4.3 Awkward. "Unoccupied pool" is not an adjective describing the surge tank. Actually, the minimum tank level should occur within a set time after everyone leaves the pool and the system reaches equilibrium. Suggest: The design professional shall define the surge tank minimum and maximum levels in the surge tank.

- Comment: Most sections stop using "perimeter gutter" as in the definition and simply uses "gutter".
- Comment: Since in-pool surge is a surge capacity consideration, the discussion of surge capacity from section 4.7.1.5.1.3 below should be moved here. This would allow the discussion of the surge weir in the skimmer section below.
- Comment: It seems that the intention of this committee is to allow in-pool surge to replace a surge tank. Even though Michigan only allows a 50% credit for in-pool surge, a section should be added under surge capacity to make the committee intensions clear that in-pool surge can replace all or part of a surge tank.

Changes to Module/Annex:
Agree. Code revised.

16. Comment:
4.7.1.4.6.1 It is certainly desirable that all pools are equipped for automatic makeup, but there is no science to support MAHC establishing this as a requirement. Manual makeup is necessary for all pools to allow the pool to be filled. Permanent piping is also necessary to prevent operators from using a hose to fill a pool. Suggest: Permanent makeup water supply equipment shall be provided to fill all pools, with automatic makeup preferred to maintain continuous skimming.

Changes to Module/Annex:
Partially agree. Code revised to require automatic make-up water supply equipment for pools with perimeter overflow systems but not for pools with skimmers.

17. Comment:
4.7.1.5 For the title of this section, is there some language that is more understandable than “alternative technologies using in-pool surge capacity?” Suggest: Skimmers and Surge Weirs

Changes to Module/Annex:
Disagree. Language is meant to be unrestrictive if new technologies become available or desirable.

18. Comment:
4.7.1.5.1.3 The language switches from “alternative technologies using in-pool surge capacity” to “hybrid systems.” I would leave the explanation of alternative/hybrid surge weir systems to the Annex. Suggest: When surge weirs are proposed in a pool equipped with a POS, the surge weirs shall meet all of the requirements for skimmers in this section.

Changes to Module/Annex:
Partially agree. Code and annex revised for clarity.

19. Comment:
4.7.1.5.1.4 This section is setting a requirement for a minimum of 2 skimmers for every pool. It seems to assume outdoor pools. What is the science behind requiring 2 skimmers in the MAHC? I have not observed small indoor pools less than 500 sq ft or indoor spas with 1 skimmer to have problems. The Annex discussion indicates that research is not available to compare skimmer effectiveness with more skimmers. Suggest: One or more skimmers shall be located to reduce the impact of prevailing

winds on removing contaminants from the surface of the pool. Or eliminate this section since skimmer location is discussed in 4.7.1.5.2

Changes to Module/Annex:
Agree. This section deleted, placement addressed in 4.7.1.5.2

20. Comment:
4.7.1.5.2.2 There is no Annex discussion here. What does “offset” mean? Does this mean that a skimmer should not be located in a recessed step area or a small recessed area? I think that one point here is that we do not necessarily want a skimmer located in a stairway area to minimize its being played with. I think we want a skimmer in a larger recessed area.

Changes to Module/Annex:
Partially agree. Code revised for clarity.

21. Comment:
4.7.1.5.5.1 I don’t think this is worded properly. This implies that each individual skimmer be level, but does not indicate that they need to be level with each other. Suggest: The base of each skimmer shall be level with all other skimmers in the pool within a tolerance of plus or minus ¼ inch (6 mm).

Changes to Module/Annex:
Agree. Code revised.

22. Comment:
4.7.1.5.6.1 The Annex lists a floatation test procedure and indicates that yellow wooden stars are to be used. What are the shape, size, and thickness of the stars? Are these readily available in a standard size and shape? I understand the need to be able to see skimmer results in a contrasting color, but why just yellow, or wood, or star shaped? Why can’t multi-colored foam dots of a certain size be used? Sorry for the sarcasm.

I recognize that this is a Code recommendation, but what changes annually to make this a recommendation? Once the pool is built, if the flow rate remains the same, the only possibility is to adjust the trimmer valves covering the skimmer suction port. This can be tested by removing the skimmer basket and sticking two or three fingers into the skimmer suction port. You can readily tell if the skimmers are getting relatively equal flow and can adjust the trimmer valves accordingly.

Changes to Module/Annex:

Agree. Annex revised to address specifications for the stars. Also, code revised to differentiate between requirement for initial construction compliance/commissioning flotation test and operational aspect in Section 5.

23. Comment:
4.7.1.6.1.1 Change ASME/ANSI A112.19.8 to ANSI/APSP-16 2011

Changes to Module/Annex:
Agree. Code revised.

24. Comment:
4.7.1.6.2.1 What about the submerged suction outlets for spa therapy pumps or other water feature pumps? There is no scientific reason to require these pumps to draw suction only from the pool bottom. I am a strong advocate of every pump needing at least 2 suction outlets, but only the filtration system pump suction needs to be at the deepest level. Then again, if there is a good way to drain the pool, and if we have the proper number of skimmers, do we really need these bottom suction fittings at all?

Changes to Module/Annex:
Agree. Code revised to clarify suction outlets for filtration system.

25. Comment:
4.7.1.6.2.3 Why is a more stringent standard being proposed in the MAHC than required by the VGB Act and ANSI/APSP-16 2011? Where does the 6 feet come from? How is this going to work for a spa? APSP-16 indicates in their section on the packaging of suction fittings that “when two or more suction fittings are used on a common suction line, they shall be separated by a minimum of 3 ft *(914 mm)*, or if any are located closer, they shall be located on two different planes (i.e., one on the bottom and one on the vertical wall, or one each on two separate vertical walls), such that it is unlikely both could be simultaneously blocked.” Another problem with this section is that there seems to be no consideration for side wall suctions for pumps other than the filtration pump.

Suggest: Submerged suctions outlets shall be located no less than 3 feet (0.9 m) apart, measuring between the centerlines of the drain covers or if they are closer, they shall be located on two different planes.

Changes to Module/Annex:
Partially agree. Code revised.

26. Comment:

4.7.1.6.3.1 What about Florida's collector tank? Suggest: Where gravity drains are used, the main drain outlets (2 are required) shall be connected to a tank that is open to the atmosphere.

Changes to Module/Annex:
Partially agree. Code revised.

27. Comment:
4.7.1.6.4.1 This is unclear. It seems like this says that a single main drain system still needs to handle 100% when the ONLY drain is blocked. Suggest: The main drain system shall be designed at a minimum to handle recirculation flow of 100% of the total recirculation flow rate with one of the drains blocked.

Changes to Module/Annex:
Partially agree. Code revised.

28. Comment:
4.7.1.7.2 Pump discharge pipe velocity and gravity pipe velocity is covered. What about pump suction pipe velocity? Michigan requires a maximum of 5 ft (1.5 m) per second for suction piping. Other states require 6 ft/sec (1.8 m/sec). In any case, it is essential to limit suction losses in piping. Therefore, the suction velocity must be less than in the pump discharge piping.

Changes to Module/Annex:
Agree. Code revised to include suction pipe velocity.

29. Comment:
4.7.1.7.2.1 The Annex indicates that the discharge pipe velocity "should" not exceed 8 ft/sec but this MAHC section says "shall." I understand the current trend toward energy conservation, but is this sufficient science to justify a MAHC requirement for not allowing higher velocities? The Annex further indicates that 8 ft/sec is a maximum value and implies that this is not a good design value. Where does this come from? For 2-inch piping, friction loss increases less than 4 psi per 100 ft of piping when the flow velocity is increased from about 6 ft/sec to about 10 ft/sec. If you have 25 feet of piping, I do not agree that a 1 psi loss justifies larger piping. This will unnecessarily increases pipe sizes. The result of larger piping will be the need to use several pipe increasers and reducers to connect to the pump, filter, and heater connections. The addition of these increasers/reducers will in many cases negate the lower friction in the larger piping. Another problem will be out of range flow meters

Changes to Module/Annex:

Partially agree. Annex revised to be consistent with code. Annex provides explanation/basis for the velocity.

30. Comment:
4.7.1.7.2.2 The Annex for this section discusses suction piping, and states a maximum 6 ft/sec requirement. The Annex discusses gravity piping in section 4.7.1.7.2.3 which is not included in the code. Suggest: Move the gravity section language to 4.7.1.7.2.3 in the code and include the Annex language for pump suction piping requirements in section 4.7.1.7.2.2.

Changes to Module/Annex:
Agree. Code revised and code and annex renumbered.

31. Comment:
4.7.1.8.1.1 This section requires all filtration pumps to have a strainer/screen device on the suction side. Why would a strainer/screen be necessary for a vacuum sand or vacuum diatomaceous filter? Since the filter is on the suction side of the pump, the filter already protects the pump and a strainer would be redundant. Suggest: All filter recirculation pumps that pump water to a pressure filter shall have a strainer/screen device on the suction side to protect the filtration and pumping equipment.

Changes to Module/Annex:
Agree. Code revised.

32. Comment:
4.7.1.8.3 I do not understand what the Annex means by “back check the flow meter.” You use the pressure/vacuum gauges and the pump curve to verify the flow meter reading. Please clarify this.

Changes to Module/Annex:
Agree. Annex revised.

33. Comment:
4.7.1.10.1 I thought the Annex for this section would have the scientific basis for the turnover times in Table 4.7.1.10. However this Annex section is a misplaced discussion of the filter backwash rate.

There is a long discussion of a new methodology (MSBL) for calculating pool flow rates in Annex section 4.7.1.10.2. In this discussion, there are two bare statements about the turnover times in Table 4.7.1.10. Since neither of these statements gives any scientific justification for MAHC to require these turnovers, I cannot support them. Since most of

these turnovers are considerably higher than required in Michigan, where do these turnovers come from? Are there multiple sources that verify these turnovers?

In my experience in Michigan, I have not observed problems with older high school pools that still run on an 8-hour turnover, but have observed problems with hotel/motel pools running at a 5-hour turnover. I agree with some of the turnovers in the table, but with limited research and references in MAHC, we will be hard pressed to go to higher flow rates and faster turnovers. The larger pumps will be an even harder to sell to the energy auditors that want filtration pumps to be shut off for long periods of time or have VFDs installed to ramp back the flow rate to a 10-hour turnover or longer during off-hours.

With only observational science involved, I have observed that hotel/motel pools do not maintain water clarity with a 5+ hour turnover required in Michigan, but apartment/condo pool do maintain clarity. We have not observed problems with wave, activity, or leisure pools with 4-hour turnovers. Although we still have no rules for spray pads, we have been following the industry standard of a 30-minute turnover and not a 10-minute turnover. Again, I would really like to see references for what MAHC is requiring in this table. Without discussion of where these requirements came from, I cannot support them.

Changes to Module/Annex:
Partially agree. Turnover rates revised.

34. Comment:
4.7.1.10.6 It is good that some specific language is incorporated into the MAHC to recognize that VFD equipped pumps can be programmed to reduce the recirculation flow rate during off hours. I see that some research has been cited to establish the maximum 25% reduction but the Annex still leaves further room to study more aggressive turndown rates. In Michigan, we have allowed programmed off-hour reductions from a 6-hour turnover to an 8-hour turnover for pools that were constructed when an 8-hour turnover was allowed, but they opted for a 6-hour turnover. The provision in MAHC for a turbidity standard and an online turbidimeter are excellent.

The next sections 4.7.1.10.7, -7.1, -7.2, and 4.7.1.10.8 are really subsections of 4.7.1.10.6. When 4.7.1.10.7 and 4.7.1.10.8 are written as main subsections of 4.7.1.10, legally they can be used to modify ANY section of 4.7.1.10. Unless these are renumbered, I believe that there will be confusion with many owners requesting 25% reductions to save energy without installing a VFD or a turbidimeter.

Changes to Module/Annex:
Agree. Re-numbered as suggested and wording has been revised to eliminate use of turbidimeters to monitor.

35. Comment:
4.7.2 Excellent Annex discussion establishing the case for slower filtration flow rates for granular media filters. However, sand filters have never been designed or marketed to remove pathogens. Slower filtration rates will be a hard sell as long as NSF 50 approves high rate sand filters to 20 gpm/sq ft. Including this discussion and the 12 gpm/sq ft requirement should be a large boost toward setting standards that are significantly better in single pass removal of human pathogens for granular media filters. (My editorial comment: I think that the dramatic increase of Cryptosporidium infection in this time period largely due to the dramatic improvement of detection and reporting and the education of the public. Crypto has always been there, perhaps with the same incidence, but health education and awareness has changed dramatically in our culture. Previous generations contracted illnesses from aquatic venues, but right or wrong suffered in silence perhaps because that was their culture. Now, no one suffers in silence. Everyone wants for find a cause and place blame.)

Changes to Module/Annex:
No change proposed by commenter.

36. Comment:
4.7.2.1.1.1 The Annex comment is good, but there is no mention of sufficient floor space in this section of the code. At least one section here needs to mention “sufficient floor space,” perhaps in 4.7.2.1.2.1. Because of the myriad of sizes and shapes, I understand the difficulty of establishing an actual floor space requirement, let alone setting an option to increase this by 50%. What would a 50% increase in space actually do? Would this space be sufficient to add another filter? Would this space be sufficient to add two smaller filters? Just looking at adding sand filters and using a simple square to determine the footprint area, you need 4 sq ft for a 24” filter, 6.25 sq ft for a 30” filter, and 9 sq ft for a 36” filter. Having an additional 50% in area does not quite provide sufficient area to add the next size filter.

Changes to Module/Annex:
Partially agree. Corresponding code section should be 4.7.2.1.2.1. Clarification-annex doesn't state that the floor size should increase by 50% ; it says sufficient floor space to accommodate increase in filter surface area by 50%.

37. Comment:
4.7.2.1.1.3 What if the backwash water is directly visible flowing into the wastewater sump? Suggest: 3) Means to view the backwash water clarity.

Changes to Module/Annex:
Agree. Code revised.

38. Comment:
4.7.2.1.1.4 NSF and other nationally recognized testing laboratories (NTRL) do not set the standard in and of themselves. They rely on funding by the industry. When the filter industry is convinced that they need to produce filters that can provide microbial reduction, then they will come to NSF to establish these standards. I don't think they are there yet.

Changes to Module/Annex:
No change proposed by commenter.

39. Comment:
4.7.2.1.3.2 I am uncomfortable with "prohibited" because it sounds like it could be illegal. Suggest: …filter bed surface area, or at a different rate as specified by the manufacturer.

Changes to Module/Annex:
Disagree. Suggested change would alter intent.

40. Comment:
4.7.2.1.6.1 I am not very clear about what this section requires for the location of the coagulant feed system. For a pressure filter, I understand that coagulant must be injected with a feed pump before the filter, but is this requiring the injection point on the suction side of the pump or the discharge side of the pump? The Annex does not clarify this either. The Annex builds a good case for coagulation, but it misses explaining the process.

Changes to Module/Annex:
Agree. Code revised for clarification.

41. Comment:
4.7.2.2 -- What does this MAHC committee assume about how and where to measure the 2.0 gpm/sq ft? I had always assumed that you would establish a precoat media filter flow rate based on the uncoated area of the support septa. This is a good assumption as long as support septa have a large surface area. However, when small diameter tubes (such a 0.5 inch diameter) are used as support, NSF 50 allows a multiplier of 1.5 to be used. This is based on the difference in diameter between the uncoated tube and the diameter of the coated tube with 0.125" of media. The larger coated surface area is used and has an effective filtration rate of 3 gpm/sq ft. There is ongoing discussion about this topic.

Changes to Module/Annex:
Code revised to provide additional detail.

42. Comment:
4.7.2.2.3.1 The Annex mentions using the pump strainer to introduce the precoat slurry. I have never run across this. How does this work? If the strainer lid is open during the process, I am not sure how the pump would keep a prime or keep from drawing a lot of air. Would the strainer seal properly after precoating? Concerning using a skimmer, besides for the problems mentioned in the Annex, precoating often makes a mess with media being dumped directly into the pool. Michigan requires a separate precoat pot on the suction side of the pump. This keeps the mess in the equipment room and avoids problems with taking the lid off the strainer while the pump is operating.

Changes to Module/Annex:
Agree. Annex revised.

43. Comment:
4.7.2.2.4.3 If you mention DE and perlite, you should also mention cellulose fiber.

Changes to Module/Annex:
Partially agree. Code revised.

44. Comment:
4.7.2.3.2 Good Annex discussion about cartridge filters, but I don't see who specifically the "consensus" is to not recommend them. The Annex still recommends 0.375 gpm/sq ft filtration rate for cartridge filters. I would rather see a stronger argument in the Annex supporting 0.3 gpm/sq ft or lower.

Changes to Module/Annex:
Agree. Annex revised.

45. Comment:
4.7.3.2.1.5.1 I have not seen a protective cover as required in this section. Do the manufacturers supply these protective covers?

Changes to Module/Annex:
Partially agree. Code revised.

46. Comment:
4.7.3.2.2 I don't understand the tables in this section of the Annex. Some units and explanation is necessary in each table to establish a chlorine feed rate table in addition to the sample calculation.

There must be something else I don't understand because the Annex tables do not match the code requirements. Section 4.7.3.2.2.2 lists the chlorine doses (presumably for standard use) outdoor and indoor pools. Section 4.7.3.2.2.2.1 lists the chlorine doses for high use outdoor and indoor pools. The corresponding Annex tables 4.7.3.2.2.1 and 4.7.3.2.2.2 for standard use pools and tables 4.7.3.2.2.3 and 4.7.3.2.2.4 for high use pools do not match with each other or with the code. I would think that the code and each table should be consistent for the 10,000 gallon standard use pool and for the 10,000 gallon high use pool.

Changes to Module/Annex:
Agree. Code and Annex revised.

47. Comment:
4.7.3.2.2.2 The larger problem in these code and Annex sections are the very low chlorine feed rates. The old American Public Health Association and most states use a 10 ppm feed rate, which amounts to a feed rate of about 2.5 lbs Cl/day/10,000 gallons. This assumed a high bather load (high use) for all pools with 9 ppm of chlorine demand, leaving 1 ppm as a residual. This feed rate obviously produces a conservatively sized feeder, but a large feeder can be adjusted down much more easily than a minimum sized feeder can be adjusted up. I do recognize that unstabilized outdoor pools use more chlorine than an indoor pool does. I would suggest that all outdoor pools be at the 2.7 lbs Cl/day rate from section 4.7.3.2.2.2.1, and indoor pools would be around 1.67 – 2.0 lbs Cl/day.

Changes to Module/Annex:
Partially agree. Code and annex revised.

48. Comment:
4.7.3.2.2.2.1 I do not agree with having a high use table because a designer cannot effectively predict what facilities will actually be high use. The list in this section only mentions water parks and health clubs. If a facility type is not mentioned here in the code, then an owner could argue that they are not high use. I would add hotels and motels to this list because they usually have high bather loads on weekends and often run cloudy at that time. I suggest that if this section is retained with higher feed rates, that the facilities mentioned in the section be moved to the Annex and a discussion be included in the Annex about what types of facilities are more likely to be high use.

Changes to Module/Annex:
Agree. Code revised, high-use requirements section deleted.

49. Comment:

4.7.3.2.3.1 I don't understand what is meant by this section. This seems to exclude erosion feeders and perhaps electrolytic chlorine generators. Without any Annex discussion or research that invalidates erosion feeders or EC generators, I do not agree with this section. This needs to be reconciled with sections 4.7.3.2.7.2 and following of the code which has basic requirements for dry chemical feeders.

Changes to Module/Annex:
Agree. Section 4.7.3.2.3 has been deleted.

50. Comment:
4.7.3.2.4.2 I cannot agree with the way this requirement is written. Requiring disinfection prior to the filter would void the warranty of just about all heaters. Suggest: The injection point of disinfectant chemicals shall be located before any pH control chemical injection point with sufficient physical separation of the injection points to reduce the likelihood of mixing these chemicals in the piping during periods of interruption to recirculation system flow. All electrically operated chemical feed equipment shall be interconnected and energized with the filtration pump.

Changes to Module/Annex:
Agree. Code revised.

51. Comment:
4.7.3.2.5.1 Is the intention of this section to require chemical controllers for all pools? I would like to see this as a requirement, but there are many pools out there that operate very successfully without them.

Changes to Module/Annex:
Yes, controllers required for all new or substantially renovated venues.

52. Comment:
4.7.3.2.6.1 I completely agree. We haven't allowed chlorine gas in Michigan for 30 years.

Changes to Module/Annex:
Commenter did not propose a change.

53. Comment:
4.7.3.2.7.1 This Annex section on UV should be renumbered 4.7.3.7.2.7 as in the code section.

Changes to Module/Annex:
Agree. Annex revised/re-numbered.

54. Comment:
4.7.3.2.7.1.1 What does “locally adjusted” mean? What is intended by allowing timers to adjust feed rates? I can envision an owner installing a timer (locally) which shuts off the feeder for 12 hours every day like a lamp in your living room. I can agree with the timers that are built into some feeders that adjust the number of minutes per hour that the feeder that runs, but I cannot agree with a timer that allows feeder shut off times of more than an hour.

Changes to Module/Annex:
Agree. Code revised.

55. Comment:
5.7.3.2.7.5.2 I think this section should be numbered 4.7.3.2.7.3.2. Does this mean that the intake of the erosion feeder be connected on the discharge side of the filter? Most manufacturers have the erosion feeder intake on the discharge side of the pump and the outlet after the filter and heater.

Changes to Module/Annex:
Commenter cites section 5.7.3.2.7.5.2 however, there is no corresponding number in the code.

56. Comment:
4.7.3.2.8.5.1 Where is the science behind requiring 4.5 lbs Cl/day/10,000 gal for an electrolytic chlorine generator? This is 3.6 to 4.5 times more Cl than required for an indoor pool under

Changes to Module/Annex:
Agree. Code revised.

57. Comment:
4.7.3.2.2. The manufacturers are touting sizing at around 0.4 lbs Cl/day /10,000 gal. I don’t buy this, but I also strongly disagree with the feed rate for ECGs in this section. What is the difference between a peristaltic chemical feeder that feeds 2.0 lbs Cl/day and an ECG that produces 2.0 lbs Cl/day? Nothing at all. Except that the salt feeder generated the chlorine in the pool, which is a more efficient process than adding a chemical. Suggest: An ECG shall be capable of feeding a chlorine dosage equivalent to the feed rates in sections 4.7.3.2.2.2 or 4.7.3.2.2.2.1.

Changes to Module/Annex:
Agree. Code revised.

58. Comment:

4.7.3.2.9.1 If pH adjustment feeders are required, are controllers required? I can't find this in the code. Should a pH feeder be installed if there is no controller?

Changes to Module/Annex:
Agree. Code specifies controllers are required for all pools.

59. Comment:
4.7.3.2.9.5 How does a designer know how to size a solution container to have a one week supply? This is highly dependent on the source water, the type of disinfectant used, bather load, etc. Put this in the Annex.

Changes to Module/Annex:
Agree. Code revised. Information moved to annex.

60. Comment:
4.7.3.2.10.5.1 The numbering for this section in the Annex is very confusing since sections …10.4 and …10.5 are not in the code. This perhaps should be 4.7.3.2.10.4. Actually, this Annex section is quite ambiguous and does not seem to refer to controllers at all. It makes no sense here or in previous sections of the code. This should be eliminated.

Changes to Module/Annex:
Agree. Code and annex has been made consistent.

61. Comment:
4.7.4.2 What does "intentionally discharging" mean? This seems to suggest draining water from the pool for the purpose of water replenishment as discussed in the Annex. This is a good idea, but I do not find a section requiring automatic water supply to resupply the water drained out. Although this is a good idea, the code should not require water replenishment when the Annex indicates that the science is not there and that the operator should experiment with replenishment rates. Suggest: … result) should be installed. Are there other reasons to measure the volume of wastewater flow from a pool?

Changes to Module/Annex:
Disagree. Admittedly, the exact amount of water to discharge is not known and will likely vary between pools (based on location, source water, bather density, temperatures, ect.). It is generally accepted that some water must be discharged to remove contaminants that will otherwise accumulate in pools over time. The starting point is a system to measure the discharge and a minimal rate to start with

62. Comment:

4.7.4.2.1 I have no idea what this section or section 4.7.4.2.2 means. Please include an Annex discussion of this.

Changes to Module/Annex:
Agree. Code and annex revised for clarity.

63. Comment:
4.7.4.2 The sections in the Annex about the wastewater air gap and precoat media discharge should be moved back to 4.7.4.1 of the Annex. Actually, the air gap requirement here conflicts with the requirements in section 4.11 of the code.

Changes to Module/Annex:
Agree. Code and annex revised.

64. Comment:
4.7.5.2.1 I oppose these turnover time requirements for spas. Although we often achieve these turnover times for spas less than 2000 gallons, is there science to back up a requirement for a flow rate of 333 gpm for a 5000 gallon spa? This spa would require a pump with a 10 hp motor and five 36-inch diameter sand filters at 10 gpm/sq ft. The pump suction and discharge piping would need to be 6” to meet the proposed pipe velocity requirements. I would suggest 0.5 hr turnover or less for spas less than 2000 gallons and 1.0 hr or less for larger spas.

Changes to Module/Annex:
Partially agree. The turnover rates for all pools including spas have been revised.

65. Comment:
4.7.5.2.2 What is the difference between this section and section 4.7.5.2.4? They both require the spa flow turnover time to be based on the filtration rate only. Delete one section.

Changes to Module/Annex:
Agree. This section deleted.

66. Comment:
4.7.5.3.1 Why is it required to have the filtration return lines independent of the therapy return lines? Although it is not very common to have them combined, the ones we have do not seem to have any problem maintaining water chemistry or clarity.

Changes to Module/Annex:
Agree. Code revised to delete this section.

67. Comment:
4.7.5.3.2 Does this section mean that two sets of suction fittings are required to separate filtration suction from therapy suction? I certainly understand that the two suction lines should not connect in the equipment room. However, if VGB requirements are followed for sizing the line between two properly sized main drains, then the filtration suction line and therapy suction line can be connected in the middle of the line between the two drains.

Changes to Module/Annex:
Agree. Code revised to delete this section.

68. Comment:
4.7.5.3.5 Does this mean the filtration inlets? Doe adjustable mean directional or flow rate adjustable or both?

Changes to Module/Annex:
Code revised. This section deleted, recirculation inlets already addressed.

69. Comment:
4.7.5.3.5.1 Does this mean that higher flow velocities are allowed for the spa filtration inlets or the therapy jets?

Changes to Module/Annex:
Code revised. This section deleted.

24) Steve Andrews, Nemato Corp. (Spartanburg, South Carolina)
25) Alvaro Mendoza, Commercial Energy Specialists (Jupiter, Florida)
26) Robert Jelinek, Badger Swimpools, Inc. (Prairie du Sac, Wisconsin)

1. Comment:
Table 4.7.1.10 –

Pool Type	**Volume (Gallons)**	**Turnover (Hours)**
Competition & Public Recreation	<200,000 >=200,000	4 5

Apartment / Condo	ALL	5
Wave	<750,000 >=750,000	3 3
Activity	<100,000 >=100,000	3 3
Catch/ Plunge	ALL	2
River & Vortex	<100,000 >=100,000	3 3
Multi-Level Play Attractions	ALL	2
Spray Pad	ALL	.5
Therapy	ALL	1
Wading	ALL	1

The proposed turnover rates are not supported by most current or proposed codes. The proposed changes will add significant cost to new facility design and construction as well as any major renovation. What scientific evidence was presented to support these changes from current or proposed changes to existing codes? – **REFERENCE:** California Codes, Florida Draft Revisions to DOH Code, Alberta Building Code, Ontario Building Code

Changes to Module/Annex:
Partially agree. Turnover rates revised.

2. Comment:
4.7.2.1.3.2 -- High-rate granular media filters shall be designed to operate at no more than 15 gpm/ft² (36.7 m/h). -- The proposed filter rates are not supported by most current or proposed codes. The proposed changes will add significant cost to new facility design and construction as well as any major renovation. To date we've seen no scientific evidence that supports 12 gpm/ft² over 15 gpm/ft² in performance. It is our opinion that no meaningful gains were demonstrated unless flow rates were reduced to 10 gpm/ft² in conjunction with a coagulant feed system. This type of change from current or proposed changes to existing codes should not be implemented without additional significant testing as well as proper filter standards development within NSF/ ANSI Standard 50. – **REFERENCE:** California Codes, Florida Draft Revisions to DOH Code, Alberta Building Code, Ontario Building Code, NSF/ANSI Standard 50

Changes to Module/Annex:
Partially agree. Code and annex revised.

3. Comment:
4.7.2.1.3.2 -- The granular media filter system shall be designed to backwash each filter at a rate of at least 15 gallons per minute per square foot (36.7 m/h) of filter bed surface area, unless explicitly prohibited by the filter manufacturer and/ or approved at an alternate rate by NSF/ANSI 50 listing – While the proposed backwash rate may be effective for sand filters with an effective size range of .45mm, there are many other types of media that require a much lower backwash rate. There are many filters in operation that utilize an air scour system or air assist that have effectively demonstrated the ability to backwash properly at lower backwash rates. This should not be a prescriptive requirement however by current NSF/ANSI Standard 50 requirements would need to be validated by a third party testing agency whether at 15 gpm/ft² or any other backwash rate. – **REFERENCE:** NSF/ANSI Standard 50

Changes to Module/Annex:
Agree. Code revised.

4. Comment:
4.7.2.2.1.2 -- Filters should be used with the appropriate filter media as recommended by the filter manufacturer for maximum clarity and cycle length providing the media is NSF/ANSI Standard 50 approved for use in the filter. -- The current silica sand requirement by NSF/ANSI Standard for granular media filters is #20 silica sand. There is a definition for #20 silica in NSF/ANSI Standard 50 and all other media will need to be individually listed to the standard or the filter will need to be tested with the alternate media. Filters installed without using proper media are technically not in compliance with the standard and would not carry the listing in that situation. – **REFERENCE:** NSF/ANSI Standard 50

Changes to Module/Annex:
Agree. Code revised.

5. Comment:
4.7.4.2.3 -- This system shall be designed to discharge (or treat and reuse) pool water at a rate of up to 4 gallons (15 L) per BATHER per day per aquatic venue. Where alternate systems are used to automatically maintain TDS levels in the water, the TDS level shall not exceed 3 cycles above the makeup water TDS. -- Ontario Health Standards currently require 20 L per BATHER per day to be discharged from the system. While this has proven to be effective there isn't really any research supporting this specific number. More recently some deviation has been allowed to monitor TDS in lieu of a specific dilution number. This has proven very effective even in pools where

Bromine is used as the primary sanitizer. While we agree with dilution being an important factor for successful operation, there doesn't really seem to be any research supporting the 4 gallon number. This could prove to be very prohibitive for drought stricken states and could lead to pool closures. – **REFERENCE:** Ontario Health Code

Changes to Module/Annex:
Disagree. TDS is not the critical issue. Total organics is very important to water and air quality. Admittedly, the exact amount of water to discharge is not known and will likely vary between pools (based on location, source water, bather density, temperatures, ect.). It is generally accepted that some water must be discharged to remove contaminants that will otherwise accumulate in pools over time. The starting point is a system to measure the discharge and a minimal rate to start with.

6. Comment:
4.7.5.2.1 – All SPA VENUES as defined in the MAHC shall comply with the following maximum allowable turnover times:

1) 0.25 hrs. for spa volumes less than 1100 gallons.
2) 0.5 hrs. for spa volumes more than 1100 gallons. -- The proposed turnover rates are not supported by most current or proposed codes. The proposed changes will add significant cost to new facility design and construction as well as any major renovation. What scientific evidence was presented to support these changes from current or proposed changes to existing codes? – **REFERENCE:** California Codes, Florida Draft Revisions to DOH Code, Alberta Building Code, Ontario Building Code

Changes to Module/Annex:
Partially agree. The turnover rates for all pools including spas have been revised.

7. Comment:
5.7.2.1.2 -- High-Rate granular media filters shall be operated at no more than 15 gpm/ft² (36.7 m/h). -- The proposed filter rates are not supported by most current or proposed codes. The proposed changes will add significant cost to new facility design and construction as well as any major renovation. To date we've seen no scientific evidence that supports 12 gpm/ft² over 15 gpm/ft² in performance. It is our opinion that no meaningful gains were demonstrated unless flow rates were reduced to 10 gpm/ft² in conjunction with a coagulant feed system. This type of change from current or proposed changes to existing codes should not be implemented without additional significant testing as well as proper filter standards development within NSF/ ANSI Standard 50. – **REFERENCE:** California Codes, Florida Draft Revisions to DOH Code, Alberta Building Code, Ontario Building Code, NSF/ANSI Standard 50

Changes to Module/Annex:
Partially agree. (Code section cited should be 5.7.2.1.1.) Code revised to change 12 gpm/sq ft to 15 gpm/sq ft.

8. Comment:
5.7.2.1.2 -- The granular media filter system shall be backwashed at a rate of at least 15 gallons per minute per square foot (36.7 m/h) of filter bed surface area. unless explicitly prohibited by the filter manufacturer and/ or approved at an alternate rate by NSF/ANSI 50 listing. -- While the proposed backwash rate may be effective for sand filters with an effective size range of .45mm, there are many other types of media that require a much lower backwash rate. There are many filters in operation that utilize an air scour system or air assist that have effectively demonstrated the ability to backwash properly at lower backwash rates. This should not be a prescriptive requirement however by current NSF/ANSI Standard 50 requirements would need to be validated by a third party testing agency whether at 15 gpm/ft² or any other backwash rate. – **REFERENCE:** NSF/ANSI Standard 50

Changes to Module/Annex:
Disagree. Air scour can occur without any flow, but it is considered best practice to fully fluidize the media after air scouring.

9. Comment:
5.7.2.1.4 -- All filters shall be backwashed at least twice per month. -- If this is going to be a requirement for granular media filters shouldn't be a requirement for precoat filters and cartridge filters? We have many filters on lightly used pools that backwash once every three weeks and have experienced not experienced any operational issues based on backwash frequency

Changes to Module/Annex:
Disagree. Additional research needed before considering similar requirements for precoat and cartridge filters.

10. Comment:
5.7.2.1.4.2.1 – If the filter is backwashed while the AQUATIC FACILITY is open to BATHERS, then one of the following two procedures shall be performed after the normal backwashing procedure is completed and prior to the filter being placed back in normal operation:

1) The filter flow shall be redirected to drain for a period of time sufficient to displace the volume of water inside of the filter or 3 minutes, whichever is greater, or
2) The filter is one of a series of filters operating in parallel that backwashes utilizing filtered water supplied by the other filters in the system.
   The backwash flow rate shall be reduced to a rate of no greater than 5 gpm/ft² (12.2 m/h) for a period of time sufficient to displace the volume of water inside of the filter.
   -- There are 1000s of granular media filter systems installed in the United States where the filter backwashes utilizing filtered water from the other filters in the system. This would be the design of choice on almost every Granular Media Filter System sold into Municipal and School pools in the California market for the past 20 years. To add

additional control complication into a system that has already proven to work reliably doesn't seem to be supported by the objective. If the filter backwashed with filtered water (as referenced in the Annex for this Section) this seems to address the concern.

Changes to Module/Annex:
Disagree. These are improved backwash protocols that help protect bathers in a pool, while the filter is being backwashed, from pathogens removed by the filter and released during the backwash procedure.

11. Comment:
5.7.2.2.1 -- The appropriate media type and quantity as recommended by the filter manufacturer shall be used providing the media is NSF/ANSI Standard 50 approved for use in the filter. -- The current media requirement by NSF/ANSI Standard for precoat filters is any type of Diatomaceous Earth or approved alternate. Other media such as Perlite will need to be individually listed to the standard or the filter will need to be tested with the alternate media. Filters installed without using NSF/ANSI approved media are technically not in compliance with the standard and would not carry the listing in that situation. – **REFERENCE:** NSF/ANSI Standard 50

Changes to Module/Annex:
Agree. Code revised.

12. Comment:
5.7.2.2.2 -- Precoating of the filters shall be required in closed loop (precoat) mode to minimize the potential for media or debris to be returned to the POOL (unless filters are NSF Standard 50 certified to return water to POOL during the precoating process). -- NSF/ANSI Standard 50 has testing protocol for filters to precoat in the filter cycle. This testing requirement is very onerous and can only be met if the pore structure in the septum material of the filter is fine enough to retain the media in a single pass. There are literally 10,000s of precoat filters, manufactured by at least 3 different manufacturers that currently carry this certification, installed around the world. The potential to pass media to the pool with a filter certified to precoat in the filter mode, is far less a risk to pass media to the pool than a filter that requires sequencing of operational valves to prevent media from passing to the pool during a closed loop precoat (septum provides barrier to media rather than relying on valve timing). This information was provided to the Chair of this Technical Committee during the drafting of this module and has already been referenced in section 4.7.2.2.3.1 of this module. – **REFERENCE:** NSF/ANSI Standard 50

Changes to Module/Annex:
Agree. Code revised.

13. Comment:

5.7.2.2.3.1 -- Flow through the filter shall not be interrupted when switching from precoat mode to filtration mode, which could result based on the order of opening and closing valves (unless filters are NSF Standard 50 certified to return water to POOL during the precoating process). -- See comment for 5.7.2.2.2 to provide explanation – **REFERENCE:** NSF/ANSI Standard 50

Changes to Module/Annex:
Agree. Code revised.

14. Comment:
5.7.2.2.7.1 -- Diatomaceous Earth (DE), when used, shall be added to precoat filters in a minimum amount of 1 to 2 pounds (0.45 to 0.91 kg) per 10 square feet of filtration surface area unless more is recommended by the filter manufacturer and the filter is NSF/ANSI Standard 50 approved for the higher precoat media dosage rate. . -- While many of the precoat filters being sold as Regenerative Media Filters have a ½" gap between the elements many do have a larger gap that would allow for a greater precoat thickness. This type of filter is really a volumetric machine where the volume of media will dictate the length of filter run. In some cases precoating with a higher media dosage rate could provide a longer filter run. This should be left to the discretion of the manufacturer providing the filter has been tested to NSF/ANSI Standard 50 with a higher precoat media dosage rate. – **REFERENCE:** NSF/ANSI Standard 50

Changes to Module/Annex:
Agree. Code revised.

15. Comment:
5.7.2.2.7.2 -- Perlite, when used, shall be added to precoat filters in a minimum amount of .5 to 1 pounds (0.23 to 0..45 kg) per 10 square feet of filtration surface area unless more is recommended by the filter manufacturer and the filter is NSF/ANSI Standard 50 approved for the higher precoat media dosage rate. -- See comment for 5.7.2.2.1 to provide explanation – **REFERENCE:** NSF/ANSI Standard 50

Changes to Module/Annex:
Agree. Code revised.

16. Comment:
5.7.2.3.3.3.3.1 – Soak the cartridge overnight in one of the following solutions:

1) Filter Cleaner/degreaser, or
2) A solution of water with 1 cup of tri-sodium phosphate (TSP), or
   1 Cup of automatic dishwashing detergent per 5 gallons of water.
   -- While we agree with the statements made with respect to cleaning cartridge filters, we question whether this should be in the Annex and not part of the actual code. Also, if

your going to state a cleaning requirement for cartridge filters shouldn't the same be done for precoat filters, both types of filters do require degreasing ?

Changes to Module/Annex:
Partially agree. However, at the present time, not all manufacturers of cartridge filters have specified recommended cleaning procedures.

17. Comment:
5.7.4.2 – A volume of water totaling at least 4 gallons (15 L) per BATHER per day per facility shall be either

1) Discharged from the system, or
2) Treated with an alternate system meeting the requirements of MAHC Section 4.7.4.2.1 and reused, or
3) Use an alternate system to automatically maintain TDS levels in water, the TDS level shall not exceed 3 cycles above the makeup water TDS.
-- Ontario Health Standards currently require 20 L per BATHER per day to be discharged from the system. While this has proven to be effective there isn't really any research supporting this specific number. More recently some deviation has been allowed to monitor TDS in lieu of a specific dilution number. This has proven very effective even in pools where Bromine is used as the primary sanitizer. While we agree with dilution being an important factor for successful operation, there doesn't really seem to be any research supporting the 4 gallon number. This could prove to be very prohibitive for drought stricken states and could lead to pool closures.

Changes to Module/Annex:
Disagree. TDS is not the critical issue. Total organics is very important to water and air quality. Admittedly, the exact amount of water to discharge is not known and will likely vary between pools (based on location, source water, bather density, temperatures, ect.). It is generally accepted that some water must be discharged to remove contaminants that will otherwise accumulate in pools over time. The starting point is a system to measure the discharge and a minimal rate to start with

18. Comment:
ANNEX 4.7.1.1 -- The hydraulic flexibility recommendation made in the section provide the recommended flow against a minimum total dynamic head of the system, which is normally at least 50 feet (15.2 m) for all vacuum filters and 70 feet (21.3 m) for all pressurized filters. A lower total dynamic head could be shown to be hydraulically appropriate by the designer by calculating the total head loss of the system components under worst-case conditions. -- This section currently differentiates between granular media/ cartridge filters and precoat filters. Precoat filters typically see the media replaced at a 12 to 15 psi pressure drop in the same manner as granular media and/ or cartridge filters. There should be no differentiation between the three technologies as the trigger point for backwashing, cleaning or media replacement is a similar pressure differential.

Changes to Module/Annex:
The comment doesn't correlate with the content of the cited Annex section.

19. Comment:
ANNEX 4.7.2.2.3.1 -- Precoating of filters is done using a recirculated slurring in filters because the slurry gradually builds up on the septum and in early stages some of the filter aid passes through. Precoat has to be introduced ahead of the filter. Simply sending the water containing diatomite or perlite out to pool instead of closed-loop recirculation or waste is would result in filter aid being deposited in the pool. The recirculation setting on a multi-port valve does not accomplish the goal of closed loop recirculation. Rather, it would return the media to the pool without passing through the filter. -- NSF/ANSI Standard 50 has testing protocol for filters to precoat in the filter cycle. This testing requirement is very onerous and can only be met if the pore structure in the septum material of the filter is fine enough to retain the media in a single pass. There are literally 10,000s of precoat filters, manufactured by at least 3 different manufacturers that currently carry this certification, installed around the world. The potential to pass media to the pool with a filter certified to precoat in the filter mode, is far less a risk to pass media to the pool than a filter that requires sequencing of operational valves to prevent media from passing to the pool during a closed loop precoat (septum provides barrier to media rather than relying on valve timing). This information was provided to the Chair of this Technical Committee during the drafting of this module and has already been referenced in section 4.7.2.2.3.1 of this module. Noticeably absent from the Technical Committee for this module, was a reasonable cross section of filter manufacturers. There was certainly one filter manufacturer on the Committee, however, there wasn't a significant amount of filter design experience from others which has led to some misconception or misinterpretation of the actual products available and how they actually operate.

Changes to Module/Annex:
Partially agree. Code revised.

26) Doug Fulham, Fulham Engineering Services (Sydney, New South Wales)

1. Comment:
TABLE 4.7.1.10 –

Pool Type	Volume (Gallons)	Turnover (Hours)
Competition & Public Recreation	<200,000 >=200,000	4 5
Apartment	ALL	5

/ Condo		
Wave	<750,000 >=750,000	3 3
Activity	<100,000 >=100,000	3 3
Catch/ Plunge	ALL	2
River & Vortex	<100,000 >=100,000	3 3
Multi-Level Play Attractions	ALL	2
Spray Pad	ALL	.5
Therapy	ALL	1
Wading	ALL	1

1. -- The proposed MAHC Table does not address the widely held notion that “water depth” has a direct relationship to the bather load that is deserving of adequate treatment.
2. It is both possible and common that two pools of equal volume will have vastly different surface area & water volume. The bather load within these seemingly similar pools could be diametrically opposed & different. Many consider that this “difference” behooves the application of different TO Rates/plant flows.
3. The MAHC quoted “Pool Type” is arguably limited & subjective, whereby it’s open to various interpretations & potential criticisms. Again, the inclusion of water depth would assist with definition of pool load and the pool type.
4. The proposed Table shows no respect to & for different & various pool types, such as indoor vs. outdoors, heated or unheated, new and or existing, variances with process treatment efficacy, type & extent of plant (with & without advanced oxidation, etc.,).
5. Definition on TO duty point seems elusive; is the required TO Rate with clean filters, dirty filters, or at an average between clean/dirty?
   One could imagine many applications (such as indoor high load privately operated Learn to Swim Pools) whereby the MAHC would be grossly deficient. The converse also applies.
   --**REFERENCES:**

- PWTAG 1999, Chapter 3, Page 19
- WA Code of Practice (October 2004, Table 4, Page 24;

- WHO, Vol 2; Box 5.1 (Page 91) and Table 5.2 (Page 92).
- NSW DoH (2013), All of Chapter 17, Page 48. With special reference to Clause 7.2.3 where a TO Rate concession is providing when using precoat filters & Clause 7.2.8 (Upgrading Older Existing Pools)

Changes to Module/Annex:
Partially agree. Turnover rates revised.

2. Comment:
4.7.2.1.3.2 & 5.7.2.1.2 -- High-rate granular media filters shall be designed to operate at no more than 15 gpm/ft² (36.7 m/h). –

1. Whilst it is commendable that an upper limit is proposed, there is ample case history to confirm that many pools can be effectively maintained when using "well-engineered" and proven granular filter, operating at average filter rate of 42m/h.
2. It's commercially naive to assume that all granular filters have equal capability. Amongst other things this can be noted with the ability maintain a level filter bed; to effectively detain solids; to provide/deliver laminar & stable water streams within the filter vessel, etc.,
3. The proposed upper limit imposes restrictions on well-made filter brands, which have extensive & successful case history.

It is conceded and accepted that slower filter rates will generally provide a higher process efficiency, which may be warranted by a particular application. This should be a consideration & a decision, made by a prequalified and experienced Designer, not a Standard. The converse also applies. – **REFERENCE:** WA Code of Practice (October 2004, Table 5, Page 30; promoting the concept that filter rate should be related to both load and application.

Changes to Module/Annex:

Partially agree. Code revised.

3. Comment:
4.7.2.1.3.2 -- The granular media filter system shall be designed to backwash each filter at a rate of at least 15 gallons per minute per square foot (36.7 m/h) of filter bed surface area, unless explicitly prohibited by the filter manufacturer and/ or approved at an alternate rate by NSF/ANSI 50 listing. – This requirement lacks the technical stipulations and qualifications that are necessary to provide value and credence.

For example, the use of "air scouring" and "shunt pulse backwashing" can effectively maintain granular filter beds (of all types) whilst using substantially lower washwater rates. Lower washwater consumption (with effective BW) is also an important & relevant environmental issue.

Ideally, the specification of “backwash efficiency” should relate to the media type & required bed expansion, according to temperature and specific gravity of the particular filter media.

The efficiency of the backwash process is THE distinguishing factor between many different filter types & brands. It is commendable some minimum standards are specified. A minimum BW rate is not necessarily the best means to achieve the MAHC intent.

Changes to Module/Annex:
Disagree. Air scour can occur without any flow, but it is considered best practice to fully fluidize the media after air scouring. Air scoured filters can backwash for a shorter duration to conserve water as suggested.

4. Comment:
5.7.2.2.2 -- Precoating of the filters shall be required in closed loop (precoat) mode to minimize the potential for media or debris to be returned to the POOL (unless filters are NSF Standard 50 certified to return water to POOL during the precoating process). – This requirement is bound to attract broad based criticism, which will deflect & detract from the technical merit and the value of the MAHC.

There is simply too much, long standing & successful case history to preclude SINGLE PASS precoating for swimming pool use. Unlike industrial applications, swimming pool treatment is founded upon Gauge & Bidwell Laws of Consecutive Dilution.

Without widespread & undisputed in-field evidence (which confirms and quantifies any potential risk during precoating) single pass precoating should be recognized & respected for its operational simplicity and its efficiency.

Despite the sales hype from some filter manufacturers, there is no guarantee that CLOSED LOOP will eliminate potential bypasses of chlorine resistant pathogens.

Furthermore, many consider close loop precoating to be a sophisticated and unwarranted imposition on Pool Operators. Practical experience also indicates that systems with closed loop precoating, often fail (& will release large quantities of collected solids & filter aid back into the pool) due to operator error & or equipment malfunction. This is a risk with a moderate to high probability.

If independent scientific evidence became available whereby “bypass” was a genuine issue, single pass precoating could conceivably be delivered during a filter to waste type cycle.
The operational benefits & the proven history of single pass precoating (in its present day form) should not be discarded in favor of closed loop precoating at this time.

Changes to Module/Annex:
Agree. Code revised.

5. Comment:
5.7.2.2.3.1 -- Flow through the filter shall not be interrupted when switching from precoat mode to filtration mode, which could result based on the order of opening and closing valves (unless filters are NSF Standard 50 certified to return water to POOL during the precoating process). -- Interruption of the filter flow to attain cake release and regeneration (of a single pass precoat filter) is a time proven, simple, & successful method for the operation of swimming pool filters. The likelihood of operational error is extremely low. As an expression of total flow, the extent of bypass is also similarly very low.

Changes to Module/Annex:
Agree. Code revised.

6. Comment:
5.7.2.2.6 -- Bumping a precoat filter shall be performed in accordance with the manufacturer's recommendations. – Due the inclusion of the word "bumping" this clause implies/infers that a BUMP type filters are MAHC recommended and or preferred. If this is the case, this Clause should go onto to say that closed loop precoating is a further function, which must be completed before placing the filter back on-line.

In order to appreciate the impost that MAHC is inflicting (with many of their proposed precoat filter requirements) it is suggested MAHC reviews the typical filter run time, which is common with "bump" type filters that typically utilize densely packed flex tubes.

With issues relating to POTENTIAL bypass during "regeneration" and "single pass precoating", it is also suggested that MAHC conducts a broad based matrix type Risk Analysis.

Our 40-years of experience indicate that both the likelihood and the consequences of bypass issues with closed loop precoating are extremely low. On this basis, the need to specify and seemingly favor closed loop precoating is without adequate justification.

Other standards and references quoted within this response, arguably address the perceived risks differently (and better) than the proposed MAHC.

Changes to Module/Annex:
Disagree. Inclusion of "bumping" is not intended to imply or infer preference or recommendation for use, it is acknowledging a type of pre-coat filter with corresponding requirements.

27) Stephen Spence, San Diego Dept. of Health (San Diego, California)

1. Comment:

GLOSSARY -- Change Spray “Pad” to Spray “Grounds” -- Commonly used including in other MAHC areas-not always a padded area. – **REFERENCE:** Other section of MAHC

Changes to Module/Annex:
Terms have been defined in different modules. Terminology/definitions will be reconciled in the complete "knitted" version of the MAHC.

2. Comment:
GLOSSARY -- Add “Water Features” means an interactive device or structure such as a water fountain, water spray, dancing water jet, waterfall, dumping bucket or shooting water cannon through which water is directed to the pool user. -- To differentiate the features from the pool (spray grounds) – **REFERENCE:** Definition from Calif Code of Regulations, Title 22.

Changes to Module/Annex:
Terms have been defined in different modules. Terminology/definitions will be reconciled in the complete "knitted" version of the MAHC.

3. Comment:
GLOSSARY -- “Perimeter Gutter System” ….. Perimeter system may be on pool sidewall or rimflow at the same level as deck -- Identify more than one system – **REFERENCE:** Calif Code of Regulations, Title 24.

Changes to Module/Annex:
Disagree. Delineation not necessary.

4. Comment:
4.7.1.3.3 -- Wall inlets five feet from skimmers -- To ensure treated water goes into pool – **REFERENCE:** State codes

Changes to Module/Annex:
Agree. Code revised.

5. Comment:
4.7.1.3.2 -- If pool is over 40 feet in width wall inlets only should not be acceptable -- Treated water will not be able to project out in the middle – **REFERENCE:** State codes

Changes to Module/Annex:
Partially agree. Code revised to require bottom inlets when the width of a pool exceeds 50 feet.

6. Comment:
4.7.1.1.4.4 -- Minimum surge tank capacity needed for spray grounds. 4000 gallon. -- Anything less becomes a sludge pit. – **REFERENCE:** California codes

Changes to Module/Annex:
Disagree. No data provided to support minimum size tank.

7. Comment:
4.7.1.4.4.4 -- Section mentions air gap or backflow prevention device. There is no backflow prevention device for wastewater. -- Not an alternative to air gap. – **REFERENCE:** Plumbing codes

Changes to Module/Annex:
Agree. This allows for an alternate if one becomes available.

8. Comment:
4.7.1.5.1.4 -- Rather than 'provided" use the word situated or located. -- Section indicates placement rather as well as provision.

Changes to Module/Annex:
Partially agree. This section deleted, placement addressed in 4.7.1.5.2

9. Comment:
4.7.1.6.2.1 -- Add to end of sentence "unless engineered without outlets" -- Pools can be designed and engineered with suction outlets for safety other than skimmers or gutters. – **REFERENCE:** California Spa & Pool Industry

Changes to Module/Annex:
.
Disagree. No data/details provided by commenter to support proposed change.

10. Comment:
4.7.1.7.1.2 -- PVC schedule 40 should be minimum pipe material -- Industry standard

Changes to Module/Annex:
Disagree. Where practical, the Code is written to be performance-based instead of prescriptive.

11. Comment:

4.7.2.1.5.1 -- Suggest adding a minimum pressure differential between influent and effluent gauge here if it is not elsewhere (10 psi?) -- Gives basis for having an influent gauge.

Changes to Module/Annex:
Disagree. No change to this section needed; pressure differential included in operation & maintenance aspects in section 5.

28) Pamela Armitage, World Wide Standards & Auditing for Walt Disney Parks & Resorts (Lake Buena Vista, Florida)

1. Comment:
GLOSSARY -- Definition of pH – delete the text “means a symbol” -- Unnecessary to define this as a symbol

Changes to Module/Annex:
Agree. Definition revised.

2. Comment:
4.7.1.2.2 -- Provide a definition in the definition section on “wading aquatic venues”. Include in the definition the use and defining features> -- With no definition provided applying the requirement is subjective

Changes to Module/Annex:
Agree. Definition provided in MAHC.

3. Comment:
4.7.1.2.2 -- Provide a definition in the definition section on “Therapy pools”. Include in the definition the use and defining features -- With no definition provided applying the requirement is subjective

Changes to Module/Annex:
Agree. Definition provided in MAHC.

4. Comment:
4.7.1.2.3 -- Move the content to the annex as a design consideration. -- Would be onerous and unnecessary in certain installations (e.g. two features in a kiddy area.)

Changes to Module/Annex:

Disagree. It is not necessary to isolate each feature only each venue.

5. Comment:
4.7.1.3.1 -- Replace the word “this” with a requirement that shall be accomplished ….. or subjugate under the subject requirement. -- There is no subject requirement. What shall be accomplished?

Changes to Module/Annex:
Agree. Code section renumbered and revised.

6. Comment:
4.7.1.3.3.6 -- This requirement is not a design requirement or a construction requirement and should be rewritten as a requirement for the design of dye testing capabilities or rewritten as a post construction test process requirement.

Changes to Module/Annex:
Partially agree. However, dye test kept in the design section as the dye test can demonstrate the conformance of the designed and constructed recirculation system with performance expectations. Failure may require adjustments or modifications to the system under the direction of the design engineer.

7. Comment:
4.7.1.4.1.1 -- OUTLETS shall be hydraulically sized to provide the design flow rates for each POOL area of multi-zone pools based on the required design turnover rate for each zone. -- This requirement may work for small recreational pools less than 30 feet in size, however for other types of pools this requirement might not be achievable and cause safety hazards.

Changes to Module/Annex:
Comment doesn't correlate with cited code section. Additionally, no rationale provided to support statement.

8. Comment:
4.7.1.4.2.1 -- This requirement is over-reaching and results in an system that is oversized from an efficiency perspective as well as a filtration/recirculation perspective and will negatively affect the function. The percentage should be backed by science that results in addressing the safety risk and providing an efficient system

Changes to Module/Annex:
Disagree. No recommended revisions or data provided to support statements.

9. Comment:
4.7.1.4.3.1 -- This requirement is over-reaching and results in a system that is oversized from an efficiency perspective as well as a filtration/recirculation perspective and will negatively affect the function. The percentage should be backed by science that results in addressing the safety risk and providing an efficient system

Changes to Module/Annex:
Disagree. No recommended revisions or data provided to support statements.

10. Comment:
4.7.1.4.4.1 -- The surge tank should be designed based on peak bather load including other features that are circulating in the pool using a standard displacement figure per person. The peak bather load should be defined by the designer /engineer.

Changes to Module/Annex:
Disagree. Bather loads are normally calculated based on surface area to prevent under designs based on lowball bather load estimates. This design requirement simply skips the conversion to bather load.

11. Comment:
4.7.1.5.2.3 -- This requirement should be deleted as wind direction is not constant, nor predictable.

Changes to Module/Annex:
Disagree. There are typically prevailing wind patterns/directions.

12. Comment:
4.7.1.5.6.1 -- This is not a requirement in current industry standards or codes. The basis for this requirement is not documented by industry experience. The requirement does not translate to mitigating risk. Therefore the requirement should be deleted.

Changes to Module/Annex:
Disagree. Proper skimming is designed to remove contaminants from the surface of the pool, which is related to health and water quality.

13. Comment:
4.7.1.7.2.1 -- A requirement for discharge recirculation velocity should only be included in this standard if it is at the bather interface and reducing risk to the bather.

Changes to Module/Annex:
Disagree. The rationale for 8 fps. is to minimize energy consumption and provide flexibility to accommodate subsequent changes in operation or renovation.

14. Comment:
4.7.1.7.2.2 -- Consider rephrasing to ensure there is no conflict with VGB which specifies 1.5 feet/second at the drain cover.

Changes to Module/Annex:
Disagree. Conflict not created, the velocity through a drain cover is dependent on the drain cover design and open area.

15. Comment:
4.7.1.7.3.2 -- Provisions shall be made for gravity drainage of all POOL piping exposed to a freezing climate when the piping is located outside a climate controlled environment -- Requirement should be rewritten for clarity that it is the location of the piping not the location of the aquatic facility. For pools that are located in a freezing climate where piping is located outside, the requirement should be rewritten to be applicable to certain climate zones.

Changes to Module/Annex:
Partially agree. Code revised.

16. Comment:
TABLE 4.7.1.10 – There are tables in APSP 1 Standard for Public Swimming Pools and APSP 9 Standard for Aquatic Recreation Facilities that have industry experience. If the industry experience is not going to be respected and used, the turnover times should be calculated looking at bather load, and the dynamics of the water (e.g. temperature of water, sprays, waves). Where anticipated bathers per gallon of water is X, factor for water temperature, etc. This needs to be more of a sliding scale based on the design peak bather load, and the volume of turn over required per person. Recommendation using standard bather load per type of venue: Spa – 15 minutes; Interactive Water Feature – 30 minutes; Wading Pool – 1 hour; Attractions and Special Pools – 2 hours; Wave Pools & River Rides – 3 hours; This considers 5 gallons of recirculated water per minute per patron

Changes to Module/Annex:
Partially agree. Turnover rates revised.

17. Comment:
4.7.1.10.5 -- SECONDARY DISINFECTION SYSTEMS (*e.g. UV or Ozone*) for SPRAY PADS shall be installed on the water line returning flow to the feature (spray pad) -- The change is to ensure the water that comes into contact with the patrons is treated.

Changes to Module/Annex:

Disagree. The intent is to treat the total tank volume.

18. Comment:
4.7.1.10.5.1 -- This might be ok for a spray pad, but is not feasible for a slide, where the bather load needs to be considered. What science is this ratio based on. Maybe add some examples including a sliding ratio.

Changes to Module/Annex:
This section only applies to spray pads. Annex discussion added.

19. Comment:
4.7.1.10.6.1 -- This is not an industry practice and turbidity is not a measure of disinfectant. This should be a performance based requirement. Due to different chlorinating system (etc. salt generators) it would be difficult to set a standard requirement for turbidity.

Changes to Module/Annex:
Disagree. This is allowing/acknowledging a performance based approach to filtration. Turnover rates are to address particle/turbidity removal through filtration based on the consecutive dilution process . Disinfectant distribution is based on dispersion and influenced by circulation within the pool but wording has been revised to eliminate use of turbidimeters to monitor.

20. Comment:
4.7.1.10.6.2 -- This is not an industry practice and turbidity is not a measure of disinfectant. This should be a performance based requirement. Due to different chlorinating system (etc. salt generators) it would be difficult to set a standard requirement for turbidity.

Changes to Module/Annex:
Disagree. This is allowing/acknowledging a performance based approach to filtration. Turnover rates are to address particle/turbidity removal through filtration based on the consecutive dilution process. Disinfectant distribution is based on dispersion and influenced by circulation within the pool but wording has been revised to eliminate use of turbidimeters to monitor.

21. Comment:
4.7.1.10.6.3 -- This is not an industry practice and turbidity is not a measure of disinfectant. This should be a performance based requirement. Due to different chlorinating system (etc. salt generators) it would be difficult to set a standard requirement for turbidity.

Changes to Module/Annex:
Disagree. This is allowing/acknowledging a performance based approach to filtration. Turnover rates are to address particle/turbidity removal through filtration based on the consecutive dilution process. Disinfectant distribution is based on dispersion and influenced by circulation within the pool but wording has been revised to eliminate use of turbidimeters to monitor..

22. Comment:
4.7.1.10.7 -- This is not an industry practice and turbidity is not a measure of disinfectant. This should be a performance based requirement. Due to different chlorinating system (etc. salt generators) it would be difficult to set a standard requirement for turbidity.

Changes to Module/Annex:
Disagree. This is allowing/acknowledging a performance based approach to filtration. Turnover rates are to address particle/turbidity removal through filtration based on the consecutive dilution process. Disinfectant distribution is based on dispersion and influenced by circulation within the pool but wording has been revised to eliminate use of turbidimeters to monitor..

23. Comment:
4.7.1.10.7.1 -- This is not an industry practice and turbidity is not a measure of disinfectant. This should be a performance based requirement. Due to different chlorinating system (etc. salt generators) it would be difficult to set a standard requirement for turbidity.

Changes to Module/Annex:
Disagree. This is allowing/acknowledging a performance based approach to filtration. Turnover rates are to address particle/turbidity removal through filtration based on the consecutive dilution process. Disinfectant distribution is based on dispersion and influenced by circulation within the pool but wording has been revised to eliminate use of turbidimeters to monitor..

24. Comment:
4.7.2.1.2.2 – What risk is this mitigating? If this requirement stays in, it should be rewritten to require the designer/engineer define the means, access type and ease of removal.

Changes to Module/Annex:
Disagree. Where practical, Code written to be performance-based instead of prescriptive.

25. Comment:

4.7.2.1.3.1 -- This requirement shall default to the manufacturer's requirements.

Changes to Module/Annex:
Disagree. Sand filters do not work at 15 or 20 gpm/sf in terms of efficient pathogen removal and protecting public health; reducing filtration rates is the first step toward addressing this problem.

26. Comment:
4.7.2.1.3.2 – This requirement shall default to the manufacturer's requirements.

Changes to Module/Annex:
Partially agree. Code revised.

27. Comment:
4.7.2.2.3.1 -- "System shall be designed such that media does not return to the pool". -- What health risk is this mitigating? Make this a performance requirement that states "system shall be designed such that media does not return to the pool".

Changes to Module/Annex:
Partially agree. Code revised.

28. Comment:
4.7.3.2.1.2 -- All chemical feed equipment shall be maintained per OSHA requirements or other federal or local chemical codes." -- Safe working condition is not defined and therefore is subjective

Changes to Module/Annex:
Partially agree. Code revised.

29. Comment:
4.7.3.2.1.3 -- "Feed equipment shall be designed and constructed from materials appropriate for the chemicals used in the system or stored in the vicinity." -- Durable construction is subjective. Materials resistant to the environment to which the parts will be subjected is also subjective as might be interpreted to include the external environment like equipment moving in the space.

Changes to Module/Annex:
This section deleted as NSF/ANSI 50 addresses materials.

30. Comment:

4.7.3.2.2.2 -- This requirement should be rewritten to a performance based requirement considering peak bather loads, gallons and strength of the chlorine created.

Changes to Module/Annex:
Disagree. Commenter did not provide suggested code language.

31. Comment:
4.7.3.2.2.2.1 -- This requirement should be rewritten to a performance based requirement considering peak bather loads, gallons and strength of the chlorine created.

Changes to Module/Annex:
Disagree. Commenter did not provide suggested code language.

32. Comment:
4.7.3.2.3.1 -- This requirement is not necessary and should be removed. The selection of chemical adjustment feeders will change as the technology changes and should be selected based on performance requirements.

Changes to Module/Annex:
Agree. Section 4.7.3.2.3 has been deleted.

33. Comment:
4.7.3.2.4.2 -- This would result in overfeeding due to the stuff residing in the filter, and would ruin the equipment in the system (e.g. uv systems, filters, heat exchangers). What health risk is this requirement mitigating?

Changes to Module/Annex:
Code revised.

34. Comment:
4.7.3.2.5.2 -- This requirement is unnecessary as an automated chemical feed control system does not work without target levels.

Changes to Module/Annex:
Disagree. Some controllers have the ability to feed based on time (as opposed to a setpoint), and others offer manual feed options.

35. Comment:
4.7.3.2.7.2 -- This is too prescriptive and might prevent use of new technologies that are developed.

Changes to Module/Annex:
Disagree. This is intended to address types of dry chemicals acceptable for use in erosion feeders. Code re-formatted/revised for clarity.

36. Comment:
4.7.3.2.7.4 -- This requirement is not necessary.

Changes to Module/Annex:
Disagree. However, code revised for clarity.

37. Comment:
4.7.3.2.7.7 -- Why does this matter, the point is that the UV system is located in the system downstream of the filters upstream of the bather.

Changes to Module/Annex:

Agree. Code revised.

38. Comment:
4.7.3.2.9.5 -- This requirement is not practical or a large venue (e.g. water park, large feature pool)

Changes to Module/Annex:
Agree. Code revised. Information moved to annex.

39. Comment:
4.7.4.2.3 -- This should not be included because although dilution is an important part of water quality it doesn't necessarily mean that there is science that substantiates this requirement. If you cannot measure number of bathers effectively than how can you require it.

Changes to Module/Annex:
Disagree. Admittedly, the exact amount of water to discharge is not known and will likely vary between pools (based on location, source water, bather density, temperatures, etc.). It is generally accepted that some water must be discharged to remove contaminants that will otherwise accumulate in pools over time. The starting point is a system to measure the discharge and a minimal rate to start with.

40. Comment:
4.7.5.3.1 -- This makes no sense as pertains to the way pools with spas are built today. Also how is the jet to be separate from the heater system.

Changes to Module/Annex:
Agree. Code revised to delete this section.

41. Comment:
5.7.1.1.1 -- Rewrite to say: "During operation with bathers all components of the filtration shall be kept in continuous operation.

Changes to Module/Annex:
Disagree. Commenter did not provide rationale and or data to support suggested change.

42. Comment:
5.7.1.1.3 -- This requirement is too restrictive and will not work for a deep wide pool. Skimmers are ineffective for pools wider than 30 feet. The balance of the systems should be accomplished through test and adjust.

Changes to Module/Annex:
Code section cited does not correspond with comment.

43. Comment:
5.7.1.4.3 -- The automatic fill system shall maintain skimmer water levels near the middle of the skimmer openings when pool filtration and recirculation system are operating -- This requirement should be implemented when pool filtration and recirc system is operating not just when unoccupied.

Changes to Module/Annex:
Agree. Code revised.

44. Comment:
5.7.1.5.1.2 – Delete this requirement as is replication of 5.7.1.5.1

Changes to Module/Annex:
Agree. Code revised, section deleted.

45. Comment:
5.7.1.8.1 -- What defines "accurate". Reword to "Flow meters shall be maintained per manufacturer's requirements."

Changes to Module/Annex:
Partially agree. Code revised.

46. Comment:
5.7.1.9.1 -- What is operated at the designed flow rates. There is no noun in the sentence.

Changes to Module/Annex:
Agree. Code revised.

47. Comment:
5.7.2.1.1 -- This requirement needs to be a performance based requirement and should be rewritten to: High-rate granular media filters shall be operated per the Manufacturer's requirements."

Changes to Module/Annex:
Disagree. However code revised to change 12 gpm/sq ft to 15 gpm/sq ft.

48. Comment:
5.7.2.1.2 -- This requirement needs to be a performance based requirement and should be rewritten to: High-rate granular media filters shall be operated per the Manufacturer's requirements."

Changes to Module/Annex:
Disagree. However code revised to change 12 gpm/sq ft to 15 gpm/sq ft.

49. Comment:
5.7.2.1.3 -- What defines "clear"

Changes to Module/Annex:
No change proposed by the commenter.

50. Comment:
5.7.2.1.4 -- What is the rationale behind this requirement? Regenerative filter media may not require any backwashing. Rewrite to a performance requirement looking at type of filter, bather load, volume , etc.

Changes to Module/Annex:
Disagree. The requirement is for sand filters only and is based on removing collected contaminants from the recirculation system and reducing the fouling of filter media in the filters. Additional research needed before considering similar requirements for precoat and cartridge filters.

51. Comment:
5.7.2.1.4.1 -- This requirement needs to be a performance based requirement and should be rewritten to: High-rate granular media filters shall be operated per the Manufacturer's requirements."

Changes to Module/Annex:
.
Agree. Code revised.

52. Comment:
5.7.2.1.4.2.1 -- The filter flow shall be redirected to drain per the manufacturer's rinsing requirements, or -- What is process to define the time sufficient to displace the volume of water inside the filter? What science is the 3 minutes base on. Rewrite to use the "manufacturer's rinsing requirements." Procedure 2 should be deleted, as it is not achievable in a multi-filter installation

Changes to Module/Annex:
Partially agree. Code revised.

53. Comment:
5.7.2.1.4.2.1 -- High-rate granular media filters shall be operated per the Manufacturer's requirements." -- This needs to be performance based requirement and should be rewritten to

Changes to Module/Annex:
Disagree. The requirement is based on removing collected contaminants from the recirculation system and reducing the fouling of filter media in the filters.

54. Comment:
5.7.2.1.5 -- "Sand or other granular media shall be inspected by a qualified person for compliance with standard ….. -- Rewrite this to: "Sand or other granular media shall be inspected by a qualified person for compliance with standard ?" Questions that needs to be answered prior to rewriting is what standard shall the sand or other granular media be inpected to? And what standards does a person meet to be qualified to perform this inspection? Note: Vast majority of sand filters are designated as confined spaces and require proper Personal Protection Equipment and permits to enter the space

Changes to Module/Annex:
Disagree. Cleanliness and depth are the standards.

55. Comment:
5.7.2.1.5.2 -- Delete as is redundant to 5.7.2.1.5

Changes to Module/Annex:
Partially agree. Code revised

56. Comment:
5.7.2.3.2 -- This requirement needs to be deleted as it could be in conflict with the Manufacturer's Recommendation

Changes to Module/Annex:
Partially agree. Code revised.

57. Comment:
5.7.3.1.4 -- All pool disinfection and pH adjustment feed equipment shall be maintained per manufacturer's requirements or other federal or local chemical codes." -- Safe working condition is not defined and therefore is subjective

Changes to Module/Annex:
Partially agree. Code revised.

58. Comment:
5.7.3.2.6.2 -- Local code will take care of this. Remove content unless the specific safety equipment and training requirements are provided in this document.

Changes to Module/Annex:
Agree. Code revised to include additional requirements.

59. Comment:
5.7.3.2.7.1 -- This requirement should be made a best practice and moved to the Annex.

Changes to Module/Annex:
Disagree. Broken/worn tubing has been identified as a significant contributing factor to inoperative feed equipment resulting in unacceptable/inadequate chlorine levels in pools where peristaltic pumps are used.

60. Comment:
5.7.4.2 -- 5.7.4.1 requires removal of water to maintain water quality. That is sufficient. This requirement should be deleted as it is prescriptive and might not meet the performance requirement of 5.7.4.1.

Changes to Module/Annex:

Disagree. Section 5.7.4.1 is the performance standard. Section 5.7.4.2 is the minimum standard, which by definition might not meet the needs of all pools and all situations.

61. Comment:
5.7.4.3 -- This requirement should be deleted. It is not practical as there is no way to determine how many bathers have gone into each venue in a water park.

Changes to Module/Annex:
Disagree. The requirement is based on 4 gallons per bather per day per facility. The intent is that all of the water should not be wasted from a single venue in a multi-venue facility. While exact numbers are not required, some venues are clearly more popular than others and should get more fresh water.

62. Comment:
5.7.5.4.2 -- This requirement is not practical as there is no way to know how many people when into a spa throughout the day.

Changes to Module/Annex:
Partially agree. However, no change, calculation is based on average number of users/day.

63. Comment:
5.7.5.5.1 -- What are the requirements that determine when it is needed?

Changes to Module/Annex:
Agree. Code revised for clarity.

64. Comment:
4.7.3.2.2.2.1 -- Don’t know the effective percentage of chlorine that you would put in as it would be different for different chlorine system. Feed rate will not provide consistent disinfection. The system should be sized to meet the disinfection requirements of the venue.

Changes to Module/Annex:
Code revised, high-use requirements section deleted.

65. Comment:
4.7.3.2.8.5.1 -- Don’t know the effective percentage of chlorine that you would put in as it would be different for different chlorine system. Feed rate will not provide consistent disinfection. The system should be sized to meet the disinfection requirements of the venue.

Changes to Module/Annex:
Code revised.

66. Comment:
5.7.2.3.3.2 -- Currently not a practice and this is an opinionated process. Most of the industry would spray/ scrub clean with a degreaser, soak in an acid bath then rinse with clean water. I am not sure what the bleach spray is intended to do and might start to rapidly dry rott the cartridge media.

Changes to Module/Annex:
Disagree. Comment is addressing cleaning of the cartridge filter elements, the code section is addressing the filter housing.

67. Comment:
5.7.5.1 -- Why can't facilities reduce or eliminate flow in periods of closure to reduce energy consumption. For pools in daily operation, there should be 1 venue turnover following closing and 1 venue turnover prior to opening. Performed in conjunction with validated water quality test.

Changes to Module/Annex:
Disagree. Turbidity removal through filtration is based on consecutive dilutions assuming/requiring continuous/24 hr/day operation. In addition, in spas due to higher temperatures and elevated concentrations of organic matter, biofilms will form inside of the pipe during the period while the spa shut down. Biofilms can be very difficult to remove once they form leading to frequent or recurrent outbreaks in some cases. Temperatures of the spa can be reduced to reduce energy consumption while unoccupied

29) Steve Gibson, CES-DUFFIELD (Anderson, South Carolina)

1. Comment:
4.7.2.1.3.2 & 5.7.2.1.2 -- High-rate granular media filters shall be designed to operate at no more than 15 gpm/ft² (36.7 m/h). -- The proposed changes will simply add cost to facility design, construction and renovation. No data that supports 12 gpm/ft² over 15 gpm/ft² in performance has been submitted to other regulatory agencies. –
REFERENCE: South Carolina Code 61-51. California Codes, Florida Draft Code, NSF/ANSI Standard 50

Changes to Module/Annex:
Partially agree. Code and annex revised.

2. Comment:
4.7.2.1.3.2 & 5.7.2.1.2 -- The granular media filter system shall be designed to backwash each filter at a rate of at least 15 gallons per minute per square foot (36.7 m/h) of filter bed surface area, unless explicitly prohibited by the filter manufacturer and/ or approved at an alternate rate by NSF/ANSI 50 listing. -- There are many of types of media that require a lower backwash rate. There are also filters in utilizing an air scour or assist that backwash properly at lower rates. The backwash flow rate should be in accordance with NSF/ANSI 50 and should be validated by a third party testing agency to determine effective backwash rate for various types of media. – **REFERENCE:** NSF/ANSI Standard 50

Changes to Module/Annex:
Partially agree. Code revised.

3. Comment:
4.7.2.2.1.2 -- Filters should be used with the appropriate filter media as recommended by the filter manufacturer for maximum clarity and cycle length providing the media is NSF/ANSI Standard 50 approved for use in the filter. -- Filter media should be individually listed to the current NSF/ANSI Standard or the filter should be tested with the alternate media. – **REFERENCE:** NSF/ANSI Standard 50

Changes to Module/Annex:
Agree. Code revised.

4. Comment:
5.7.2.1.4 -- All filters shall be backwashed at least twice per month. -- The current wording is simply targeted at granular media filters. There should also be a requirement for pre-coat filters and cartridge filters if this requirement is to remain. There are filters on lightly used pools that backwash less frequently and have no operational issues.

Changes to Module/Annex:
Disagree. The requirement is for sand filters only and is based on removing collected contaminants from the recirculation system and reducing the fouling of filter media in the filters. Additional research needed before considering similar requirements for precoat and cartridge filters.

30) Steve Dunn, Commercial Pool Systems, Inc. (Martinez, California)

1. Comment:
4.7.1.6.2.3 -- Outlets no less than six feet apart does not take into consideration the

dynamic hold down forces. This is a dis-service to the industry and increases the chance of entrapments.

Changes to Module/Annex:
Unclear what changes are proposed by commenter. However, code revised.

2. *Comment:*
4.7.1.6.4.1 -- Here and throughout the document refers to “main drains”. They should be referred to as “bottom suction outlets” -- Current writings and ASME writing from many years ago.

Changes to Module/Annex:
Partially agree. Code revised to use term "outlet". Disagree with changing main drain to "bottom suction outlet" as some main drain outlets are designed to operate under gravity, not suction.

3. *Comment:*
4.7.1.7.2.1 -- Include suction side of pump velocity, 6 fps

Changes to Module/Annex:
Partially agree. Code revised to use term "outlet". Disagree with changing main drain to "bottom suction outlet" as some main drain outlets are designed to operate under gravity, not suction.

4. *Comment:*
4.7.1.8.3.1 -- Compound Gauge on suction side of pump. ????? Suction side should result in a vacuum therefor a vacuum gauge should be all that is required, unless the equipment is below grade by a minimum of 10 feet, then a compound gauge be required.

Changes to Module/Annex:
Disagree. No change. The gauges cost the same, and there are cases where the compound gauge provide additional (necessary) information such as the example cited here.

5. *Comment:*
4.7.1.9.1 -- Add: Flow meters shall be tested& certified to NSF Standard 50 -- Anyone can make a claim but it needs to be validated for accuracy.

Changes to Module/Annex:
Agree. Code revised.

6. *Comment:*
   4.7.1.10.7 -- 25% maximum turn down is too limiting. A maximum of so% should be allowed provided clarity, water quality and sanitation and pH control can be maintained. -- Common sense, energy savings

   Changes to Module/Annex:
   Disagree. No data provided to support proposed change.

7. *Comment:*
   4.7.2.1.4.1 -- Should read that the minimum depth of the filter media cannot be less than the amount set by the manufacturer. -- Written for the common person.

   Changes to Module/Annex:
   Agree. Code revised as suggested.

8. *Comment:*
   4.7.2.2.2.1 -- Change writing to: "The design filtration rate for vacuum precoat filters shall not be greater than:" 1) remove the words "greater than" from this point in the text. -- Easier reading / understanding of intent.

   Changes to Module/Annex:
   Agree. Code revised.

9. *Comment:*
   4.7.3.2.1.3 -- Add the word "are" between "which" and "resistant"

   Changes to Module/Annex:
   This section deleted as NSF/ANSI 50 addresses materials.

10. *Comment:*
    4.7.3.2.2.2 -- Calculated minimum chemical feed rates feeders is too low. Value should be 4 lbs of FAC / 10,000 gals. It doesn't matter how the chlorine by what feed method the chlorine gets into the water the The qty required is the same. Refer to your calculation for generators at 4.7.3.2.8.5.1. If 1.25 lbs were to be used in hot weather states they will fall behind in the maintaining of HOCL in the water that they will become dangerous to use. -- 4.7.3.2.2.2, 4.7.3.2.2.2.1, & 4.7.3.2.8.5.1

    Changes to Module/Annex:
    Agree. Code revised.

11. *Comment:*
    4.7.3.2.4.2 -- Injection of any chemical s are never to be injected prior to the equipment. Injection of chlorine in any form will result in the destruction of the heaters and other equipment. instead specify a minimum length of pipe between the injection of sanitizer and ph control chemicals.

    Changes to Module/Annex:
    Agree. Code revised.

12. *Comment:*
    4.7.3.2.5.3 -- Ad in ( ) after “probes the word (sensors)

    Changes to Module/Annex:
    Agree. Code revised.

13. *Comment:*
    4.7.3.2.7.3.1 -- All feeders should have isolation valves on each side of the feeders no matter if they are located below or above grade. -- safety

    Changes to Module/Annex:
    Agree. Code revised.

14. *Comment:*
    4.7.3.2.8.2 -- In-line generators: are located in the mechanical room. This is specified regarding brine generators in 4.7.3.2.8.3.

    Changes to Module/Annex:
    Partially agree. Code revised to eliminate location requirement.

15. *Comment:*
    4.7.3.2.8.4 -- Add: TDS or Salt (NACL) readout -- Addition to be inclusive of some of the meters available

    Changes to Module/Annex:
    Agree. Code revised.

16. *Comment:*
    4.7.3.2.8.7 -- It is not good enough to conform to the standard. The equipment must be tested and certified to NSF Standard 50 by an NRTL.

    Changes to Module/Annex:
    Agree. However, change not needed as equipment certification already addressed in a previous section.

17. *Comment:*
    4.7.3.2.10.1 -- It is not good enough to conform to the standard. The equipment must be tested and certified to NSF Standard 50 by an NRTL.

    Changes to Module/Annex:
    Agree. Code revised.

18. *Comment:*
    4.7.3.2.10.2 -- Add: (sensors) like prior comment

    Changes to Module/Annex:
    Agree. Code revised.

19. *Comment:*
    4.7.3.2.10.3 -- Change “generator(s)” to “chemical controller(s)”

    Changes to Module/Annex:
    Agree. Code revised.

20. *Comment:*
    4.7.4.2.2 -- Should not refer to TOC’s unless requiring a TOC meter be installed to measure concentration.

    Changes to Module/Annex:
    Disagree. This is a system design specification/consideration.

21. *Comment:*
    5.7.1.1.3 -- Same as prior “ use the newer terminology “bottom suction outlets”

    Changes to Module/Annex:
    Disagree. Not all main drains are under suction.

22. *Comment:*
5.7.1.9.1 -- Change “24 hours” to during the pool open operating hours

Changes to Module/Annex:
Disagree. Turbidity removal through filtration is based on consecutive dilutions assuming/requiring continuous/24 hr/day operation.

23. *Comment:*
5.7.2.1.4.2.1 #2) -- Backwash flow rate of no greater than 5 gpm/sq ft makes no sense. That’s not backwashing, that’s only disposing of water

Changes to Module/Annex:
This is a rinse that occurs after a normal backwash (with the water flowing in the upward/backwash direction).

24. *Comment:*
5.7.2.2.7.2 -- Correct writing: “in the amount of be used in the amount of”

Changes to Module/Annex:
Agree. Code revised.

25. *Comment:*
5.7.2.3.3.3.3.1 #2) -- How much water? Needs clarification

Changes to Module/Annex:
Agree. Code revised.

26. *Comment:*
5.7.2.3.3.3.4 -- Absolutely NO! You are advising mixing chemicals. DANGEROUS! SAFETY FIRST! Adding chlorine to TSP can cause toxic fumes. Degrease first, rinse thoroughly, then soak in CL and water mixture, rinse, then acid/water for removal of minerals, rinse, dry. -- DANEROUS / SAFETY

Changes to Module/Annex:
Agree. Code and annex revised.

27. *Comment:*
5.7.3.1.2.1 -- Procedure is contrary to CPO teachings. Large quantities of acids or chlorine products through the equipment will destroy the equipment in a short period of time

Changes to Module/Annex:
Agree. Code revised.

28. *Comment:*
5.7.3.2.7.1.2 -- Double containment pipe shall be of sufficient size to allow easy replacement of tubing for maintenance. All turns shall be 45 degrees and 90 degrees shall be sweeps

Changes to Module/Annex:
Agree. Code revised.

29. *Comment:*
5.7.3.2.7.7.2 -- It is much more efficient to inject CO2 via venture injection, however, CO2 can also be fed directly into the pipe and should be included in this item.

Changes to Module/Annex:
Agree. Code revised.

30. *Comment:*
5.7.3.2.7.7.2 -- Need to include code that a CO2 monitor/alarm shall be installed to alert operator of high CO2 / low O2 concentrations to avoid dangerous situations.

Changes to Module/Annex:
Agree. Code revised.

31. *Comment:*
5.7.5.3 -- Makes no sense. Backwash rate to match water temperature?

Changes to Module/Annex:
Agree. Code revised, Section deleted.

32. *Comment:*
5.7.5.4.2 -- Water replacement calculation should be used for pools as well as spas. Pools: use prior calculation or this calculation whichever is greater.

Changes to Module/Annex:

Agree that a pool calculation would be helpful. Because of the temperature and contamination burden difference between pools and spas, the calculation would likely not be the same.

33. Comment:
GENERAL: MAHC does not take into consideration the filters capabilities when specifying turnover rates and run times. A filter which filters at 1 micron with a fast turnover is substantially superior to a filter at 20 microns at suggested code rate.

Changes to Module/Annex:
The annex information on filtration is intended to start the industry thinking in this direction. It is challenging because no pool filters have been shown to be effective at removing 1-micron particles yet and even at the 5-micron size range it is not currently known which filters achieve what level of removal in all conditions or what % of the time they do perform well. There are some important pieces of the puzzle missing that prevents rating filters and size systems based on filter performance. For example, regenerative media filters have not yet been tested for Crypto-sized particle removal.

32) Carl Nylander, Counsilman-Hunsaker (St. Louis, Missouri)

1. Comment:
Definitions: Currently the term “therapy” pool is used ubiquitously throughout this and other modules. Here, they are defined as at risk venues due to the propensity of use by patrons who either have compromised immune systems or open sores. As a result, secondary disinfection is a requirement and turnover rates are not permitted to exceed 30 minutes, among other specific regulations.

In current industry vernacular, the term “therapy pool” refers to warmer bodies of water (similar to leisure pools or a little warmer, perhaps in the 86-88 deg range) that are used for wellness or aqua aerobics. These are fitness classes that are attended primarily by adults and seniors. They are no more likely to have open sores or compromised immune systems than the general population. This is the quickest growing user group in our industry and to subject these pools, which are often 50,000+ gallons would mean that the required pumps and filtration systems would be comparable to what is required for a 50 meter competition pool.

It’s recommended that separate classifications be created to address the regulations of therapy or wellness pools and rehabilitation pools (which appears to be the target for most of these regulations) which are typically in a hospital or clinic environment.

Changes to Module/Annex:
Terms have been defined in different modules. Terminology/definitions will be reconciled in the complete "knitted" version of the MAHC.

2. Comment:
4.7.1.2.1 -- ~~When treatment systems of aquatic venues are combined, the design shall include all appurtenances to maintain and measure the required water characteristics including but not limited to flow rate, PH, and disinfectant concentration in each venue/feature.~~ This language appears to require a water chemistry controller for each feature (slide, play structure, lazy river, etc.) and potentially even each zone within a leisure pool. What is the science behind this requirement as it's not consistent with any current standard. The State of Ohio was requiring a disinfection feed for each feature pump (though never controls) which was typically accomplished through the installation of erosion feeders on these feature lines while the main recirculation feed had metered chemical feeds and a controller for the pool as a whole. However, even Ohio backed off this requirement recently and now just requires that a minimum residual should be measured at each feature's return in the pool. If proper recirculation designs are followed, this is a much more reasonable approach.

Changes to Module/Annex:
Disagree. The ability to monitor and control the required water characteristics for each venue is necessary. The disinfectant demand and loss is different based on the characteristics and bather load of each venue.

3. Comment:
4.7.1.2.2 – If SECONDARY DISINFECTION is required for an INCREASED RISK AQUATIC VENUE/FEATURE as per MAHC Section 4.7.3.3.1.2, then SECONDARY DISINFECTION shall be required for all treatment systems that are combined with the INCREASED RISK AQUATIC VENUE/FEATURE.

The new construction or substantial renovation of the following INCREASED RISK AQUATIC VENUES shall be required to use a SECONDARY DISINFECTION SYSTEM after adoption of this CODE:

1) AQUATIC VENUES designed primarily for diaper-aged children (children <5 years old), such as a. wading AQUATIC VENUES, b. water activity AQUATIC VENUES, c. interactive water features with no standing water, and

~~2) Therapy pools. --~~

As noted previously, secondary disinfection for "therapy" pools is excessive and I'm not aware of any current standard where this is currently required. Aqua aerobics are the primary purpose of "therapy" pools. But in many communities, these classes take place in traditional lap pools which would not be "increased risk."

Changes to Module/Annex:
Disagree. The following definition provided in MAHC, “Therapy Pool” means a pool used exclusively for aquatic therapy, physical therapy, and/or rehabilitation to treat a diagnosed injury, illness, or medical condition, wherein the therapy is provided under the direct supervision of a licensed physical therapist, occupational therapist, or athletic trainer. This could include wound patients or immunocompromised patients whose health could be impacted if there is not additional water quality protection.

4. Comment:
4.7.1.3.3.6 -- ~~Dye testing shall be required to evaluate the mixing characteristics of the RECIRCULATION SYSTEM unless exempted by the local AHJ. --~~ Dye tests are a visual verification of adequate circulation, but what is to be done after construction? Rip out portions of the pool and re-plumb? It seems that this wouldn’t be necessary if the flow rate requirements, inlet spacing requirements, etc. in this standard are adhered to. It’s suggested that efforts be focused here rather than a dye test. For example, there is nothing requiring floor inlets for pools of a certain width. So, a 13,000+ SF 50 meter pool with 750,000 gallons of water can comply with the code in terms of the inlet design just utilizing an integrated supply tube in a gutter trough. If would be extremely unlikely that adequate recirculation would find its way to the middle of the pool and at deeper water. (This is noted in the annex for 4.7.1.3.3.4, but should find its way into the code for design and enforcement.)

Changes to Module/Annex:
Agree. Code revised regarding dye test mandate and requiring floor inlets for widths greater than 50 feet.

5. Comment:
4.7.1.4.1.1 -- All POOLs shall be designed to provide SKIMMING for the entire POOL surface area with engineering rationale provided by the design professional. – There should be a minimum percentage of the overall perimeter where gutters are required. Should have some flexibility with rivers, wave pools, etc. that typically have interruptions.

Changes to Module/Annex:
Commenter did not provide recommended revisions corresponding justification.

6. Comment:
4.7.1.4.4.2 -- The tank capacity specified shall be the net capacity – Define “net capacity”. It’s assumed that this is after neglecting normal operating water level. May consider stipulating that the gutter trough and gutter piping returns to the surge tank can be included in the capacity calculation.

Changes to Module/Annex:

Agree. Code and annex revised.

7. Comment:
4.7.1.4.4.4 -- ~~Surge tanks, shall have overflow pipes to convey excess water to waste via an air gap or other approved BACKFLOW prevention device.~~ Why must surge tanks have overflow pipes? Sometimes the tank is built above the level of the pool, preventing flooding of the deck? Or is there a reason why an one would need to be provided for all outdoor gutter pools where overflow is the result of a rain event and the excess water flows on the deck and evacuated vai deck drains?

There are also other methods, such as a water level controller that can be equipped with a high level sensor to close an electrically actuated solenoid on the domestic fill line if it is left open by an operator by mistake.

Changes to Module/Annex:
Disagree. A design to have pools overflow during rain events was not considered an acceptable option by the technical committee. The intent is to design to maintain gutters to be effective at all times, which would not occur during periods of overflow or being submerged.

8. Comment:
4.7.1.5.1.3 – Hybrid systems that can switch between skimmers and overflow gutters through the use of in-POOL surge shall meet all of the requirements specified for each system *(with the exception of the surge or balance tank since the surge capacity requirement will be alternately met by the in-POOL surge capacity*). – I assume this is speaking to “surge weirs?” There should be additional regulatory requirements on minimum quantity, flow rate, etc. Gutters require continuous perimeter overflow and 125% of recirc rate. At least one skimmer is required per 500 SF of surface area (and many standards have a flow rate per lineal inch of skimmer weir requirement).

I have seen traditional 25 yard lap pools with only one surge weir in each corner of the pool, for example. Certainly this would not meet the same design standard that skimmers or perimeter overflow gutters are held to.

Changes to Module/Annex:
Agree. Code revised to clarify requirements.

9. Comment:
4.7.1.5.1.6 -- ~~POOLs using skimmers shall not exceed 30 feet (9.1 m) in width. –~~ Rationale? If your return valves are throttled such that you are returning 80% of surface water and 20% of main drain water (probably the most typical balance and consistent with 5.7.1.1.3) to filtration, does it matter if it’s skimmers or gutters?

Many current regulations do not have a maximum pool width or surface area for skimmers because they are situated in parts of the country where expansive soils are present. Gutters are designed (by MAHC and most other standards) to a 1/8" tolerance. So if you have 1/8" + of differential movement at one end of a pool, you will only be skimming from the low end. Skimmers have adjustable weirs which make this situation a non-issue in most instances (see 4.7.1.5.4.1).

Changes to Module/Annex:
Disagree. Many states currently limit the surface area. This requirement is based on the limits of the skimmer to effectively skim water from the surface layer from greater distances.

10. Comment:
4.7.1.5.2.2 -- Skimmers shall be offset from steps and recessed areas. – What is meant by "offset?"

Changes to Module/Annex:
Agree. Code revised for clarity.

11. Comment:
4.7.1.6.4.1 -- The main drain system shall be designed at a minimum to handle recirculation flow of 100% of total design recirculation flow rate if a single main drain is blocked. – What is the definition of "a single main drain is blocked?" Does this include main drains that are greater in size than the blocking element used in main drain testing? Would a pair of 18" x 54" main drains only be allowed to account for flow through one 18" x 54" main drain? (Note: This is what North Carolina has used as their basis of code interpretation even though a body blocking element has been defined as 18" x 23" per ASME/ANSI A112.19.8-2007).

Changes to Module/Annex:
Partially agree. Code revised for clarity.

12. Comment:
4.7.1.6.5.1 -- Flow velocities shall meet ANSI/APSP-16 2011 based on 100% design flow through each main drain cover. -- Same as above. In addition, if more than two main drains are connected then is this criteria still applicable?

Changes to Module/Annex:
Partially agree. Code revised for clarity.

13. Comment:

4.7.1.7.2.1 -- RECIRCULATION SYSTEM piping shall be designed so that water velocities do not exceed ~~8 feet (2.4 m) per second~~ **10 feet per second** on the discharge side of the recirculation pump unless alternative values have proper engineering justification. – The overwhelming majority of current regulations allow for 10 ft/sec for return piping.

Changes to Module/Annex:
Disagree. The rationale for 8 fps. is to minimize energy consumption and provide flexibility to accommodate subsequent changes in operation or renovation .

14. Comment:
4.7.1.7.3.2 -- ~~Provisions shall be made for gravity drainage of all POOL piping exposed to a freezing climate. –~~ Gravity drainage of all pool piping is often not possible/feasible. Many will use compressors to blow out and cap lines or other methods for winterization. Should just state that all piping should be designed and constructed to be drained completely for winterization.

Changes to Module/Annex:
Agree. Code revised.

15. Comment:
4.7.1.7.3.4 -- ~~Provisions shall be made for expansion and contraction of pipes due to temperature variations. –~~ Text is a duplicate of 4.7.1.7.3.1

Changes to Module/Annex:
Agree. Code revised to eliminate duplication.

16. Comment:
4.7.1.8.3.1 -- A compound vacuum-pressure gauge shall be installed on the pump suction line as close to the pump as possible. -- Mention valve/snubbed?

Changes to Module/Annex:
Valves are required in Section 4.7.1.8.3.5

17. Comment:
4.7.1.10.2.1 – All AQUATIC VENUES as defined in the MAHC shall comply with the following maximum allowable turnover times show in MAHC Table 4.7.1.10: “Maximum Allowable Turnover Times.”

Table 4.7.1.10: Maximum Allowable Turnover Times

Pool Type	Volume (Gallons)	Turnover (Hours)
Competition & Public Recreation	<200,000 >=200,000	4.0 5.0
Apartment/ Condo	ALL	5.0
Wave	<750,000 >=750,000	1.5 2.0
Activity	<100,000 >=100,000	1.0 1.5
Catch/Plunge	ALL	1.0
River & Vortex	<100,000 >=100,000	1.0 1.5
Multi-Level Play Attractions	ALL	0.25
Spray Pad	ALL	0.17
Therapy	ALL	0.5
Wading	ALL	0.5

-- Turnover times are considerably more aggressive than industry standard. These are generally typical of recent ANSI requirements, but where is the science and empirical evidence that such a dramatic industry change is warranted?

What justification is there for one to one and a half hour turnovers for a wave pool, activity pool, or river? Is a river more or less loaded in terms of bathers per SF or gallon than potentially any other shallow water (plus the artificially generated currents permit greater water movement and less “dead zones,” arguably. What about slide plunge pools? These are lightly loaded, typically only a lifeguard and one patron per flume is in the plunge area at a time.

What about the 0.25 hour required turnover for multi-level play attractions? Does this mean the portion of a pool where this exists? How to define extents? It seems to me that this is speaking to the $1 million + large interactive play structures that do not have any, or very limited standing water. However, the vast majority of these interactive play structures are at the municipal level ($50K to $300K variety) and are incorporated into a shallow water area or zero beach entry that is part of a larger leisure pool.

Wherever these turnover times end up, it should be stipulated that separate zone calculations are required for these leisure pools that have a beach entry, small river, some open water, and a single slide with catch pool, for example. This is stated in the annex for 4.7.1.10.2, but should make its way into the code.

Also, zero entries and general shallow (typically 3.5 ft) leisure water in these pools should be regulated as they are often heavily loaded with bathers.

As previously noted, all “therapy” pools should not be held to a 0.5 hr turnover requirement. The State of Wisconsin’s standard takes a unique approach to therapy pools and sets the minimum turnover based on operating temperature and volume that might be worth further investigation.

Changes to Module/Annex:
Partially agree. Turnover rates revised.

18. Comment:
4.7.1.10.4.3 -- Supply water to attractions (e.g., slides, lazy rivers, and tube rides) may be reused prior to filtration provided the DISINFECTANT and PH levels of the supply water are maintained at required levels. – The State of Ohio was requiring a disinfection feed for each feature pump (though never controls) which was typically accomplished through the installation of erosion feeders on these feature lines while the main recirculation feed had metered chemical feeds and a controller for the pool as a whole. However, even Ohio backed off this requirement recently and now just requires that a minimum residual should be measured at each feature’s return in the pool. If proper recirculation designs are followed, this is a much more reasonable approach.

Changes to Module/Annex:
No change proposed by commenter. The requirement is purposely left as a performance goal and not prescriptive to allow designers and operators to determine the best way to maintain water.

19. Comment:
4.7.1.10.5.1 -- ~~The ratio of AQUATIC FEATURE water to filtered water shall be no greater than 3:1 in order to maintain the efficiency of the FILTRATION SYSTEM. –~~ Why does feature water diminish recirculation efficiency? A large waterslide may have a requirement of 5,000 – 8,000 GPM for the waterslide. If one or more slides exit into a dedicated plunge pool the 3:1 ratio for filtration leads to a filtration rate of thousands of GPM and a turnover time of less than 10 minutes. This is impractical and unnecessary with respect to water quality.

Changes to Module/Annex:
Disagree. This section only applies to spray pads. Code revised to clarify.

20. Comment:
4.7.1.10.6 -- For AQUATIC FACILITIES that intend to reduce the recirculation flow rate below the minimum required design values when the POOL is unoccupied, the flow turndown system shall be designed as follows in MAHC Section 4.7.1.10.6.1 to

4.7.1.10.6.3. -- Most turbidity meters are $4000 -- plus cost of VFDs -- and this limits many people from installing and using them.

Changes to Module/Annex:
Disagree since inline turbidity meter (turbidimeters) are available for less than $2,000 and VFDs are becoming more commonly used in new/renovated facilities. However, wording has been revised to eliminate use of turbidimeters to monitor.

21. Comment:
4.7.2.1.3.1 – High-rate granular media filters shall be designed to operate at no more than 12 gpm/ft2 (29.3 m/h). -- If filters are held to NSF 50 (per 4.7.2.1.1.4) and they rate HRS filters to 20 GPM/SF, I would assume NSF's testing should hold some weight. Later in this module, regenerative media filters are allowed at 2.0 GPM/SF (NSF tests to this same filtration rate), yet most manufacturers only recommend RM filtration rates of 1.0 to 1.6 GPM/SF depending on the type and location (indoor or outdoor) of the pool.

Every current filter manufacturer that I'm aware of recommends their filter operation at 15 GPM/SF. Later in this module (4.7.2.1.3.1 annex), it holds HRS systems to 12 GPM/SF only if you have 24" of sand bed depth, otherwise a maximum filtration rate of 10 GPM/SF is required. There are only three manufacturers that produce horizontal HRS vessels with these sand bed depths, all coming just in the 60" diameter filter tank line. So the vast majority would be held to this 10 GPM/SF threshold.

Changes to Module/Annex:
No change proposed by commenter. Sand filters do not work at 15 or 20 gpm/sf in terms of efficient pathogen removal and protecting public health; reducing filtration rates is the first step toward addressing this problem.

22. Comment:
4.7.2.2.2.2 – The design filtration rate for pressure precoat filters shall not be greater than 2.0 gallons per minute per square foot (4.9 m/h) of effective filter surface area. -- See previous comment. Why are RM filters held to a different standard than HRS filters relative to NSF? Plus when it's contrary even to all of the manufacturer's recommendations.

Changes to Module/Annex:
Commenter questions why MAHC requirements for high rate sand filters is more restrictive than the NSF standards allow, while the MAHC accepts the NSF filtration standard for regenerative media even though the NSF standard is less restrictive than recommended by the manufacturers?

23. Comment:

4.7.2.2.3.1 -- ~~A means shall be provided on the suction side of the pump for pressure precoat filter systems to introduce clean filter media while flowing water through the filter without return to the POOL (unless filters are NSF Standard 50 certified to return water to POOL during the precoating process). --~~ Should simply stipulate that the precoat process shall be per NSF.

Changes to Module/Annex:
Partially agree. Code revised.

24. Comment:
4.7.3.2.1.5.1 -- A clear (Plexiglas) protective cover shall be installed around chemical feed pumps to shield operating staff and equipment from potential sprays from leaking connections. -- Would a Plexiglas cover encapsulate a pump for a cal hypo feeder? Understand the intent here, but this isn't a current requirement in any other standard. It seems to be written with just small metering pumps in mind that are used for liquid chlorine or acid feed.

Changes to Module/Annex:
Partially agree. Code revised.

25. Comment:
4.7.3.2.4.2 – Injection of DISINFECTION chemicals shall be prior to filtration to reduce the likelihood of disinfectants and acidic chemicals mixing inside of pipes during periods of interruption to recirculation system flow. -- Injecting chemicals before the filter? Why? These are typically injected post-filtration. Interlock is required per 4.7.3.2.1.4. So if recirculation flow is interrupted, there will be no chemical feed (since the chemical feeders are typically tied into the chemical controller which is interlocked with the recirc pump).

Changes to Module/Annex:
Agree. Code revised.

26. Comment:
4.7.3.2.7.7 – Where used, Ultraviolet light (UV) systems shall be installed in the RECIRCULATION SYSTEM after the filters and before the heater and chemical feed connections. – I agree with the installation requirements here, but it conflicts with 4.7.3.2.4.2.

Changes to Module/Annex:
Agree. Section 4.7.3.2.4.2 has been revised.

27. Comment:

4.7.3.2.8.3 – Brine (Batch) generators shall produce CHLORINE through an electrolytic cell ~~that is located in the mechanical room.~~

Changes to Module/Annex:
Agree. Code revised.

28. Comment:
4.7.5.3.5 -- ~~INLET velocities shall be adjustable. --~~ Most just utilize wall inlets which are not adjustable.

Changes to Module/Annex:
Code revised. This section deleted, recirculation inlets already addressed

29. Comment:
5.7.1.4.5 -- The strainer baskets for skimmers shall be cleaned **as needed to maintain proper skimmer performance.** ~~daily. —~~ Likely not necessary for many pools, especially those indoors and with low use.

The pump hair and lint strainer (5.7.1.7.1) requires that they be “cleaned as required” to maintain skimming performance is preferred language in my opinion.

Changes to Module/Annex:
Agree. Code revised.

30. Comment:
5.7.2.1.4 -- ~~All filters shall be backwashed at least twice per month. --~~ Filter backwash should be based upon physical operating parameters or manufacturer recommendations in lieu of a schedule based upon time elapsed with no respect to physical operating parameters such as pressure differential.

Changes to Module/Annex:
Disagree. The requirement is for sand filters only and is based on removing collected contaminants from the recirculation system and reducing the fouling of filter media in the filters. Additional research needed before considering similar requirements for pre-coat and cartridge filters.

31. Comment:
5.7.2.2.2 -- ~~Precoating of the filters shall be required in closed loop (precoat) mode to minimize the potential for media or debris to be returned to the POOL. --~~ NSF has tests for precoating in a closed loop or in filter mode. Should simply stipulate that the precoat process shall comply with NSF requirements.

Changes to Module/Annex:
Partially agree. Code revised.

32. Comment:
5.7.2.2.7.2 -- ~~Perlite, when used, shall be added to precoat filters in the amount of be used in the amount of 0.5 to 1 pounds (0.23 to 0.45 kg) per 10 ft2 (0.93 m2) of filtration surface area. --~~ Dosing rates may depend on the filter design and element spacing. Should be left to manufacturer's recommendation assuming it has met NSF requirements.

Changes to Module/Annex:
Agree. Code revised.

33. Comment:
5.7.3.2.7.7.2 -- ~~Carbon dioxide shall be fed using a venturi or a booster pump connected to the RECIRCULATION SYSTEM. --~~ Why preclude the use of a diffuser or direct injection of carbon dioxide into the recirculation piping?

Changes to Module/Annex:
Agree. Code revised.

34. Comment:
5.7.5.2 -- SPAS shall be drained and cleaned when needed, but at least once every week. -- This does not take into account bather load. Current NSPF / CPO requirements call for draining based on the calculation of spa volume divided by 3 divided by the average number of bathers per day. If we were to achieve one drain per week, it would certainly be an improvement in most instances. Perhaps state that whichever frequency is greater is the one that should be adhered to. Should consider deleting 5.7.5.5 or folding it into the final language for 5.7.5.2.

Changes to Module/Annex:
Partially agree. Code revised.

35. Comment:
ANNEX 4.7.1.10.2 – A new methodology is being proposed for use in the future that calculates the recommended minimum design recirculation flow rate, which is called the maximum sustainable bather load (MSBL) calculation. The MSBL calculation is based on the values in MAHC Annex Table 4.7.1.10.2 (below) and adjusted by all applicable multipliers in MAHC Annex Table 4.7.1.10.3 (below) as the maximum turnover time allowable based on the pathogen load and chlorine demand imparted by bathers. Whereas, the traditional turnover time values (required in MAHC Code Table 4.7.1.10) are based on physical transport processes of contaminants and disinfectant in the pool.

The MSBL design turnover rates should use the adjustment factors provided. For mixed-use pools, each zone of the pool should individually meet the recommended turnover time for the zone based on the lesser turnover time calculated by the procedures already described. All of the maximum turnover times provided in MAHC Code Table 4.7.1.10 are required for aquatic venues as defined in the MAHC. The MSBL values calculated might help to identify pools that could be slightly over-designed to meet the demands placed on the venue. Furthermore, the MSBL approach actually identifies risk factors that might require higher or lower levels of treatment based on the actual system.

1) Zone Volume (ft3) = Zone Surface Area (ft2) x Average Depth (ft)

2) Zone Bather Load Factor (bathers/ft3) = 1/ {Surface Area per Bather (ft2/bather)} x (Average Depth (ft))

3) Estimated Maximum Number of Bathers Per Zone = Zone Bather Load Factor (bather/ft3) x Zone Volume (ft3)
4) Raw Recirculation Flow Rate Per Zone (gal/min) = Estimated Maximum Number of Bathers Per Zone x 5.34 (a constant)

5) Turnover time (h) = Water volume (gal) / {Recirculation rate (gal/min) x (60 min/ 1 hr)}

Table 4.7.1.10.2. Bather Loading Estimates

Depth (in Feet)	Surface Area Per Bather (square feet)
<3	25
3 to 6	30
6.1 to 10	22
>10.1	16

-- Why are the surface area (SF) per bather constants found in Table 4.7.1.10.2 different from conventional wisdom? Typically, industry standard has been to allow for one bather per 15 SF of shallow water (less than 5 ft) and one bather per 25 SF of deep water area. I recall this logic rationalized in the Ventilation module previously posted which assumed that a bather in shallow water occupied less space since they tended to be vertical, compared to deeper water where more bathers are swimming and horizontal, occupying a greater area. The result in applying Table 4.7.1.10.2 are maximum number of bathers (step #3 in the MSBL calculation) that are many times around 50% less than what are typically allowed by most jurisdictions today. So, either a compelling justification should be presented on why such a substantial decrease in

the allowable number of bathers should be enforced, or the SF constants in Table 4.7.1.10.2 should be adjusted (and as a result, likely the 5.34 constant in MSBL step #4 to achieve a reasonable turnover outcome and consistent with previous comments on section 4.7.1.10.2.1).

Changes to Module/Annex:
Partially agree. Turnover rates revised. Bather load calculation defined that do not use these numbers.

36. Comment:
ANNEX 4.7.2 – The filtration system should be designed to remove physical contaminants and maintain the clarity and appearance of the pool water. However, good clarity does not mean that water is microbiologically safe. With chlorine-tolerant human pathogens like Giardia and Cryptosporidium becoming increasingly common in pools, effective filtration is a crucial process in controlling waterborne disease transmission and protecting public health. The filtration system of U.S. swimming pools has traditionally been designed to remove physical contaminants and maintain the clarity and appearance of the pool water. Good clarity is important and will help prevent drowning and underwater collisions. Poor clarity can actually compromise the disinfection process as well as leaving chlorine-tolerant pathogens suspended in the water for longer periods of time. As a future recommendation for discussion, filtration systems should be capable of removing Cryptosporidium oocysts or an acceptable 4.5micron surrogate particle with an efficiency of at least 90% (i.e., a minimum of 1 log reduction) single pass. -- Globally speaking, a unified design approach should be evaluated for MAHC standards. A good example is the desire for 3 log reduction to address Crypto removal.

While UV is required for all “increased risk” pools, as a previous module has already proposed, combined chloramine levels will not be allowed to exceed 0.4 ppm. This will almost certainly require UV for ALL indoor pools, regardless of type (studies have cited that over 96% of all current pools have combined chlorine levels greater than 0.6 ppm, let alone 0.4 ppm).

Then there is the requirement for crypto removal in filter systems which are moving towards a more aggressive reduction standard for Crypto removal which will make coagulants at minimum a requirement for sand filtration to reach these minimum levels of achievement.

But if we have achieved 3 log reduction through UV, why is redundant design (filtration) necessary?

Changes to Module/Annex:
Disagree. The likelihood that 96% of pools will have UV in the immediate future is pretty small. The MAHC also applies to outdoor pools and pools without UV systems. Redundant systems provide protection when another system fails.

37. Comment:
4.7.2.1.1.1 – Sufficient floor space should be available to accommodate installation of additional filters to increase the original filtration surface area by up to 50% should it be recommended by future regulations or to meet current water quality standards. This is part of the hydraulic flexibility recommendation of newly constructed pools. The idea is to recommend space for additional filters should they become necessary at some point in the future. The 'extra' space could be utilized to make equipment rooms safer and more functional. – I've never encountered a similar provision to this which is requiring 50% additional space for future expansion. If an engineer is being held to a filtration rate of 10 GPM/SF today, are we suggesting that 7.5 GPM/SF may be warranted in the future? What about other equipment? What if turnovers were to increase in the future, should we size buried piping to accept 150% of the current design flow? Should diving wells be constructed 50% deeper than current regulations to account for any future movement in the regulations? The filtration rate for sand filters, requirements for single log reduction, and the suggested mechanical room area increase (often around $120/SF) is likely going to drive every new pool towards regen media which can be cost prohibitive up front for many people.

Changes to Module/Annex:
.
Partially agree. Annex revised

38. Comment:
ANNEX 4.7.2.1.3.1 – Ideally, high-rate granular media filters should be designed to operate at no more than 12 gpm/ft2 (29.3 m/h) for filters with a media depth above the laterals of at least 24 inches (0.61 m). Filters with less than 24 inches of media between the top of the laterals and the top of the filter bed should operate at no more than 10 gpm/ft2 (24.4 m/h). The granular media filter system should be designed to backwash each filter at a rate of at least 15 gallons per minute per square foot (48.9 m/h) of filter bed surface area, unless explicitly prohibited by the filter manufacturer. Specially graded filter media should be recommended in filter systems backwashing at less than 20 gpm/ft2 (48.9 m/h) to be able to expand the bed at least 20% above the fixed bed height at the design backwash flow rate, which is subject to approval by the local authority. Filtration and backwashing at the same flow rate is likely to lead to poor performance of both processes. Backwashing at double the filtration rate is not all that complicated with a 3-filter system, where the flow of two filters is used to backwash the third. Further, backwashing with unfiltered water is possible in a 2-filter system by backwashing with the entire recirculation flow through each filter individually. Variable drive pumping systems and accurate flow meters also contribute to the likelihood of successful backwashing as well as effective filtration.

Filtration at 10 gpm/ft2 is really pushing the envelope for attaining effective filtration and would not be recommended for a municipal drinking water system using sand filters due to doubts about the ability of such a filter to remove particulate contaminants reliably. --

Requiring 24 inches of sand bed depth, as previously mentioned, will have this 12 GPM/SF filtration rate apply to only three current manufacturer's horizontal HRS filter tanks – and only to their 60" diameter line. All others will then require 10 GPM/SF. And having used drinking water standards for prior justification states, *"Filtration at 10 gpm/ft2 is really pushing the envelope for attaining effective filtration and would not be recommended for a municipal drinking water system using sand filters due to doubts about the ability of such a filter to remove particulate contaminants reliably."*

Changes to Module/Annex:
Agree. Annex revised.

ADDITIONAL INFO FROM CARL NYLANDER:

General editorial comment and analysis on the MAHC drafts:

Counsilman-Hunsaker randomly selected a facility that was previously designed and constructed a few years ago using best industry practice and compared it to what the aquatic construction cost would be for a comparable facility that adhered to the MAHC standards as they have so far been proposed in the drafts to date.

The facility studied was a municipal recreation center in Texas that included an indoor 8 lane 25 yard competition pool, an indoor 5,300 SF leisure pool in a separate enclosure, and two outdoor leisure pools with a total water surface area of approximately 7,800 SF. There are two body slides indoors, a small current channel, and small interactive play structure. Outdoors there are three body slides, a few water sprays, and a small interactive play structure.

Achieving minimum filtration rates outlined within this module would have a net impact on the filter tanks alone of $133,000. If an additional 50% of filter room area is necessary for future filter tank expansion, at $120/SF, this cost increase would be $187,200.

Medium pressure UV units were provided for both indoor pools. But due to the disinfectant calculations that are impacted by the facility's downtime, the required UV flow rate for the competition pool would increase 225% to 1743 GPM (which increases the competition pool turnover from 5 hours to 2.23 hours). The two outdoor pools would now be viewed as "increased risk" venues, so UV would be required. The net increase for construction cost for the UV units is $66,000, which does not include costs for the audible and visual alarms that are required for low or no flow conditions in the natatorium or at the pool deck.

As chemical metering is proposed as required, each feature pump would need chlorine and acid feed pumps along with a water chemistry controller. There are 11 feature pumps at this facility, so even assuming chemical controllers with just basic functions, a total cost increase would be $36,500.

The pool turnovers would increase to 2.23 hrs for the competition pool, 0.95 hrs for the indoor leisure pool, 1.33 hrs for the larger outdoor leisure pool, and 0.17 hrs for the smaller outdoor leisure pool (the final three turnovers were driven by the MSBL calculation and assumed that bathers would be required to shower prior to entering the pools). With the resulting increased flows and the maximum return pipe velocity reducing from 10 ft/sec to 8 ft/sec, there is a $39,000 cost increase for the recirculation pumps and strainers, and conservatively, a $496,000 increase in piping. (Note that the competition pool pump increased from 20 hp to 50 hp and the suction and return piping went from 10" and 8" to 12" and 10", respectively. Similarly the indoor leisure pool pump went from a 20 hp to 60 hp and main suction and return pipe sizes from 10" and 8" to 16" and 12"; the larger outdoor leisure pool pump went from 20 hp to 50 hp and pipe sizes from 10" and 8" to 14" and 12"; and the smaller outdoor leisure pool pump went from 7.5 hp to a 25 hp and pipes from 6" and 4" to 10" and 8", respectively.)

The Ventilation module increases the minimum amount of fresh air that is required in the natatorium fairly dramatically from what is currently called for by ASHRAE 62.1. For the competition natatorium, the minimum fresh air requirements would go from 4,058 CFM to 7,499 CFM (85% increase). In the leisure natatorium, the fresh air requirements would jump from 5,581 CFM to 17,154 CFM (over three fold increase from ASHRAE 62.1). This additional air handling and associated ductwork would cost an additional $80,000 ($10,000 for the competition natatorium and $70,000 for the indoor leisure pool natatorium).

The original pool construction cost for this facility, plus natatorium HVAC and dehumidification, was $2,910,000. If this same facility were constructed today adhering to the standards proposed by the MAHC, the cost would be approximately $1,037,700 greater. And this would not take into account any operational costs for the larger pumps, dehumidification systems, UV systems, etc. which can be anticipated to far exceed the capital cost variance over the life of the facility which would increase the need for subsidization in order to keep the aquatic components viable economically.

It should also be noted that if the estimated maximum bather load (as calculated by using the MSBL formula) was adhered to for facility capacity, the overall maximum allowable bather load for these four pools would drop from 1,102 to 688 people (a 38% percent decrease).

Our concern, and that of many others from whom we have spoken to in the industry, is that we are regulating ourselves out of new pools being constructed. Ultimately, this will have a broad impact from quality of life to a dramatic increase in the percentage of the general population who cannot swim (and therefore the number of potential drownings) due to lack of access.

WHITEPAPER ON

The Need For Strict Regulations For Cleaning Swimming Pools & Spas, and The Mandatory Use of Cleaners and Vacuums In The Center For Disease Control's Proposed Model Aquatic Health Code

Originally Presented August 23, 2012, Revised August 29, 2013

by Richard K. Cacioppo, Sr. J.D., CPO, CPI. CPSPI, CAEA, CST, CMS, CAFO, CPST*

Table of Contents

I Introduction and Overview Pertaining To This Revised Edition 3

Introduction and Overview 4

Postulates 4

The Relevance of This Work 6

Microorganisms in Aquatic Facilities 6

HISTORICAL PROSPECTIVES 7

WHY REGULATIONS RELATING TO CLEANING, VACUUMING AND CLEANING AND VACUUM EQUIPMENT ARE NECESSARY 16

The Myth of The Effectiveness of The Pool's Filter System 16

Common Items and their respective particle sizes 17

The Dangers Of Failure To Include The Proposed Regulations 19

Traditional Methods of Removing Cryptosporidium 19

INCLUSION OF A REGULATION REQUIRING POOL CLEANERS AND VACUUMS HAS OTHER MAJOR HEALTH BENEFITS. 26

Manual Brushing and Vacuuming Is Utterly Inefficient and Ineffective … And Inexcusably Expensive 27

Both A Robotic Cleaner and Handheld, Extended Reach Vacuum Are Needed 31

A Peripheral Benefit, Energy Savings 35

Electricity Usage and Cost Comparison 37

The Regulations Should Also Be Proposed Guidelines For Private, Residential Pools, Spas and Hot Tubs 37

Proposed Regulations For The Use Of Swimming Pool & Spa Cleaners and Vacuums 39

Bibliography of Sources Referenced 40

AUTHOR BIO (Partial) 55

Introduction and Overview Pertaining To This Revised Edition

One year ago in anticipation of the CDC Steering Committee and Technical Committee of Filtration and Circulation released the last of the proposed Model Aquatic Health Code (MAHC) modules, the original version of the White Paper was authored, published and delivered to both committees and other personnel believed to be involved in the creation of the MAHC. The original plan apparently was for the Steering Committee to release for public comment all of the modules, including this one after they were completed and formatted. However, it has revised that plan and has released an incomplete version of the Filtration and Circulation module, stating that it will continue to be developed and by year's end will release the final version for another round of public comment.

The delayed and release of what turned out to be an incomplete version of the module also allowed the Center for Public and Lodging Pool Study(CPLS)and its Founder and Executive Director, the author to conduct additional research and analysis and also revise its original proposed recommendations that the code include the following regulations:

> **"All public *and private* swimming pools, spas and hot tubs shall have available and use on a regular basis the following vacuum cleaners:**
>
> **An electric robotic vacuum cleaner with an onboard micro filter bag with a porosity of four microns or less. It shall include an electric motor pump and drive or combination pump and drive motors capable of cleaning 90% of the interior surface of a pool in five hours or less;**
>
> **A handheld vacuum cleaner capable of attaching a standard pool pole or including a customized pool with an onboard micro filter bag with a porosity of ten microns or less. It shall include an electric motor capable of filtering at least 10 gallons per minute."**

As a result of that study and analysis, coupled with the actual proposed module the CPLS now concludes that the module and thus the entire code has a glaring omission, namely that there are no regulations requiring or even recommending pool and spa be cleaned, much less in what form, manner or regularity. The CPLS still contends that in order to effectively and efficiently clean a pool and/or large spa state-of-the-art mechanical technology should be used, meaning electric robotic pool cleaners and handheld/extended use pool and spa vacuums. While it also contends that such cleaners and vacuums must have onboard filters with pore sizes small enough to help remove Crytosporidium oocysists {4-7 microns (µm)} it now proposes that every pool and large spa owner be required to have and regularly use a robotic cleaner and pool and spa vacuum that meets the impending standards determined by the National Sanitation Foundation (NSF). (The CPLS is currently working with the NSF to establish that standards and certification critieria).

What follows is the original text of the White Paper with revisions.

Introduction and Overview

This White Paper is directed to the Recirculation Systems and Filtration Technical and Steering Committees of the Center for Disease Control's (CDC) proposed Model Aquatic Health Code (MAHC) which is in its final review and on the precipice of publishing its Module Abstract. It is intended to help educate the committee on the aquatic health necessity for inclusion in the proposed regulations for state-of-the-art, state-of-the science independent cleaners and vacuums and present an evidentiary-based factual argument for the final module to include the language or the equivalent that will be proposed below.

Postulates:

The MAHC must include proposed regulations for all public (and in fact residential) pools requiring regular cleaning, namely brushing and vacuuming at established intervals in an established manner and the use of a robotic swimming pool cleaners and a handheld/extended reach vacuum both with effective filter pore size and other performance criteria established and certified by the NSF based on the following rational:

1.) **Any Health Code Must Include Guidelines and Regulations For Cleanliness.** The MAHC will include a segment on *Disinfection and Water Quality* along with *Recirculation and Filtration*. Ignoring cleanliness caused by dirt, germs and inorganic as well as organic contaminants in a pool and spa water will ignore the first principal of cleanliness and sanitation. Non-profit organizations like the *National Sanitation Foundation* for consumer products, the *Food Safety Institute of America's Hazard Analysis Critical Control Points* (HACCP) program and the private for profit *Ecolab* help set guidelines, codify, monitor and inspect and enforce regulations relating to basic cleanliness. It would be a gross malfeasance of responsibility for the CDC to propose uniform national guidelines to the 3200+ state and local health agencies that regulate aquatic facilities that ignore the need and proper manner to clean such facilities;
2.) **There Is A Profound Need**. Assuring the healthiest aquatic environment requires the regular use of the available state-of-the-art, state-of-the-science cleaners and vacuums independent of the main pool filter and circulation systems;
3.) **Most filters used today are ineffective and incomplete**. The gross majority of public and private residential pools use high-rate sand filters that are incapable in removing inorganic contaminating particles without a flocculent and coagulants;
4.) **Respect and Credibility Must Be Maintained.** The MAHC was originally intended as to quell the spread of deadly Cryptosporidium and other recreational water diseases. The steering and individual technical committees will have gone off course, other than the proposed Module for Disinfection and Water Quality, Hygiene and Fecal/Vomit Blood Contamination Response if the code fails to include regulations for proper cleaning methodology and equipment. This will result in losing the respect and credibility for this undertaking.

5.) **History Cannot Be Ignored; Failure To Do So Will Be Regressive and Negligent**. In 1926 the American Public Health Association Committee of Sanitary Engineers published a report and proposed uniform regulations that recognized the necessity of all pools having an independent vacuum cleaner available and used to remove particles;
6.) **The MAHC Must Be A Role Model**. While the gross majority of the reported 3200+ state and local agencies that issue ordinances and regulations relating to aquatic facilities at best include and enforce only those very general in nature, some states do require the use of an independent vacuum cleaner. The MAHC should provide the most in-depth guidelines;
7.) **Regulations Relating To Proper Cleaning Will Save More Lives and Prevent More Injuries Than The Virginia Graham Baker Act.** That federal legislation was an industry response to deaths and injuries caused by entrapment. Far more deaths, injuries and illnesses can be prevented by strong regulations requiring proper cleaning methodology and equipment;
8.) **Both Robotic Cleaners For General Cleaning and Handheld/Extended Reach Vacuum Cleaners Are Necessary.** Robotic vacuums will only vacuum, brush and filter approximately 90% of the surface area of a pool, floors;
9.) **The Guidelines Should Also Be Set For Private Residential Pools, Spas and Hot Tubs;**
10.) **As A Peripheral Benefit, These Products Will Save Precious Energy.**

This document follows an almost two-year long intensive study by the author and the Center For Public and Lodging Study (CPLPS) which upon learning of the committee's purpose and goals recognized the need for such a white paper. The CPLPS was founded by the author an expert in pool cleaning and cleaners and is headquartered in Princeton, New Jersey for the specific purpose of studying, conducting tests and providing education on the subject of proper cleaning methods and equipment of public a.k.a commercial swimming pools (and by way of example and extension to all pools and spas).

The author, Richard K. Cacioppo, Sr. its Founder has extensive experience and expertise in pool and spa cleaners and vacuums and is the author of the only known work on the history of the pool cleaner, *The History of Pool Cleaners*, published in 2011. He is in the midst of completing his manuscript and publishing his upcoming work, a comprehensive history of pool filtration and cleaning methodology.

Mr. Cacioppo is uniquely qualified to present this work given his extensive experience and expertise in the law, the pool and spa industry and his acquisition of a virtual unequalled array of aquatic operation, management, pool filtration and circulation , water quality and other certificates and certifications by virtually every major aquatic environmental health organization. As the attached bibliography demonstrates he has read, reviewed and intensely studied virtually every published document, article and report readily available on this subject matter. He has had long discussions with the committee's chairperson after traveling to Charlotte to meet with him on several occasions and have consulted with a myriad of other scientists and academicians both domestically and internationally.

The Relevance of This Work

As reported by the Network for Public Health Law, “In 2005, the Centers for Disease Control and Prevention (CDC) sponsored a workshop called "Recreational Water Illness Prevention at Disinfected Swimming Venues.” The workshop assembled individuals from different disciplines working in local, state and federal public health agencies and the aquatics sector to discuss ways to minimize recreational water illnesses (e.g. gastrointestinal, skin, ear, respiratory, eye, neurologic and wound infections) resulting from exposure to contaminated water. A key recommendation from the workshop was to develop a data-driven, best practices-based, open-access resource to prevent recreational water illnesses and injuries, and to promote healthy and safe recreational water experiences. This led to the development of the Model Aquatic Health Code (MAHC).”

Of the approximate fourteen technical committees all preliminary modules are believed to have been published, albeit not in final form for public review. The latest module published is that on Recirculation Systems and Filtration module, which along with that of Disinfection & Water Quality appear to be the most relevant to target the original purpose of the workshop and subsequent decision to develop the MAHC, while arguably those relation to Hygiene Facilities and Fecal/Vomit/ Blood Contamination Response are also relevant. Two related glaring omissions in this module are (1) No regulations relating to cleaning, namely brushing and vacuuming pools and spas and, (2) No regulations requiring the use of scientifically-proven electric robotic and handheld/extended-reach pool and spa vacuums.

Microorganisms in Aquatic Facilities

The existence of microorganisms was hypothesized for many centuries before the invention of the microscope by Antonie van Leeuwenhoek in the 1670s and his concurrent discovery of bacteria and other microscopic organisms.

At about the same time Sir Francis Bacon started experimenting with an unsophisticated form of sand filtration. It did not exactly work, but it did paved the way for further experimentation by other scientists.

Early in the 19th century a sand filter was built in Scotland and within a few decades James Simpson constructed a water treatment plant in London. While for several millennium there existed so-called “public baths” which other than for the affluent were more for actual bathing than recreational and social purposes Later in that century public pools began to be built, it was not until later in that century that public pools began to be built. As they rose in popularity the dangers of contamination became

recognized. In the 1890s America started building large sand filters to protect public health and as the popularity of swimming pools grew

HISTORICAL PROSPECTIVES

The proposed MAHC is not the first attempt to propose a uniform aquatic health code. The credit for that goes to the American Public Health Association (APHA) which 100 years ago recognized the dangers of improperly-maintained aquatic facilities and formed a committee in 1918 to that for the next 66 years issued eleven so-called "Swimming Pools and Other Public Bathing Places Standards For Design, Construction, Equipment And Operation" recommended ordinances and regulations. But for a variety of reasons none of these recommendations were adopted, at least not formally or completely. The main one is that neither the APHA, the federal government nor any of the individual states have adequate power to enforce health and safety rules, nor the resources to do even if they had that power.

The APHA was founded in 1872 at a time when scientific advances were helping to reveal the causes of communicable diseases. These discoveries laid the foundation for the public health profession and for the infrastructure to support its work. From its inception, the APHA was dedicated to improving the health of all residents of the United States. The APHA's founders recognized that two of the Association's most important functions were advocacy for adoption by the government of the most current scientific advances relevant to public health, and public education on how to improve community health. Along with these efforts, APHA has also campaigned for the development of well-organized health departments at both the federal and the local level. However it or for that matter any and every private, quasi-public or even public agency has very limited powers, which are for all intense and purpose are restricted to just making recommendations. They can study health problems all they want to, but to formulate and execute plans in the form of laws, ordinances and regulations they have very limited and in some case no enforcement authority.

There has long been an ongoing problem since the country was born regarding what is referred to as "conflicts of laws." While the United States Constitution is the *supreme law of the land,* it is not all-inclusive and there is always a battle between the federal government and the states as to who has the power to protect the people. So-called *states' rights* are always an issue. This is particularly one of the reasons why no national or even uniform aquatic health code has ever been adopted, or at least enforced.

The right of states to make laws governing health, safety, welfare, and morals is derived from the Tenth Amendment of the United States Constitution which states:

> "The powers not delegated to the United States by the Constitution, nor prohibited by it to the states, are reserved to the States respectively, or to the people."

This is generally referred to as "police power," which does not specifically refer to the power to create police forces. It has been held to authorize state legislative bodies to exercise their police power by enacting statutes, and also delegate much of this police power to counties, cities, towns, villages, and large boroughs within the state. The CDC estimates that there are over 3200 state and local health agencies responsible for adopting and enforcing ordinances and regulations relating to aquatic environments. They do so because the Constitution has no specific provisions relating to health and safety laws.

The APHA has tried to develop a uniform aquatic health code, or what it referred to for years as referenced above, "and published short reports annually from 1920 through 1925 that it simply referred to as "Report Of The Committee On Bathing Places." and finally in 1926 it published in its journal its first comprehensive report it called "Standards For Design, Construction, Equipment And Operation" for "Swimming Pools And Other Public Bathing Places." Twelve others were published through 1981, however its lack of authority to enforce them is implied by the changing description of what was limited to their recommendations or suggestions and the expressed purposes in issuing them. In 1957, it referred to its report as "Recommended Practice for Design, Equipment and Operation of Swimming Pools and Other Public Bathing Places." In the most comprehensive one since 1926 and until it stopped issuing them in 1981 it referred in 1964 to its report as "Suggested Ordinance and Regulations Covering Public Swimming Pools" and in 1970 one for "Private Swimming Pools." Its last report in 1981 was called "Public Swimming Pools: Recommended Regulations for Design and Construction, Operation and Maintenance."

In 1926 appears the committee believed its standards would be adopted by the empowered jurisdictions, although who they were never mentioned in the report.

In 1964 the boldest move of all took place as it presented its recommendations in the form of proposed ordinances and regulations and in the Forward concluded:

> "State and local governments who desire to enact this Suggested Ordinance and Regulations Covering Public Swimming Pools a useful resource."

In 1912, ironically the same year when the United States Patent and Trademark Office issued the first patent for a swimming pool cleaner, the Sanitary Engineering Section of the American Public Health Association (APHA) convened in New York City to lay the groundwork for the first recommended pool and spa regulations. As reported in the American Journal of Public health in April 1912 a meeting was held in Havana the previous December and at the New York meeting among the subjects that the committee was to be studying was "Hygiene of swimming pools."

Six years later a committee on swimming pools was appointed at the APHA's annual meeting in Chicago and in 1920 a similar committee was appointed at the meeting in Washington, D.C. In 1921 and periodically over the next seven decades until the work of the APHA on this subject matter was

through a series of division and consolidation diverted elsewhere its committees and joint committees with other health-orientated public and quasi-public organizations issued proposed ordinances and regulations in the form of unenforceable *recommendations*. Despite their intended and published goals, none became *the law of the land*, uniform, much less national.

In 1921 the first report of the Committee of Sanitary Engineers followed an attempt "to obtain information as to the extent and prevalence of diseases which may be conveyed by means of bathing places from a large number of physicians whom we believe may be in a position to furnish information of value." 2,000 copies of a questionnaire were sent out and replies came from 41 states and the territory of Hawaii. It noted that Arkansas, New Mexico, Louisiana, Florida, Idaho, Tennessee, Washington, West Virginia and California which was "the pioneer state in this work, having legislated on it during 1917.

None of the proposed *Standards* included more than a passing reference of the need to properly clean a pool. A few, but curiously not all of these recommended ordinances and regulations related to the use of a vacuum, although the first that included any specificity in 1923 at least required a certain level of clarity.

The 1921 report, barely a few pages in length made this reference to the need to clean the pool.

> "Pool cleaning is done by completely emptying the pool an average of twice weekly and scrubbing with stiff brushes and soap. Hose flushing follows the scrubbing. After the flushing outlet is opened, the well turned on and clean water allowed to water over the floor of the drains, etc..."

It did not include any requirement for vacuuming or any other cleaning apparatuses.

Cleaning a Swimming Pool with a New Device That Operates under Water in Much the Same Manner as a Vacuum Cleaner

In 1919 this photograph appeared in Popular Science magazine showing a public pool being vacuumed in a manner that appears much the same as it would be 93 years later in the absence of any regulations.

The 1923 report, slightly longer, but still very brief stated:

> "Section 3. *Clearness*: At all times when the pool is in use the water shall be sufficiently clear to permit a black disk six inches in diameter on a white filed, placed on the bottom of the pool at the deepest point, to be clearly visible from both sides of the pool when the water is quiet.'

It further stated:

> "No swimming pool shall be opened to the use of bathers on any day until all visible dirt (not stains) on the bottom of the pool and any visible scum or floating matter on the surface has been removed. Scum and floating matters may be infectious material and should always be removed as soon as possible after they are observed.

Therefore, in 1921 it was recognized that infectious material, namely pathogens collect in the pool and should be removed.

It was not until 1926 twelve years after the organization recognized the need to address swimming pool "hygiene" and eight years after the committee was organized that the first true report was issued and later published in the Journal of the American Public Health Association. This report, authored by Stephen DeM. Gage, its Chairman included the referenced *Gage and Bidwell's Laws of Dilution*, or specifically as referenced in the report "law of purification by consecution dilution as applied to recirculation and flowing through pools." It stated an abstract was in preparation, but there is no generally-known evidence it was ever completed. This principle is emblematic of the lack of attention and detail the swimming pool, and in fact the entire health care industry has always dealt with the acknowledged need to give attention to the aquatic health environment, shoddy and incomplete. Even today, 86 years later it is quoted, often misquoted and paraphrased even today although virtually all informed observers.

As will be demonstrated below these periodic recommendations were largely lost in the maze of bureaucratic red tape, politics and continuous battle for power between the states and the federal government. Of all of its reports from 1920 through 1981 the first major report by the APHA in 1926, written in narrative form as were the succeeding nine ones though 1957 the committee included the detailed provisions relating to pool cleaning, vacuuming and vacuums:

> "E. *Suction Cleaner*: In the opinion of the committee the only satisfactory method of removing the dirt, hair, etc., settling on the bottom of a pool is by means of a suction cleaner. As such cleaners are commonly operated by the circulation pumps; they may be classed as an adjunct to the recirculation system. When a suction cleaner is to be operated by the recirculation pump, a gate with graduated stem or other registering device should be provided for throttling the flow from the pool outlet to permit the pump to operate at maximum efficiency when the suction cleaner is in use. Fixed pipe connections for attachment of suction cleaner to pump suction should be of ample size to reduce friction to a minimum

and the cleaner and all removable connections should be designed to provide a maximum velocity at the suction nozzle. "

"XXVI *Cleaning Pool*

A. Visible dirt on the bottom of a swimming pool shall not be permitted to remain more than 24 hours.
B. Any visible scum or floating material on the surface of a pool shat be removed within 24 hours by flushing or other effective means"

The periodic reports that followed simply cut and pasted the language of the 1926 report.

In the 1957 report, the following language was included:

"*Suction Cleaner*

In the opinion of the committee a satisfactory method of removing the dirt, hair, etc., settling on the bottom of a pool is by means of a suction cleaner. With careful operation a brush may also be used successfully although the committee recommends the provision of a suction cleaner. As suction cleaners are commonly operated by the circulation pumps, they may be classed as an adjunct to the recirculation system. When a suction cleaner is to be operated by the recirculation pump, a gate with graduated stem or other registering device should be provided for throttling the flow from the pool outlet to permit the pump to operate at maximum efficiency when the suction cleaner is in use. Fixed pipe connections at least 8 inches below the water surface for attachment of suction cleaner to pump suction should be of ample size to reduce friction to a minimum, and the cleaner and all removable connections should be designed to provide a maximum velocity at the suction nozzle. Some use of portable suction cleaners has been reported."

This is almost shamefully lifted verbatim from the language of the 1926 report issued 31 years earlier in the author's *History of Pool Cleaning* it is demonstrated that numerous patents were issued for swimming pool cleaners in that interim period and in fact in 1926 there were only two or three patents issued for pool cleaners. Thus the committee ignored any advanced in cleaning equipment technology.

In 1959 the committee decided not to use the narrative report form but concentrate upon the development of three model codes, one concerning public swimming pools, another covering private residential-type pools and a third involving nature bathing areas. It took five years when in 1964 the first report, that relating to public pools was issued, and six years later a very brief one was issued related to private residential pools.

The 1964 report by its own words was intended to be "prototype legislation applicable for use by both state and local governments establishing minimum standards for swimming pools." As mentioned above, it went on in its Forward to state his ordinance and these regulations, if enacted by a governmental jurisdiction, should serve to minimize the spread of infections, to reduce injuries

through elimination of hazards, and to promote public swimming pools as attractive and safe places for enjoyment, recreation, and physical fitness.

There does not seem to be any generally-known evidence that it ever got close to accomplishing its goal, except possibly in snippets by the country's reputed 3200+ local and state health agencies.

The 1964 report included the following language:

> "A vacuum-cleaning system shall be provided. When an integral part of the recirculation system, sufficient connections shall be located in the walls of the swimming pool, at least eight inches below the water line.
>
> A vacuum-cleaning system shall be provided. When an integral part of the recirculation system, sufficient connections shall be located in the walls of the swimming pool, at least eight inches below the water line" and,
>
> "*Cleaning Swimming Pools*
> Visible dirt on the bottom of the swimming pool shall be removed every 24 hours or more frequently as required. Visible scum or floating matter on the swimming pool surface shall be removed within 24 hours by flushing or other effective means."

As stated above, in 1970 the committee issued another report, still labeling them as "desirable and necessary suggested legislation to provide a uniform basis for control of the design and construction private Residential Swimming Pools." Perhaps with no basis in fact the committee excused this very short report by contending "The Joint Committee felt most government agencies do not have the authority to enforce operation and maintenance standards for private swimming pools and, of those that have the necessary legal power to do so, only a few have the resources to conduct programs of compliance." Given the above-referenced Police Powers Clause, namely the 10th Amendment to the United States Constitution which the courts have interpreted as giving the states the authority to police safety, health, welfare, and morals of its citizenry, one can only wonder why the committee came to such an unsubstantiated conclusion. In later years the enactment of fencing, alarms, diving boards and other health and safety regulations applying to private residential pools showed otherwise. However, there is no evidence any governmental or quasi-governmental agency has made any attempt to even proposed standards for private residential pools, which according to the pool industry consultants PK data, coincidentally located just as the CDC is in Atlanta outnumber public or commercial pools in this country about 20 to 1.

The last public recommendations were in 1981, which by then appeared to be nothing more than a last ditch attempt to go through the motions of the failed original intentions of the first committee. Once again, by 1957 the label "Standards" was long abandoned, replaced by either "Suggestions, or "Recommended Regulations." It was apparent by 1981 that the committee was far less forceful or

optimistic that whatever they published would be the basis for legislation but simply "recommended regulations." The report stated regarding the recommendations that "they should not be considered to be the 'final" word and only *encouraged "*Regulatory agencies wishing to enact more stringent minimum standards to achieve an even higher level of health protection, safety and well-being," "to do so."

69 years after the APHA addressed the issue of pool hygiene, 63 years after the committee was organized and 55 years after the first report, the only reference to cleaning or vacuuming was:

> "A vacuum cleaning system shall be provided to remove debris and foreign material which settles to the bottom of the swimming pool. When it is an integral part of the circulation system, a sufficient number of connections shall be located in the walls of the swimming pool, at least 8 in (20.3 cm) but not more than 12 in (30.5 cm) below the water line."

By then the CDC was founded (in 1946), followed by the Cabinet-level Department of Health, Education and Welfare (in 1953), now the Department of Health, and Human Services and its 11 operating divisions, the National Health Service Corps (in 1977) and along the way a variety of private and non-profit aquatic organizations such as the National Spa and Pool Association (in 1956), now the Association of Pool and Spa Professionals the National Swimming Pool Foundation (in 1965).

Testament to this failed effort was the plan adopted in 2007 to develop the MAHC following the CDC's 2005 workshop on recreational water illnesses. It is almost mind-boggling to realize that a full century after the groundwork was laid for the government intervention in the growing health concerns for the dangers for unmonitored aquatic environments, there still remains no uniform pool and spa health and safety code.

As will be demonstrated here at best all attempts to propose legislation were limited to a bare bones provisions that all public pools include a vacuum system. None of the reports and recommendations added any details regardless of the fact after the committee first met in 1918 that there were thousands, probably tens of thousands of patents and innovations in the industry over the succeeding ninety-one years in equipment to adequately and properly clean a pool and spa.

The National Swimming Pool Foundation includes links to the pool and bathing codes of every state. Some states include regulations and ordinances relating to pools in its building, health and safety, bathers and pool codes. The author has done his own research and on a state-by-state basis has scrutinized each and every state code and a myriad of local ones. Most have no rules relating to cleaning, much less vacuuming and cleaning or vacuuming equipment.

Among the states and jurisdictions that have codified the requirement of inclusion of an independent vacuum cleaner are these:

Alabama (Jefferson County Board of Health, Rules and Regulations Governing Design, Construction and Operation of Public Swimming Pools and Spas):

2.10 Vacuum Cleaner

"The vacuum cleaning system, including suction head and hose, shall be such that the total suction head loss will not exceed 15 feet of water at a flow of 4 gpm per lineal inch of suction cleaner head."

California:

2010 Title 24, Part 2, Vol. 2 California Building Code. Section 3140B, Cleaning Systems:

"A vacuum cleaning system shall be available which is capable of removing sediment from all parts of the pool floor. A cleaning system using potable water shall be provided with an approved backflow protection device as required by the California Department of Public Health under Sections 7601 to
7605, Article 2, Title 17, California Code of Regulations:

'No cleaning system shall operate in the pool when the pool is open or available for use by pool users. Built-in vacuum suction lines shall not be installed in the pool."

Florida:

Florida Department of Health section 64E-9.007 Recirculation and Treatment System Requirements

"(12) Cleaning system – A portable or plumbed in vacuum cleaning system shall be provided. All vacuum pumps shall be equipped with hair and lint strainers. Recirculation or separate vacuum pumps shall not be used for vacuuming purposes when in excess of 3 horsepower. When the system is plumbed in, the vacuum fittings shall be located to allow cleaning the pool with a 50 foot maximum length of hose. Vacuum fittings shall be mounted no more than 15 inches below the water level, flush with the pool walls, and shall be provided with a spring loaded safety cover which shall be in place at all times. Bag type cleaners which operate as ejectors on potable water supply pressure must be protected by a vacuum breaker. Cleaning devices shall not be used while the pool is open to bathers."

Delaware:

Delaware Health and Social Services Division of Public Health, Section 26.407 *Vacuuming.*
'All pools shall have the capability of vacuuming the bottom either through a skimmer, a separate vacuum fitting or a portable vacuum system. If a portable vacuum system must be used, it shall be stored on-site when the pool is open. Vacuuming through a portable vacuum system that is connected to the potable water supply shall be prohibited."

Michigan:

Michigan Public Health Code, Act 368

"Rule 63. A swimming pool owner shall provide a vacuum cleaning system that is capable of cleaning the swimming pool."

Nevada:

(Nevada) NAC 444.174 Vacuum cleaners. (NRS 439.200, 444.070) [Bd. of Health, Public Bathing Places Reg. Art. 28, eff. 5-21-74]—(NAC A 11-1-88)

"1. A vacuum cleaning system is required at each public bathing or swimming facility having a pool. It must be either a portable type or an integral part of the recirculation system.
2. There must be sufficient suction and capacity to remove all normal accumulations from the floor of the pool
3. If the vacuum cleaner is an integral part of the recirculation system, sufficient connections must be located in the walls of the pool, at least 8 inches (20 centimeters) below the water level. The vacuum cleaner may be connected to the skimmers
4. Water vacuumed from outdoor pools and from pools with considerable sediment must be discharged to waste.
5. Any visible dirt on the bottom or sides of the pool, and any visible scum or floating matter on the surface of the pool must be removed before the pool is used.

Rhode Island:

Rules and Regulations For Licensing Swimming and Wading Pools, Hot Tubs and Spas [R23-22-SWI/H&S]
State of Rhode Island and Providence Plantation Department of Health 8.17.1

'Provision shall be made for vacuum cleaning the bottom of the swimming pool. The suction from the recirculation pumps and sidewall vacuum or skimmer fittings may be utilized for this purpose.'

Utah:

Utah Administrative Code, R392-302-28. Cleaning Pools.

"(1) The operator shall clean the bottom of the pool as often as needed to keep the pool free of visible dirt.
(2) The operator shall clean the surface of the pool as often as needed to keep the pool free of visible scum or floating matter."

If the MAHC is to establish truly effective and credible guidelines for all the 3200+ state and local agencies that codify and enforce pool health, safety and operations in rules and regulations in general, it must not fall short of existing laws currently in force.

There must be uniform guidelines for the methodology and equipment relating to cleaning, brushing and vacuuming and the equipment a swimming pool.

WHY REGULATIONS RELATING TO CLEANING, VACUUMING AND CLEANING AND VACUUM EQUIPMENT ARE NECESSARY

The Myth of The Effectiveness of The Pool's Filter System

Even the most cursory training instructions and least in-depth service technician/operator certification programs emphasize the importance of proper filtration. Local and state pool codes include a glut of regulations about filtration requirements. Along with sanitation, user, structural and electrical safety requirements, circulation and filtration are of key focus. As explained above, the great majority of all public pools use high rate sand filters, with a porosity (the size of the openings that water will go through; larger particles are filtered) of 20 to 50 microns.

As the chart below demonstrates, the overwhelming number of dangerous contaminants and unsightly debris such as fine sand, silt, algae and bacteria are well below 20 microns in size. The majority of these pathogens (disease-causing organisms) are between 2 and 20 microns. For example, the single most-focused recreational water disease-causing pathogens focused on by the NSPF, and the CDC are Cryptosporidium and Giardia, which according to Duke University's Cruising Chemistry educational module, are 3-4 and 5-6 microns in diameter respectfully. E.coli, arguably the most generally known and feared pathogen found in pools, and along with that which causes Legionnaire's Disease, the only more prevalent one that has fatal consequences, is estimated to be 2 microns in length according to an article published by the American Ground Water Trust in the American Well Owner, 2002, Number 2.

While some of the most common pool contaminants such as viruses are below 2 microns, the majority can be filtered out with a filter that has porosity smaller than 20 microns, such as diatomaceous earth (DE) filters or most high-end robotic cleaners and some handheld-battery-powered pool and spa vacuums. But no regulation mandates there use.

Sanitation and oxidation will kill most of the pathogens, but their remnants still must be filtered out of the water. Here also lies a major misconception, namely that sanitizing a pool by adding disinfecting chemicals will remove the remnants of the killed pathogens. Overlooked is the fact circulating any chemical throughout the entire pool is a slow process that will take hours and hours in many instances. Those few code requirement that a pool cleaning system must have a vacuum available, and the ones that require brushing, another ambiguous, general regulation imply that this will be sufficient to rid the pool of dirt, debris and pathogens. That is but another misconception perpetuated or at least accepted.

The idea is that this debris on the walls, steps floors and everywhere else in a pool that static particles will adhere to, will be brushed into the water and then as it settles on the bottom be vacuumed into the filter system and be removed.

This means that brushing them from the pool surfaces and into the water, or those that naturally fall into the water will remain in the water after they flow through a sand filter. Therefore, despite all the precautions and strict regulations imposed by government authorities, pool codes which sometimes

approach 50 pages in length, there are no requirements for pools to use vacuums or filters that will remove any dangerous debris. The only way to remove this debris is to install a DE filter or use a vacuum with a small porosity. DE Filters are very expensive to purchase, very expensive to maintain, difficult and require manpower to inspect and clean. So it is counter-productive to replace a high-rate commercial sand filter with a commercial DE filter, and cost is the reason. But, the failure to vacuum debris and contaminants smaller than 20 microns is dangerous, and often deadly. While much unsightly debris such as algae and fine sand and silt is clearly observable, it cannot be removed without a small porosity vacuum or filter system. At best, it goes in one end and out the other, right back into the pool.

Common Items and their respective particle sizes

Eye of a Needle	1,230 microns	Mold Spores	10 to 30 microns
Silt and Sand	2 to 2,000 microns	Anthrax	1 to 5 microns
Human Hair	40 to 300 microns	Bacteria	.3 to 60 microns
Dust Mites	100-300 microns	Algae	.5 to 20 microns
Pollen	10-1000 microns	Cryptosporidium	1 to 5 microns
Face Powder	1-300 microns	E-Coli	E-Coli
Tobacco Smoke	0.01 to 1 microns	Typical Atmospheric Dust	0.001 to 30 microns
Coal Dust	1 to 100 microns	Spider Web	2 to 3 microns

Some of the more detailed codes do require a vacuum cleaner be kept poolside, without specifying the details of the required machine. Pool vacuums are either simply vacuum heads that are attached to a suction port in the pool wall that allows the pump to create the suction, or so-called "automatic pool cleaners." The latter are more prevalent in residential pools and come in three varieties, suction-side when connect to the influent side of the filter or pressure-side which connect to the effluent or return side. Neither is adequate for anything other than a tiny commercial pool. The third type is an electric robotic which is totally independent and can brush, vacuum, and some can scrub the water line and several b There are few if any established standards, much less regulations in regards to cleaning the pool. Manual vacuums and brushes are not regulated, and the industry manufacturing sales and use is dictated by the manufacturers. They periodically *invent* and offer new designs and materials used in brushes and vacuums that are not independent machines but actually vacuum heads that attach to and use the suction power and filtering abilities and capacities of the main filter and pump systems.

There being are no standards or regulations that dictate the minimum flow or porosity of the circulation and filtering system, and the most popular, type of pool filter is the high rate sand filter. Sand filtering was the first filtration method. It is by far the most economical. DE filtration is far more effective with porosities as low as 2 microns, ten times smaller than the best high rate sand filters, but cumbersome and arduous to use, inspect and clean and far more expensive to purchase and replace their parts. Cartridge filters, the preferred methods of filtering a spa are far more convenient, have smaller porosities than a sand filter, although larger than a DE filter, but very expensive and never used on a school pool.

The following comparison chart comparing functions, efficiencies and costs for a typical public pool, speaks volumes and eliminates any doubt what the options of cleaning a pool and removing physical

contaminants larger than the molecular level that is left to sanitizers, along with what works and what does not.

Functions	Manual Brushing and Vacuuming	Main Pump and Filter System Using High Speed Sand Filers w/ 2HP Pump	Suction Cleaners	Largest Robotic Cleaners	Handheld, Battery-Powered Vacuums
Ability To Remove Dangerous and Unsightly Debris and Contaminants between 2 and 20 microns	**NONE**	**NONE**	**NONE**	**HIGH**	**HIGH**
Porosity	**None Directly but limited To Capacity of Filter**	**20-50 microns**	**None Directly but limited To Capacity of Filter**	**2 microns**	**5-8 microns**
Direct Filtering Ability	**NONE**	**HIGH**	**NONE**	**HIGH**	**HIGH**
Brushing Ability For Visible Debris (over 20-40 microns)	**HIGH**	**NONE**	**NONE**	**HIGH**	**HIGH**
Brushing Ability For Invisible Debris (2-20 microns)	**NONE**	**NONE**	**NONE**	**HIGH**	**HIGH (over 5 microns)**
Ability To Clean Corners, Cracks and Crevices, Steps and In and Around Ladders	**LOW**	**NONE**	**NONE**	**LOW-MODERATE**	**HIGH**
Vacuuming Ability of Surfaces (walls, floors, steps, etc.)	**NONE**	**NONE**	**NONE**	**HIGH**	**HIGH**
Scrubbing of Water Line	**NONE**	**NONE**	**NONE**	**MODERATE** (For Walling-Climbing Models)	**MODERATE w/Attachment**
Maintenance Requirement	**LOW**	**HIGH**	**HIGH**	**LOW**	**VERY LOW**
Reduction or Elimination of Backwashing and Cleaning	**NONE**	**NONE**	**NONE**	**HIGH**	**MODERATE**
Electricity Cost per Year	**MODERATE**	**HIGH**	**HIGH**	**VERY LOW**	**NONE**
Labor Cost per Year for each laborer	**HIGH**	**MODERATE**	**LOW**	**NONE**	**VERY LOW**
ESTIIMATED ANNUAL COSTS	**$28,000** (Labor)	**$1,314** (Electricity)	**$500** (Electricity)	**$28.40** (Electricity)	**$10.00** (Labor)

Note: The foregoing Electricity Cost per year are based on average sized models, a single moderate-sized pool, national average of approximately $10 KWh electricity cost, national average and single stage pumps.

Robotic Cleaners:

* **Operate using a step-down transformer reducing current from 115 to a safe 24.**
* **The only labor necessary is to place in and remove from pool.**
* **Up to 1/100th daily electricity of a single phase pump**
* **Methodically through a computer guidance system clean up to 95% of the pool structure surface**
* **Require virtually no maintenance**
* **Vigorously brush, including walls and some steps of wall-climbing units**
* **Remove invisible debris including disease-causing pathogens, bacteria and algae, all which are under 20 microns in size and the vast majority between 2 and 20 microns, impossible to remove by a high rate sand filter.**
* **Radio remote directional control models are also available to target**

Battery-Powered, Handheld Spot Vacuums

* **Are lightweight and maneuverable and thus extremely portable.**
* **Use no operational energy and are powered by a long-life, environmentally-safe rechargeable battery and come with a fast charger that uses a few pennies to recharge.**
* **Are the only way to reach into and clean corners, crevices, in and around ladders and debris stuck in the openings of the main drains.**
* **Take moments to clean and easily attach to any standard telescopic pool pole for extended-reach cleaning**
* **Are the only mechanically-driven spa, hot tub, small fountain, kiddie and exercise pool vacuums.**

specific areas and fast clean-ups and to maneuver around obstacles.	

The Dangers Of Failure To Include The Proposed Regulations

With due respect, frankly probably not earned, the swimming pool industry and those responsive for the general health of the public has been highly remiss, If not outright negligent in rubber stamping (at best) antiquated information. As shown above, even the American Public Health Associations *intended* yeoman effort begun 100 years ago to respond to the need to target pool hygiene has failed miserably. The periodic reports its committee on bathing places drafted and published more often than not simply cut and paste earlier reports, some created and published more than a half century earlier. The Gage and Bidwell Laws of Dilution are typical examples of not only unsubstantiated and unsupported scientific data being simply passed on from generation to generation. In this writer's short book entitled *The History of Pool Clea*ners, the primary source material came from a detailed patent search going back to the formation of the United States Patent and Trademark Office in 1790.

In conducting reason for this writer's upcoming Filtration and Circulation book, it was discovered that before 1926 when the Gage of Bidwell *laws* were allegedly discovered, there were only a handful of U.S. patents issued for pool filters and pumps, and thousands thereafter. Obviously, in the 86 years since these laws were discovered technology advanced exponentially. How could the power of filter pumps in 1926 be relevant to the circulation of pool water in 2012? It is akin to testing a 20 HP 1926 Ford Model T to evaluate current automobile performances on a test track.

As mentioned above, the MAHC was conceived after the CDC held a workshop to target the growing threat of Cryptosporidium outbreaks. Yet if there are not more stringent rules for the porosity of high speed sand filters the code will be impotent to help prevent the disease by removing Crypto oocyst from the water.

It is a given that traditional disinfectants, namely chlorine are virtually ineffective in penetrating the walls of the oocyst which is so impenetrable that it can survive for hours in sulfuric acid. The 1926 report referenced above stated point blank that "the only satisfactory method of removing the dirt, hair, etc., settling on the bottom of a pool is by means of a suction cleaner." There is uniform agreement among those in the know that it is absolutely essential to vacuum a swimming pool. Other than obvious aesthetic reasons, common sense explains the need to remove dirt, algae, hair and other unsightly and germ generating contaminants.

Traditional Methods of Removing Cryptosporidium

It is well established in the scientific community that since Cryptosporidium is technically a particle, and one with such an almost impenetrable outer wall, it can only be removed by filtration. However according to a published report by the committee chairperson, Dr. James E. Amburgey, traditional filters are highly inefficient, at least high-rate sand filters which he states constitute the majority of filter types in public pools.

In **ARE SWIMMING POOL FILTERS REALLY REMOVING CRYPTOSPORIDIUM?** -James E. Amburgey, Jonathan M. Goodman, Olufemi Aborisade, Ping Lu, Caleb L. Peeler, Will H. Shull, Roy R. Fielding,

Michael J. Arrowood, Jennifer L. Murphy and Vincent R. Hill, Dr. Amburgey and his research team reported:

> "Cryptosporidium is chlorine-resistant protozoan parasite that causes the majority of waterborne disease outbreaks in swimming pools in the U.S. Recent research has shown that free chlorine can take more than 10 days to inactivate 99.9% of Cryptosporidium oocysts (Ct=15,300 mg/L*min) at pH 7.5 with 1 mg/L of free chlorine, but a lot of people can swim in a pool during that 10-day period. Sand filters are commonly used as secondary barriers to Cryptosporidium in U.S. pools, but sand filters alone typically only remove about 25% of oocysts per passage through the filter.
>
> Prior research has shown that sand filters can remove greater than 99% of oocysts per passage when a coagulant is added prior to filtration, but the results did not scale up to spa-scale or full-scale experiments. Poly-aluminum chloride and cationic polymers were shown to remove greater than 99% of Cryptosporidium-sized microspheres with filtration rates of up to 24 m/h and sand bed depths of 600 mm. Bed depth appeared to be more important than filtration rate in increasing particle removal."
>
> **"**Based on the slow kinetics of chlorine inactivation of Cryptosporidium, the known inefficiency of sand filter to remove oocysts, and the recent incidence of cryptosporidiosis in the U.S., additional measures appear necessary to effectively safeguard public health.
>
> Previous research has shown that sand filters can remove greater than 99% of oocysts per passage through the filter when a coagulant is added prior to filtration in lab-scale filtration systems, but the removals in full-scale trials with coagulation were only slightly higher than 25% (Amburgey et al., 2007). In later experiments, the removals in a spa-scale sand filtration system with coagulant addition only averaged 61% (Amburgey et al., 2009a)."

In **Efficiency of sand filtration for removing cryptosporidium oocysts from water.** P.A. Chapman and Barbara A. Rush, the authors concluded:

> "Cryptosporidium oocysts have been detected in water which has been adequately treated to remove bacterial and viral pathogens, and some workers have doubted the ability of sand filtration to remove oocysts effectively."
>
> **"**Cryptosporidium oocysts are resistant to many disinfectants, including chlorine at the level adopted because it is effective against bacterial and viral pathogens that may be present in drinking water. Therefore prevention of waterborne spread of Cryptosporidium relies on satisfactory filtration;
>
> However, assuming 100% efficiency of filtration and perfect circulation of water within a swimming pool, as many as 10 pool-turnover periods (the time taken to circulate one pool volume through the water treatment system) may be necessary to remove almost all particulate matter. While chlorination remains the generally preferred method of chemical disinfection, the risk of swimming-pool-associated

cryptosporidiosis or giardiasis can be reduced only by adequate filtration and short turnover periods for the pool water. "

In **Removal of Cryptosporidium and polystyrene microspheres from swimming pool water with sand, cartridge, and pre-coat filters,** Dr. Amburgey and his team **(**Kimberly J. Walsh, Roy R. Fielding and Michael J. Arrowood) reported:

"Cryptosporidium has caused the majority of waterborne disease outbreaks in treated recreational water venues in the USA for many years running. However, sand and cartridge filters had average Cryptosporidium removals of 0.19 log (36%) or less. The combined low filter removal efficiencies of sand and cartridge filters along with the chlorine-resistant properties of Cryptosporidium oocysts could indicate a regulatory gap warranting further attention and having significant implications on the protection of public health in recreational water facilities."

"Pool filters are commonly designed to keep swimming pools looking clear and pleasing to the eye (i.e., turbidity removal), which is not the same as for effective pathogen removal. The US swimming pool industry has traditionally relied on disinfectants, such as free chlorine, to control the spread of waterborne diseases. However, chlorine is inefficient at inactivating Cryptosporidium, so the burden of microbial safety falls on filtration. The drinking water industry also relied heavily on chlorine until chlorine-resistant pathogens forced changes in the 1980s (for Giardia) and the 1990s and beyond (for Cryptosporidium). These chlorine-resistant pathogens forced the drinking water industry to put considerable regulatory emphasis on filtration optimization to achieve physical removal of these pathogens. US drinking water regulations have become increasingly stringent on pathogen removal in recent years in order to safeguard public health. The swimming pool industry could be forced to take the same approach. Constantly optimizing coagulation and closely monitoring filtered water turbidity might not be the most practical approach for the majority of US swimming pools.

"The coagulation conditions are mostly poor in pool filter arrangements and flocculation time too short. Therefore the flocs do not have time to form and the particles are neither neutral nor large enough to filter well." Swansea University, infra.

Dr. Amburgey in the article above also questioned if coagulation and flocculation will significantly solve the problem of sand filter inefficiency in removal of Crypto:
"Coagulation prior to sand filtration is one technique that warrants further study since it is required prior to sand filtration in drinking water treatment operations throughout the world as well as in the majority of European public swimming pool facilities. While there are no obvious barriers to coagulation prior to sand filtration, there is a significant lack of comprehensive data regarding the current filter design and operating practices in the USA. The size and depth of filter media, filter loading rates, and backwashing practices are known to have significant impacts on filter performance, but accurate values for these parameters are not currently available to regulators, researchers, and pool designers. Or even filter manufacturers."

In another article credited to Dr. Amburgey **("Rapid sand" filter would provide safe drinking water to millions in developing countries "** Saturday, March 7, 2009) he reported he has developed a chemical pretreatment scheme based on ferric chloride and a pH buffer that is added to the water.

> "In its natural state, Cryptosporidium is negatively charged, as are sand grains, so they repel one another."

In **Removal of Cryptosporidium and polystyrene microspheres from swimming pool water with sand, cartridge, and precoat filters**, James E. Amburgey, Kimberly J. Walsh, Roy R. Fielding and Michael J. Arrowood, IWA Publishing 2012) it was reported:

> "sand and cartridge filters had average Cryptosporidium removals of 0.19 log (36%) or less."
>
> Unlike sand filters, DE filters rely dominantly on the size exclusion principle to prevent pathogens from passing through the tiny pores in the DE media. This is why sand filter media depths are a minimum of 0.25 m (and commonly called 'depth filters') while DE media depths are only 1.6–3.2 mm because they are 'surface filters'.
>
> When a coagulant is used, it is often in response to a real or perceived water quality problem. Coagulant usage guidelines are not well-established, and the directions on the bottle tend to be vague about the manner of application and frequency of use. While the ingredients and formulation information are proprietary, the primary active ingredient is a cationic polymer."

The CDC's 2005 workshop and the fact that 12 years later and 5 after it began efforts to create the MAHA, demonstrates that this country may have been and still is behind the 8-ball in taking the Cryptosporidium problem serious enough.

Efforts in Australia and the United Kingdom have been ongoing for years on the issue

Swansea University, a university located in Swansea, Wales, United Kingdom published a study *Optimisation of pool water filtration for Cryptosporidium oocyst removal and new research from Swansea University*, by B T Croll, C R Hayes, C J Wright, S Williams and D. Rowlands. They concluded:

> "Ozone, chlorine dioxide and UV may be effective for inactivating oocysts but different methods of judging inactivation give different results. Origin in swimming pools most commonly due to fecal incidents: 100g feces can contain 108 to109 oocysts."

And provided this analysis:

> "Attachment/Detachment mechanisms
>
> <u>Attachment</u>.

Natural particles (including oocysts) and sand surfaces have a negative charge and therefore repel. Neutralize or turn into attraction by coating particles and sand surface with positively charged coagulants

Detachment

Viscous shear of the water passing through the filter.
Water velocity increases as the filter blocks and the voids between the sand grains become smaller. Rapid changes in flow rate increase the effect."

They too question the effectiveness of coagulation:

"The coagulation conditions are mostly poor in pool filter arrangements and flocculation time too short. Therefore the flocs do not have time to form and the particles are neither neutral nor large enough to filter well."

Their report included this chart that demonstrates some of the problems with sand filtration:

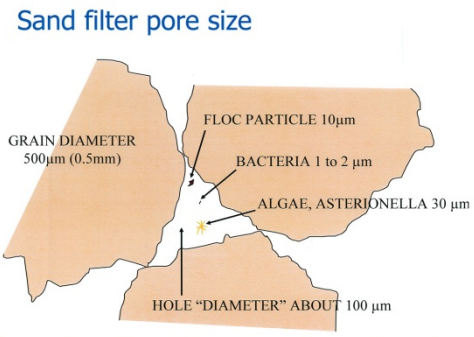

This writer recently authored an article entitled The Myth of Filtration Effectiveness that was published in Aqua magazine on May 4, 2012 stating:

"It is estimated by industry sources and these programs that the great majority of all commercial (technically public) pools use high rate sand filters, with a porosity of 20 to 50 microns. There is a growing trend toward using diatomaceous earth (DE) filters with porosities below 5 microns, but they are extremely expensive to purchase and maintain. Certainly, all older public pools most often use high rate or their far less efficient predecessor, rapid rate sand filters

The overwhelming number of dangerous contaminants and unsightly debris such as fine sand, silt, algae and bacteria are well below 20 microns in size. The majority of these pathogens (disease-causing organisms) are between 2 and 20 microns. For example, the single most-focused recreational water

disease-causing pathogens focused on by the NSPF, and the CDC are Cryptosporidium and Giardia, which according to Duke University's Cruising Chemistry educational module, are 3-4 and 5-6 microns in diameter respectfully. E.coli, arguably the most generally known and feared pathogen found in pools, and along with that which causes Legionnaire's Disease, the only more prevalent one that has fatal consequences, is estimated to be 2 microns in length according to an article published by the American Ground Water Trust in the American Well Owner, 2002, Number 2.

While some of the most common pool contaminants such as viruses are below 2 microns, the majority can be filtered out with a filter that has porosity smaller than 20 microns, such as diatomaceous earth (DE) filters or most high-end robotic cleaners and some handheld-battery-powered pool and spa vacuums. But no regulation mandates there use.

Sanitation and oxidation will kill most of the pathogens, but their remnants still must be filtered out of the water. Here also lies a major misconception, namely that sanitizing a pool by adding disinfecting chemicals will remove the remnants of the killed pathogens. Overlooked is the fact circulating any chemical throughout the entire pool is a slow process that will take hours and hours in many instances. The code requirement that a pool cleaning system must have a vacuum available, and the ones that require brushing, another ambiguous, general regulation imply that this will be sufficient to rid the pool of dirt, debris and pathogens. That is but another misconception perpetuated or at least accepted.

The idea is that this debris on the walls, steps floors and everywhere else in a pool that static particles will adhere to, will be brushed into the water and then as it settles on the bottom be vacuumed into the filter system and be removed.

One problem with this is that all that will be removed are those particles that are larger than the porosity of the filter. At best in sand filters, it goes in one end and out the other, right back into the pool continuing to expose bathers."

Some observers and readers argued that porosity alone is not the solution and that surface charge and the availability of zeolite media, flocculants and coagulants may be sufficient to overcome large porosity sand filters. But the data above debunks but another ignoring of the problem by the industry.

As stated above, circulation is important, but in some instances it may take up to ten six hour turnovers to filter 99.9% of the pool water according to the Gage and Bidwell reported analysis. In the In 1926 in report by Joint Committee on Bath Places of the American Public Health Association (APHA and the Conference of State Sanitary Engineers at the APHA's 56th Annual Meeting cited above author Stephen DeM. Gage, Chairman of the Public Health Engineering Section of the APHA wrote:

"It can readily be demonstrated by computation and by experiment that 7 turnovers are required to effect a removal of 99.9 per cent of the dirt present in the water of the pool when recirculation was started. At the end of the first turnover the purification will be about 63 per cent, after two turnovers about 86 percent, at the end of three turnovers about 95 per cent, after four turnovers about 98 per cent, after five turnovers 99.3 per cent, and after six turnovers 99.7 per cent. To accomplish a purification of 99.99 per cent 10 turnovers will be required."

All of these factors prove that to rely on traditional pool filtration poses a great danger to the public, especially in light of the fact that some experts have concluded as little as a single Crypto oocyst can infect and a single incident of diarrhea can release from 100 million to billions of oocysts.

Conclusion:

Alternative methods of filtration are necessary, IF the technology exists. It does!!!

Recently in Florida another health and safety issue arose because a newly discovered hazard caused by not an uncovered main drain, but the openings of the vac port as reported in Pool & Spa News, the industry's bible (Florida Code May 'Create Hazards,' Erin Ansley, July 19, 2012):

> "Currently, sections .64E-9.007(8) and (12) of the decades-old state code, 64E-9 Public Swimming Pools and Bathing Places, read: "The filter and vacuuming system shall have the necessary valves and piping to allow filtering to pool, vacuuming to waste, vacuuming to filter. … A portable or plumbed in vacuum cleaning system shall be provided. ... Recirculation or separate vacuum pumps shall not be used for vacuuming purposes when used in excess of 3 horsepower."
>
> The root problem with this mandate is that it requires a "known hazard," particularly in pools where there are no lifeguards on duty or scheduled inspections by the operator, Barnes said. According to the code, the opening of the vac port is supposed to be sealed by a self-closing, self-latching cover. However, the cover reduces the size of the opening in the wall, and a commercial-sized vacuum hose doesn't fit.
>
> As a result, the service technician or the individual cleaning the pool has to remove the fitting to attach the hose and then replace the fitting when he or she is finished vacuuming. However, the fitting isn't always put back on — in fact; it's not unusual for an operator to leave them off completely."

It was reported that Steve Barnes, chairman of the Association of Pool & Spa Professionals' Technical Committee, and safety and compliance manager at Pentair Aquatic Systems, stated:

> ""We see these ports missing covers all over Florida," Barnes said. "Under code, the pools are supposed to be vacuumed every day if it needs it, and it's a pain in the neck to undo the set screw that locks it in place."

Others have urged policy makers and health code enforcers to utilize the latest technology available. A major technology in fact technology in fact is the use of robotic swimming pools cleaners and handheld micro filtering vacuums which this writer has reported in his work on the *History of Pool Cleaners* has been around for just about 50 years (robotic cleaners) and 10 years (handheld vacs) respectively.

Uncovered vac ports may not be considered a major health and safety problem, but certainly is another of the many that require stringent regulations for the use of modern pool cleaning methodology and machinery.

INCLUSION OF A REGULATION REQUIRING POOL CLEANERS AND VACUUMS HAS OTHER MAJOR HEALTH BENEFITS.

An improperly cleaned pool allows dangerous contaminants to remain in the water after it passes through any sand pool filter. The majority of public swimming pools use a combination of high rate sand filters and manual brushing and vacuuming to clean a pool. These sand filters are less expensive than a DE filter to purchase, to maintain, to repair and to operate. As stated above, they can only remove debris larger than the human eye can see, 20-50 microns. On the other hand most dangerous pathogens and bacteria and unsightly algae is far smaller, the majority probably between 2 and 20 microns in particle size. The pool operator relies solely on sanitation to break down and remove these smaller contaminants, as all filter systems unless they are diatomaceous earth (DE) filters which can filter out particles as small as 2-4 microns simply are inadequate.

There are several problems with this:

(1) **Most of the day, the pool is not properly maintained**. Other than pools with state-of-the-art automatic controllers that monitor and can correct water imbalance, sanitation, lights, pumps, heaters, modes (between spas and pools) and valve actuators, even the most responsible pool operators monitors proper sanitation more than a few times per day, some at far greater intervals. A pool that is used during the summer time when no use of the pool and bather loads is at its maximum operates at least 12 hours, and sometimes 24 hours a day. In between the sanitation checks and corrective measures, the user is exposed to whatever is floating in the water or attached to the pools walls, steps, floors, cracks, crevices and corners;
(2) **Filter Systems do not clean the entire pool**. They primarily draw water from the surface and floor of the pool;
(3) **Filter Systems do not brush and vacuum a pool**. The walls, steps, floor and hard-to-reach areas of the pool must be continuously brushed to released contaminants into the water, where dirt, leaves, and even microscopic debris are then sucked into the skimmers or after settling to the pool floor, into the bottom drains almost always in the deepest end of the pool;
(4) **Manual Brushing is inadequate**. It is virtually; if not literally impossible to regularly brush the *entire* surface of the walls, floor and other areas of the pool where the debris sticks manually, there is simply too much area to cover. But even if it was possible, workers are limited to what they can see, and few if any will take the time to clean what appears to be a dirt-free portion of a pool wall or floor.

Simply put, a public or any other pool that does not have a DE filter or is not cleaned with a robotic cleaner with a micro filter exposes every user to dangerous contaminants.

The NSPF, the world leader in training and certifying operators recommends that every commercial pool be operated and maintained by a Certified Pool Operator (CPO). Today all commercial or public pools (those open or accessible to the public) are required by 26 states to be cleaned and maintained by a certified operator or service technician. It is a wonder the other 24 states are so lax not to adopt the same requirements. Those that have adopted pool codes, sometimes in the form of health and safety codes and regulations, including the Model Aquatic Health Code (MAHC) being developed by the Center For Disease Control intended to have enacted into law a national standard, include many aspects of aquatic health and safety. They cover structural, electric, management, sanitation, risk plan

management and recirculation and filtering systems. The main focus of the CLPS and this work is on none of these other than the inadequacies of the regulations relating to recirculation and filtering, but the all-important, equally if not more important aspect of proper cleaning of a pool or spa.

Few individuals responsible for cleaning a pool, particularly a public pool are properly trained in state-of-the-art, state-of-the-science pool cleaning equipment or techniques. Most are unaware of the most up-to-date equipment. These individuals are supervised and regulated only by their managers, who for the most part do not themselves possess the education and skills to properly clean a pool on their facilities. Even most certified pool operators, regardless of the level of certification possess this expertise. The NSPL has two levels, a Certified Pool Operator (CPO) and a Certified CPO Instructor. The APSP has three levels, a Certified Pool Maintenance Specialist, a Certified Pool Service Technician and a Certified Pool Service Professional, the latter the highest classification by any sanctioning organization. To achieve any of these certifications does not require much knowledge of how to clean a pool, other than an almost incidental mention in their training materials, including the APSP's 461-page Service Tech Manual that is used for all of its certification levels. The latter devotes less than a ¼ page to robotic pool cleaners, focusing only on their electrical specifications. Nowhere in this entire manual is there any mention of porosity, (the size of the holes in a filter that debris can pass through).

As stated above, appearance is vitally important to a public pool. Owners and operators sometimes spend millions of dollars on designing them (many larger resorts have numerous pools and spas; La Quinta Resort and Club in Palm Springs, California at last count has 42 pools and 54 hot spas). In order to maintain their appearance requires continuous brushing and regular vacuuming. Probably more than any other swimming pool in general, a school pool must not only look, but be crystal clear and free of all dirt and debris. Anything less reflects poorly on the entire facility.

Manual Brushing and Vacuuming Is Utterly Inefficient and Ineffective … And Inexcusably Expensive

A research study by the CPLPS has concluded that a percentage of all public pools and as high as over 99% of all lodging pools are manually brushed and vacuumed. Before even considering the effectiveness of a filter system that is discussed above, it is indisputable that a pool must be brushed and vacuumed. The states with the detailed regulations clearly require the removal of dirt and debris from the pool floor, the reason why they also require separate pool vacuums be kept near the pool that are either self-sufficient or operate in conjunction with the main pool pump and filter.

A pool, particularly an outdoor pool is subject to the elements. Ever sit by a window with beams of sunlight shining through? One can then see that the air is full of dust and particles. Wind not only is the main cause of evaporation but carries dirt, dust and anything that is not tied down into the atmosphere and on the ground that it passes over before what it contains settles in a pool.

Particles attract to each other by a process generally called *adhesion*. Entire particles and the molecules within them are attracted to each other through *cohesion bond*. The same process works in these small particles in the air as they descend toward a pool, which in the warmer climates of the west are also drawn to the cooler water in a pool. As they fall into the pool, a portion of them adhere to the pool walls. Those that actually reach the water attach to the subsurface walls, steps, floors, in cracks, crevices or corners. Concrete, Gunite and other hard-surfaced pools wear out and are

scratched over time, creating mini cracks which debris, included germs and other dangerous particles get trapped in. Surface tension creates an invisible barrier that holds them in place.

People themselves, (bather-load) deposit more contaminants to the pool. It is on their bodies, and since most bathers and swimmers obviously enter the pool barefoot, the oils in their skin also cause adhesion with everything they walk over, such as decks and the ground outside of the deck, which then also attach to these surfaces. As a result all this debris, some of it algae and much of it microscopic, cling to all surfaces above and below the water and can only be removed by consistent and thorough brushing, which is rarely if ever done.

It will remain in place until it is brushed and gravity then draws it into the water. Below the water the debris brushed from the walls and steps eventually settles on the pool floor and on the walls. Skimmers obviously draw a high portion of the surface debris, but a much lower percentage of that below the surface. Much, but not all of the debris winds up on the surfaces of the pool below the water, with the greatest concentration on the floor. The same adhesion principal applies to the debris that clings to the floor, requiring more brushing into the main drain.

At best only a portion of all of this debris is suspended in a compact area in the water as it floats in all directions. The point of suction of the surface skimmers and below surface main drains is usually only within a short distance from the points the filtered water returns to be the pool, but as water is drawn into the skimmers and drains, it creates a vacuum that water molecules above and behind it fill, and a flow is created. Of course since the water is suctioned into the filter system through the skimmers on the top of the water and main drains on the bottom, it is unlikely that the water in between is filtered as often, meaning suspended particles, especially microscopic ones that include dangerous pathogens, remain exposed to the bathers and swimmers.

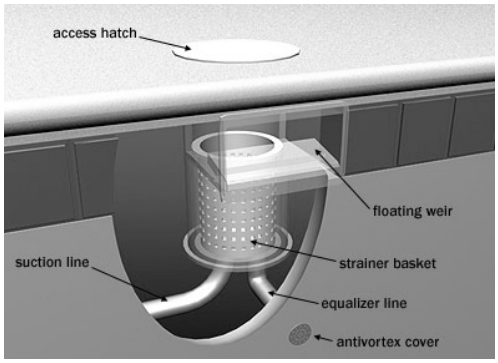

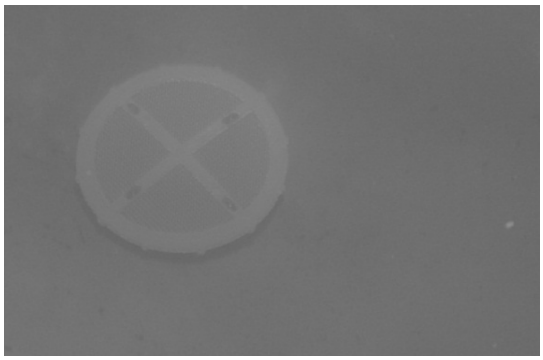

Water is usually drawn into the filter system from skimmers near the surface and main drains in the floor. A vacuum is created when the pump is turned on, creating a void that the closest water is drawn into. If the average depth of a public pool is 7.5’ the chances of the water being drawn from anywhere near the center of the pool is far less.

Power-driven vacuums with rotating brushes are necessary in order to remove the debris that sticks to the walls, steps and floors, especially the more stubborn debris. The longer this debris is on the surfaces, the more difficult it gets to remove, and the only alternative may be to use a lot of elbow grease and a wire brush to scrub it off.

Much like sweeping a floor inside the house with a broom, it will only gather up larger debris, requiring the use of vacuum cleaners to capture the rest. There is this same need in a pool. Attaching a vacuum head with a long hose to a dedicated suction port on a pool wall or somewhere else near the filter

system is almost never done during the daytime, and many facilities do not even vacuum a pool on a daily basis. So, again the time when there is most bather load is the time when the pool is almost never vacuumed. The only practical commercial automatic pool cleaners on the market are electric robotic machines. Yet, research and studies have shown that as few as 1% of all lodging pools are cleaned with a robotic pool cleaner. This means that they are cleaned and vacuumed manually, which is ineffective and very time-consuming. As mentioned above, the human eye is unable to see anything smaller than two microns. But even if some Superhuman with extraordinary vision could be found, he would have to move at supersonic speed to thoroughly brush and then vacuum an entire pool, not only once but over and over again.

Many educational institutions have large pools, at least as big as the so-called Junior Olympic Pool, usually 75' X 25'. Some with more advanced competitive programs have larger ones, as long as 162' (54 years, 50 meters) to as much as 328' (109 yard, 100 meters long, width determined by the number of swimming lanes. The Junior Olympic size pool would have approximately 1845 square feet floor surface and another 1,500 sq. ft. of wall surface if the average depth was 7.5 feet. Thus the entire pool having to be brushed just once would be 3,345 square feet of surface, not counting steps, swim-outs, ledges, etc. If this was a flat square surface it would be the equivalent of a square room about 57' X 57'. To brush and vacuum even a flat surface using a brush and small vacuum head would obviously take quite a while, especially if the floor was porous as are all school pools, and even more difficult if the debris clung to it, also the case with a school pool. On top of that if the floor was under water, the task would be far more arduous. And finally, if 35% of the surface was vertical it would be ever more difficult. Add to this the time it takes to clean the difficult-to-reach areas of the pool and just how time-consuming it will be, is obvious.

Brushing and periodic vacuuming is required by law in many states, but with minimum specifics. But, law or no law, adequate and continuous brushing of a school pool, numerous times during a day, encompasses hours and hours of manpower. In order to properly and safely clean even a modest-sized school pool, it is impossible to rely solely on manual brushing and vacuuming. In addition, to do so is dangerous. Not for what is removes, but for what it misses. We live in a modern, technologically-advanced society where today virtually everything is automated, and such automation is universal in most industries with most products. We no longer dial telephones that are connected by wires to a wall. We do not stand up and walk over to a television to change the few channels that were available only a generation ago. We are not even reading many books the old fashioned way. Yes, everything is automated and universally-accepted.., except in the swimming pool and spa industry.

In The *History of the Pool Cleaner*, the author traced the first 100 years of the pool cleaner. 100 years later, and still almost all school pools are cleaned and vacuumed by hand. In 1912 the Titanic sunk. The Model T Ford was far and away the most popular automobile, four years after it was introduced with 15 years still to go. Trains were powered by sooty coal engines. The A*ero plane* was still made of paper and wood. Radio and television were years away from popularity. Imagine if we never made any progress in those areas? But, we are still cleaning pools the way we did before Pittsburgh's, local citizen, John M. Davison, submitted an application of a "Cleaning Apparatus For Swimming Pools And The Like."

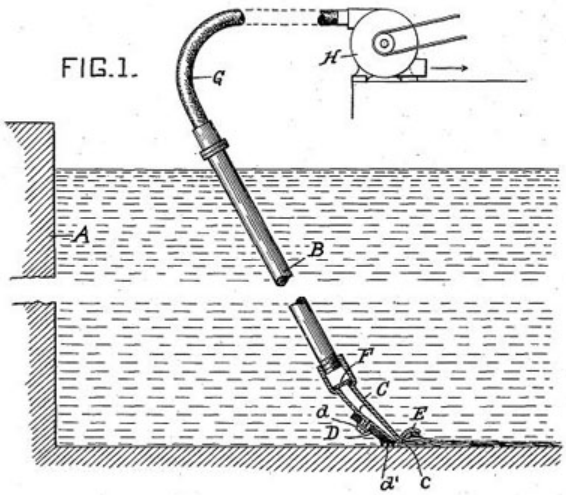

Dawson's 1919 "Apparatus for Swimming Pools and The Like"

Let's say that we are dealing with a very small school pool, perhaps the kind one sees in a small motel, but one that is subject to constant use by guests, and must be scrupulously maintained. Assume that the operator hires someone at the federal minimum wage of $7.25 per hour to make sure that throughout the day, as the atmosphere and bather load contaminates the pool, the pool is continuously brushed, including the floor, steps and occasionally the walls unless the pool is covered during the evening, not a usual occurrence in the summertime, the pool will continue to gather dirt and dust throughout the night, albeit at a lesser pace than during the daytime. So even if the pool is continuously brushed and occasionally vacuumed for 10 hours a day, the other 14 hours it will just get dirtier and dirtier.

Regardless, there are no regulations that require the details of brushing, and few that require vacuuming. Those that do require vacuuming are ambiguous without any specificity. Brushing and most vacuuming throughout the day under the directives and directions of a pool operator are aesthetic and thus economically-motivated to create the perception and appearance that the pool is clean. However, remembering that the human eye is unable to see any particles less than 20 microns and those most dangerous contaminants are far smaller, this perception is obviously wrong.

Depending on the design and size of a pool, its geographic location on the facilities property and the facility's own geographic location, along with pool operator preferences and standards, the number of brushings and vacuuming and the manpower needed on a daily basis vary widely. It is obvious that some school pool operators elect to have their pools brushed and even vacuumed throughout the day, and in some cases this requires several employees to be working simultaneously, depending on the all factors. But in our example, it is only brushed over a period of ten hours in a day. The worker is paid $72.50 for his day's work, and there is no weekend respite, so the cost to the operator or owner is $507.50 a week, or $26,390 a year.

The largest hotel management company is reportedly Interstate Hotels and Resorts with over 300 managed properties, but that pales in comparison to InterContinental Hotels and Resorts which own as many as 4,500 properties. Using a robotic pool cleaner will not only remove far more contaminants than will the combination of manually brushing a pool and then simply letting the main filter system filter out the debris, but most of the contaminants the system is incapable of removing from the pool. Again, most school pools use high rate sand filters which have a range of a filtering ability of 20 to 50 microns. In other words, the very best of them which can filter out debris and contaminants of 20

microns are incapable of filtering any particle smaller than 20 microns, the limit of which the human eye can see OK (or brush from) a pool. Smaller debris, such as bacteria, algae and cryptosporidium can never be removed in the traditional manner. However, a robotic pool cleaner will brush a pool ten times faster than can be accomplished manually and remove debris as small as 2 microns, meaning it will remove the majority of these RWD pathogens.

If the average InterContinental hotel employs only one individual to brush its pool, and that person is paid the federal minimum hourly wage rate of $7.25, and works only 10 hours a day, the cost would be $72.50 per day for every day of the year, or $26,390 annually. If every one of its hotels also employed such an employee, the cost would be an incredible *$118,755,000* a year. Considering the use of a robotic pool cleaner totally eliminates manual brushing and will brush and vacuum the entire pool and remove debris that the filter is incapable of at the same time, it would be an interesting argument to make to the company that anything else makes sense.

Manually brushing, skimming and vacuuming a pool are slow and laborious, and not only misses a significant portion of the walls, steps and floor, but literally any dangerous microscopic debris. Whatever is brushed off falls into the water, which is then brushed into the main drain and vacuumed into the filter system. If the filter system is a high-speed sand filter, any microscopic debris will go right through it back into the pool. A hot or cold school spa on the other hand cannot be effectively brushed or vacuumed at all, except when using a power-driven small handheld vac.

Both A Robotic Cleaner and Handheld, Extended Reach Vacuum Are Needed

Since both Cryptosporidium and other pathogens are negatively charged, as are the surfaces of pool, they concentrate primarily in the water. However, many contaminants can also attach or cling to the walls, in and above the water surface, the floors, on, in and around ladders, steps and stairs and in tiny cracks and crevices. Here also can lurk the deadly Cryptosporidium.

This excellent, information article was recently published by the Professional Pool Operators of America:

“BIOFILM- A Nasty that's in your POOL!

A biofilm is a structured community of microorganisms encapsulated within a self-developed polymeric matrix and adherent to a living or inert surface. Biofilms are also often characterized by surface

attachment, structural heterogeneity, genetic diversity, complex community interactions, and an extracellular matrix of polymeric substances.

Single-celled organisms generally exhibit two distinct modes of behavior. The first is the familiar free floating, or planktonic, form in which single cells float or swim independently in some liquid medium. The second is an attached state in which cells are closely packed and firmly attached to each other and usually form a solid surface. A change in behavior is triggered by many factors, including quorum sensing, as well as other mechanisms that vary between species. When a cell switches modes, it undergoes a phenotypic shift in behavior in which large suites of genes are up- and down- regulated.

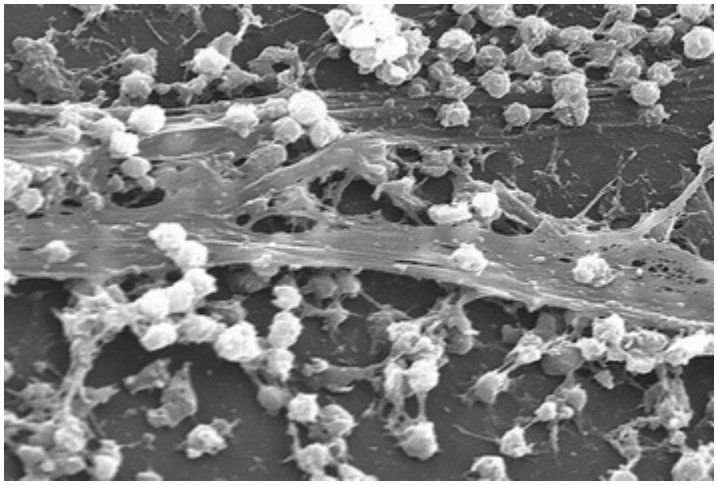

Formation

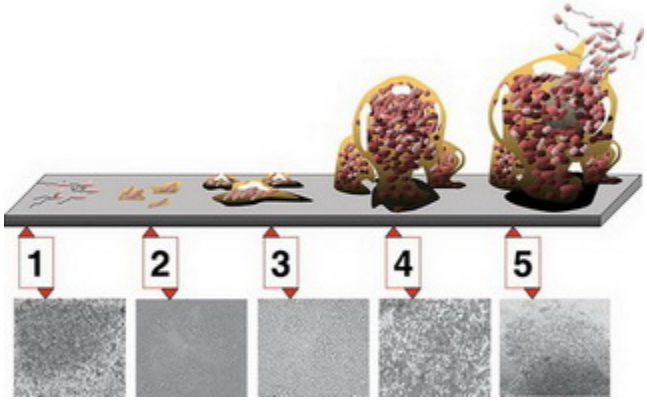

5 stages of biofilm development. Stage 1, initial attachment; stage 2, irreversible attachment; stage 3, maturation I; stage 4, maturation II; stage 5, dispersion. Each stage of development in the diagram is paired with a photomicrograph of a developing P. aeruginosa biofilm. All photomicrographs are shown to same scale.

Formation of a biofilm begins with the attachment of free-floating microorganisms to a surface. These first colonists adhere to the surface initially through weak, reversible van der Waals forces. If the

colonists are not immediately separated from the surface, they can anchor themselves more permanently using cell adhesion structures such as pili.

The first colonists facilitate the arrival of other cells by providing more diverse adhesion sites and beginning to build the matrix that holds the biofilm together. Some species are not able to attach to a surface on their own but are often able to anchor themselves to the matrix or directly to earlier colonists. It is during this colonization that the cells are able to communicate via quorum sensing. Once colonization has begun, the biofilm grows through a combination of cell division and recruitment. The final stage of biofilm formation is known as development, and is the stage in which the biofilm is established and may only change in shape and size. This development of biofilm allows for the cells to become more antibiotic resistant.

Properties

Biofilms are usually found on solid substrates submerged in or exposed to some aqueous solution, although they can form as floating mats on liquid surfaces and also on the surface of leaves, particularly in high humidity climates. Given sufficient resources for growth, a biofilm will quickly grow to be macroscopic. Biofilms can contain many different types of microorganism, e.g. bacteria, archaea, protozoa, fungi and algae; each group performing specialized metabolic functions. However, some organisms will form monospecies films under certain conditions.

Researchers from the Helmholtz Center for Infection Research have found the strategies used by biofilms. They discovered that biofilm bacteria apply chemical weapons in order to defend themselves against disinfectants and antibiotics, phagocytes and our immune system.

The lead researcher, Dr. Carsten Matz, began a serious investigation in order to find why phagocytes cannot annihilate the biofilm bacteria. He analyzed the marine bacteria, which defend themselves against the amoebae, the behavior of which copies the behavior of phagocytes. The amoebae behave in the sea just like the immune cells in human body: they search for and feed on the bacteria. When bacteria are alone and separated in the water, they become an easy catch for the attackers. However, when they attach to a surface and join other bacteria, the amoebae cannot assault them.

The researcher stated that biofilms may be seen as a source of new bioactive agents. When bacteria are organized in biofilms, they produce effective substances which individual bacteria are unable to produce alone.

Extracellular matrix

The biofilm is held together and protected by a matrix of excreted polymeric compounds called EPS. EPS is an abbreviation for either extracellular polymeric substance or exopolysaccharide. This matrix protects the cells within it and facilitates communication among them through biochemical signals. Some biofilms have been found to contain water channels that help distribute nutrients and signaling molecules. This matrix is strong enough that under certain conditions, biofilms can become fossilized.

Bacteria living in a biofilm usually have significantly different properties from free-floating bacteria of the same species, as the dense and protected environment of the film allows them to cooperate and interact in various ways. One benefit of this environment is increased resistance to detergents and antibiotics, as the dense extracellular matrix and the outer layer of cells protect the interior of the community. In some cases antibiotic resistance can be increased 1000 fold."

This paper has rationally demonstrated the limitations of relying solely on the pool filter system to effectively remove microorganisms smaller than 20 microns, even with the use of flocculants and coagulants. In the 1926 report by the American Public Health Association committee on pool hygiene, supra, probably the leading expert on water treatment of the day and longtime chairman of the committee Stephen DeM. Gage its author strongly advocated the use of a "suction vacuum." (It is noted that a suction vacuum or what today is referred to as a "suction side vacuum" of the time was not quite different than today's version. In this writer's The History of Pool Cleaners he explained that the first modern suction side cleaner was not patented until 1956.

Today all commercial pool cleaners are independent electric robotic. Therefore, all regulations in force by the limited number of state and local health agencies that require the use of an independent vacuum if they are alluding to a suction type for a public pool are illusory. These regulations must then be interpreted to mean the use of a robotic or other independently-operated vacuum cleaner, generally referred to as a "pool cleaner" which they are referred to here, while the term *vacuum*, *vac*, or *vacuum cleaner* is refers to handheld, extended use battery-powered vacuum cleaner.

With all the necessary benefits derived from a robotic cleaner, they have their limitations. The model below made of Water Tech Corp of East Brunswick, New Jersey is a residential cleaner. It and several other manufacturers offer a full line of commercial robotic cleaners, but they all have the same basic characteristics:

(1) Powered by a low voltage electric motor;
(2) Totally independent from the main pool filter system;
(3) On-board, debris catching micro filter bag (in some models);
(4) Rotating brushes, cylindrical rubber or composite rollers;
(5) Able to brush and vacuum a wide path;
(6) Able to climb walls and with some models the ability to scrub the water line.

Their width limits their ability to climb and clean many steps, particularly those which are narrow or have rounded surfaces and arcs. They cannot negotiate ladders or some other obstacles, swim outs, tight corners and are unable to remove debris from cracks and crevices. They also require 1-7 or more hours to operate.

The solution is a handheld, extended reach, battery powered vacuum, such as the ones shown below.

It allows the individual assigned to clean a pool or spa to reach literally every portion of the pool or spa that a robotic cleaner cannot. And, often this is where the microscopic contaminating organisms lurk in biofilm. Some models have brush attachments that allow the walls above the water line and the water line itself to be scrubbed.

A Peripheral Benefit, Energy Savings:

While the CDC and its MAHC is meant to increase the health and safety of the aquatic environment, it would be remiss not to also consider the environmental impact benefits a responsible code can bring, especially in regards to the use of low energy using robotic cleaners and battery-powered vacuums.

A year-long study in 2009 by California's Pacific Gas & Electric concluded that the use of robotic pool cleaners can reduce electricity cost by up to 90%, vital in that state where electric rates are almost double the national average. And while many state regulations, taken almost chapter and verse from those passed by the United States Environmental Protection Agency and other federal agencies require a school pool to be able to recirculate the water in the pool at least once every six hours, and run from about 15 to 24 hours a day, the use of robotic pool cleaners can be effectively used in smaller pools and to reduce the exact nature of how the main filter pumps are used. The codes usually require brushing and vacuuming to remove accumulated debris. Some require the availability of a vacuum cleaner. Other than an independent, powerful, computer-guided robotic cleaner, no other so-called automatic cleaners are practical for school or any other commercial pool. Attaching a vacuum head by a long hose to a suction port in the pool wall or skimmer requires manpower to install and use,

increases the use of electricity and cannot remove debris smaller than the main filter itself has the capacity to remove.

The cost of electricity is tied directly to not only the efficiency of the pump, but the power of it. A one horsepower (HP) pump will use approximately .75 kilowatts (kW) of electricity per hour. While many school facilities may be using 1 or 2 HP filter pumps, some are also using much older and more powerful ones, up to as many as 20 HP.

According to the United States Department of Labor, Bureau of Labor Statistics, the average cost of a kW in the United States is about 12.5¢ per hour. However, in the major metropolitan areas it can be far higher as shown below relating to Los Angeles. In the San Francisco area it is even higher at 22¢ per hour, while New York is close to 20¢. Therefore a 1 HP pump will cost approximately $2.25 per day if it operates as many of the laws require, continuously, although by reducing its use during the night hours, that can be reduced up to 75% as running it at half speed reduces the amount of electricity used by a single speed pump. By reducing the speed of the pump in half, the energy consumption decreases four times. Not enough!!!

Item	November 2010			November 2011		
	United States	Los Angeles	Percent difference	United States	Los Angeles	Percent difference
Electricity per kWh	$0.127	$0.205	61.4	$0.130	$0.199	53.1
NOTE: A positive percent difference measures how much the price in the Los Angeles area is above the national price.						

Robotic cleaners operate for no more than about 3¢ per hour, and some can effectively clean a small school pool in that time. For example, Water Tech which invented the battery-powered, handheld/extended reach pool and spa vacuums in 2002 and has recently added the *Hercules Power-Rated* line of commercial robotic pool cleaners to it line-up, offering five Hercules models. The electricity requirement is compared with that of a traditional pool pump on the chart below. The company's battery-powered vacs consume no electricity, other than to charge the batteries, which is nominal.

A kWh (kilowatt hour) means the amount of kilowatt needed or used in one hour. Pool cleaners and vacuums are not rated in horsepower, but watts. Pool and spa filter pumps are rated in horsepower (HP). 1 HP is the equivalent to .7456 kWs. A pool or spa filter with the following HP rating requires KWh usage used on the chart below, noting that some commercial filter pumps in use are as powerful as 20 hp.

Based on the Bureau of Labor Standards average electricity costs, the following table is a comparison of the costs of one hour's electricity for various power pool pumps and filters, Water Tech's Hercules Power-Rated commercial robotic pool cleaners and its Pool Blaster Pro Series battery-powered, handheld/extended reach pool and spa vacuums (But, keep in mind in the major metropolitan areas, such as Los Angeles or New York, the savings is almost doubled).

Electricity Usage and Cost Comparison

Electricity Use

Single Phase Pool Pumps		Hercules Commercial Robotic Pool Cleaners		Battery-Powered, Handheld/Extended Reach Vacuums
1 HP:	**.75 kWh**	Model 5000:	**0.11 kWh maximum load**	
2 HP:	**1.50 kWh**	Model 6000:	**0.12 kWh maximum load**	
3 HP:	**2.25 kWh**	Model 7000:	**0.13 kWh maximum load**	**0 kWh to operate**
4 HP:	**3.00 kWh**	Model 8000:	**0.26 kWh maximum load**	
5 HP:	**3.75 kWh**	Model 9000:	**0.26 kWh maximum load**	
20 HP:	**15.00 kW-h**			

Electricity Cost

Pump	1 hr. Cost	1 day* cost	Robotic Cleaners	1 hr. cost	1 day cost 3 hr. avg.*	Vacuums	Any use cost
1 HP	**9.4¢**	**$2.25**	**Hercules Model 5000**	**1.3¢**	**3.9¢**	**Pro 900**	**0**
2 HP	**18.76¢**	**$4.50**	**Hercules Model 6000**	**1.5¢**	**4.6¢**	**Pro 1500**	**0**
3 HP	**28.2¢**	**$6.9**	**Hercules Model 7000**	**1.6¢**	**4.8¢**		
4 HP	**37.5¢**	**$9**	**Hercules Model 8000**	**3.3¢**	**9.9¢**		
5 HP	**46.9¢**	**$11.26**	**Hercules Model 9000**	**3..2¢**	**9.9¢**		
20 HP	**$1.88**	**$45.12**					

The average time for a robotic cleaner to clean a pool it is sized for. Note: The foregoing is for a single phase pump running at full power.

According to a study following the distribution of questionnaires sent to the top executives and accounting professionals employed by the major hotels, the authors of their resulting book on *Hotel Management and Operation* concluded that the cost of energy, namely electricity … lights, heating, etc. were the greatest single expense for the hotelier. No single appliance uses more electricity than a pool filter except for perhaps a pool heater. The pumps are required in many states to run without interruption up to 24 hours a day.

Many states have recently enacted laws that require public or publically-accessible pool facilities to use the latest energy-efficient, dual-speed pool filter pumps that require as little as 10% of the electricity used of their earlier counterparts. These pumps are or can be programmed to run at reduced power and speed during the evening hours when bather load is low and often when the pool is closed entirely.

The Regulations Should Also Be Proposed Guidelines For Private, Residential Pools, Spas and Hot Tubs

As discussed above the American Public Health Association's Joint Committee met in 1959 and decided to issue three reports on public pools, private residential pools and other bathing places. It took five years before the first one was issued on public pools and another six before a skimpy one was issued on private residential pools, the third one being irrelevant here. In the 1970 report as mentioned above, "The scope of Suggested Ordinance and Regulations Covering Private Residential Pools is more limited than the model legislation dealing with public pools," justifying the reason as "The Joint

Committee felt that most governmental agencies do not have the necessary legal power to enforce operation and maintenance standards for private residential swimming pools, and of those that have the necessary legal power to do so, only a few would have the resources to conduct programs of compliance.

Yes and no. Yes, few have the resources to conduct programs of compliance, which is also the case for any comprehensive program of compliance even with public pools, given that there are nearly half a million in operation in the United States. However, the opinion that most agencies do not have the necessary legal power may have been a cop out, at best or simply ignorance. As referenced above the 10th Amendment to the United States Constitution has been interpreted by the courts to give the states exclusive power to police the health, safety and morals of their populous. Subsequent to 1970 many and probably most if not all states passed regulations relating to health and safety of private residential pools. Today most require that a pool be fenced off and usually with a locking gate. They regulate the type of diving boards that can or cannot be installed and used. Some states require alarm systems.

Since the MAHC is not intended as were some of the APHA proposed regulations and ordinances but simply uniform guidelines, legal power is irrelevant anyway. It is intended unlike the Virginia Graham Baker federal act with was codified into federal law to be uniform guidelines.

More than 20% of all pools and spas in the United States are public pools. The gross majority of injuries and deaths that occur in pools occur in private residential pools. This has been the case with entrapment deaths and injuries, so the VGA really will have far less impact on such tragic events because it is targeted only for public pools and arguably pool builders of even private pools. (In the last few years the number of pools being built has fallen due to the Recession and its aftermath by as much as a reported 90%. Therefore, the Center and this writer contend that there is no justification other than time, space and finances for the entire MAHC, but the section on Circulation and Filtration in particular not to include proposed guidelines for *all* pools and spas.

Proposed Regulations For The Use Of Swimming Pool & Spa Cleaners and Vacuums

The following regulations shall apply to all public *and private* swimming pools, spas and hot tubs:

"*Cleaning Swimming Pools*

A vacuum-cleaning system shall be provided. When an integral part of the recirculation system, sufficient connections shall be located in the walls of the swimming pool, at least eight inches below the water line. *

The operator of every pool and spa shall have available and use on a regular basis an electric robotic vacuum cleaner with an onboard filter bag compliant with the standards and certified by the NSF with an effective pore size to filter 50% of all Crytosporidium occysts with every passing.

The operator of every pool and spa shall have available and use on a regular a handheld, power-drive vacuum cleaner compliant with the standards and certified by the NSF. capable of attaching a standard pool pole with an onboard micro filter bag with an effective pore size to filter 50% of all Crytosporidium occysts with every passing.

Visible dirt on the bottom of the swimming pool shall be removed every 24 hours or more frequently as required. Visible scum or floating matter on the swimming pool surface shall be removed within 24 hours by flushing or other effective means." *

*** Taken verbatim from the 1964 report published by the American Public Health Association.**

Bibliography of Sources Referenced

THE AMERICAN PUBLIC HEALTH ASSOCIATION (1912-1981)

American Journal of Public Health, Sanitary Engineering Section American Public Health Association, Volume 11, April 1912, Issue 4

Read at the Annual meeting of the Association, held in Havana, December 1911

Sanitary control of a public swimming pool

George W. Simons, Jr., Chief Sanitary Engineer, Florida State Board of Health, Jacksonville, FLA., Read before Sanitary Engineering Section, American Public Health Association, at San Francisco, Cal., September 17, 1920

Report of the committee on bathing places

Read before the Sanitary Engineering Section of the American Public Health Association at the Fiftieth Annual Meeting, New York City, November 17, 1921, and adopted by vote of the Section

The report of the committee on bathing places

Read before the Sanitary Engineering Section of the American Public Health Association at the Fifty- second Annual Meeting at Boston, Massachusetts, October 8, 1923.

Swimming pools and other public bathing places standards for design, construction, equipment, and operation

Report of the Joint Committee on Bathing Places of the A.P.H.A. and the Conference of State Sanitary Engineers 1926

Swimming Pools and Other Public Bathing Places

Report of the A. P. H. A. and the Conference of State Sanitary Engineers, presented to le Public Health Engineering Section of the American Public Health Association at the Fifty-sixth Annual Meeting at Cincinnati, Oct. 18, 1927

Standards for Public Bathing Beaches and Wading Pools

Report of the Joint Committee on Bathing Places of the A. P. H. A. and the Conference of State Sanitary Engineers, presented to, the Public Health Engineering Section of the American Public Health Association at the Fifty-eighth Annual Meeting at Minneapolis, Minn., October 1, 1929

American Journal of Public Health, C. A, Scott, P.B.E. Published by Author, 1931

Recommended Practice for Design, Equipment and Operation of Swimming Pools and Other Public Bathing Places

Prepared by the Joint Committee on Bathing Places of the Conference of State Sanitary Engineers and the Engineering and Sanitation Section of the American Public Health Association 1957

Swimming Pools and Natural Bathing Places, An Annotated Bibliography 1957-1966

Suggested Ordinance and Regulations Covering Public Swimming Pools

Prepared by the Joint Committee on Swimming Pools in cooperation with the United States Public Health Service 1964

Suggested Ordinance and Regulations Covering Private Residential Swimming Pools 1970

American Public Health Association

PUBLIC SWIMMING POOLS: Recommended Regulations for Design and Construction, Operation and Maintenance 1981

American Public Health Association

Looking Forward in the Bathing Place Sanitation Field

Progress Report of the Joint Committee on Bathing Places of the Conference of State Sanitary Engineers and the Engineering Section, A.P.H.A.

Bathing Places

Report of the Joint Committee of the Public Health Engineering Section and the Conference of State Sanitary Engineers, AMERICAN JOURNAL OF PUBLIC HEALTH

SANITARY ENGINEERING SECTION AMERICAN PUBLIC HEALTH ASSOCIATION)

American Journal of Public Health, http://www.apha.org/publications/journal/

US Department of Health, Education and Welfare

http://www.archives.gov/research/guide-fed-records/groups/235.html

Center for Disease Control Model Aquatic Health Code

Notice to Readers: Recreational Water Illness Prevention Week — May 23-30, 2005

United States Swimming Market, 2005.

Pool and spa marketing reference directory.

Markham, Canada: Hubbard Marketing & Publishing Limited; March 2005:19-21.
Us Bureau of the Census. Statistical abstract of the United States: 1995. 115th ed. Washington, DC: US Bureau of the Census; 1995.
Surveillance for waterbome-disease outbreaks associated with recreational water—United States, Yoder J, Blackburn B, Levy DA, Craun GF, Calderon RL, Beach MJ. 2001-2002. In:
Surveillance Summaries, October 22, 2004. MMWR 2004:53(No. SS-8):l-22.
Progress of the U.S. Model Aquatic Health Code Project
World Conference on Drowning Prevention May 13, 2011 Da Nang, Vietnam
Model Aquatic Health Code Cracking the Code.
Aquatics International Cracking the Code – October 2010/http://www.aquaticsintl .com/2010/oct/1010_crackingcode.html
A New Method For Removing and Inactivating Water-borne Pathogens Utilizing Silane Treated Materials
Coating Systems Laboratories, Inc.,
William R. Peterson, PH.D. and Renee E. Berman
2005 International Symposium on Household Water Management
Model Health Code Making Waves in the Aquatics Industry
http://athleticbusiness.com/articles/article.aspx?articleid=3703&zDneid=20
Training Required Are you a certified operator? Does your facility have one on staff? If not, you may be running afoul of the first set of MAHC guidelines
http://www.aquaticsintl.com/2011/mar/11
Healthy Swimming and Recreational Waters
http://www.neha.or?research/healthy_swimming_recreational_waters..
New Code Aims at Standards for Nation's Pools
http://www.recmanagement.com/features.php?fid=201201 feO 1 &ch= 1

Cryptosporidium

Quantitative Flow Cytometric Evaluation of Maximal Cryptosporidium parvum Oocyst Infectivity in a Neonate Mouse Model
Delaunay A, Gargala G, Li X, Favennec L, Ballet JJ
Applied and Environmental Microbiology
-Volume 66, Issue 10, pages 4315, http://www.ncbi.nlm.nih.gov/pubmed/11010875
Cryptosporidium excystation and invasion: getting to the guts of the matter
Huw V. Smith, Rosely A. B. Nicols, Anthony M. Grimason
Trends in Parasitology
volume 21, Issue3, March 2002 Pages 133-142
http://www.cell.com/trends/parasitology/abstract/S1471-4922(05)00024-3

Virulence of three distinct Cryptosporidium parvum isolates for healthy adults

Okhuysen PC, Chappell CL, Crabb JH, Sterling CR, Dupont HL

Journal of Infectious Diseases

Volume 180, Issue 4, pages 1275-1281

http://www.ncbi.nlm.nih.gov/pubmed/10479158

Cryptosporidium parvum Infection in Suckling Rats: Impairment of Mucosal Permeability and Na+-Glucose Cotransport Capet

C. Kapel N, Huneau JF, Magne D, Laikuen R, Tricottet V, Benhamou Y, Tome D, Gobert JG

Experimental Parasitology

Volume 91, Issue 2, February 1999, Pages 119-125

http://www.sciencedirect.com/science/article/pii/004313549390184J

Water Quality Criteria, 1972

A report of the Committee on Water Quality Criteria, Environmental Studies Board, National Academy of Sciences

National Academy of Engineering, Washington, D.C., 1972-EPA-United Sates Environmental Protection Agency

http://nepis.epa.gov

United States Environmental Protection Agency Guide

2 Swimming poolsArchitects and Building Branch at the Department for Education (DFE)

http://www.pwtag.org/researchdocs/Used%20Ref%20docs/39%20swimming%20pools%20Guide%202%20ver5.pdf

SPATA-Swimming Pool and Allied Trades Association Water Treatment Information Bulletins

International Aquatic Foundation 2005 and the Recreational Water Quality (RWQ) Committee

http://www.apsp.org/DocumentFiles/321.pdf

http://www.cdc.gov/healthyswimming/

http://www.cdc.gov/ncidod/dbmd/diseaseinfo/escherichiacoli _g.htm.

http://www.cdc.gov/mmwr/preview/mmwrhtml/00032265.htm

http://www.nsf.org

http://vv?w?.who.int/water sanitation health/bathing/bathing2/en/

ttp://www.cdc.gov/mmwr/preview/mmwrhtml/mm5018a 1 .htm

http://www.epa.gov/waterscience/humanhealth/microbial/legionellaha.pdf

http://www.epa.gov/waterscience/humanhealth/microbial/legionella.pdf

http://wvyw.cdc.gov/mmwr/preview/mmwrhtml/ss5108al .htm

Cryptosporidiosis. A report on the surveillance and epidemiology of Cryptosporidium and epidemiology of Cryptosporidium infection in England and Wales

Gordon Nichols, Rachel Chalmers, lain Lake, Will Sopwith, Martyn Regan, Paul Hunter, Pippa Grenfell, Flo Harrison, Chris Lane

http://dwi.defra.gov.uk/research/completed-research/reports/DWI70_2_201.pdf

Cryptosporidium Occurrence in Wastewaters and Control Using UV Disinfection
Jennifer L. Clancy, Karl G. Linden, Randi M. McCuin
http://iuva.org/sites/default/files/member/news/iuva_news/vol06/issue3/iuva_newsv6n3.pdf
International Ultra-Violet Association- Volume 6, Issue 3
Are Swimming Pool Filters Really Removing Cryptosporidium?
James E. Amburgey, Jonathan M. Goodman, Olufemi Aborisade, Ping Lu, Caleb L. Peeler, Will H. Shull, Roy R. Fielding, Michael J. Arrowood, Jennifer L. Murphy and Vincent R. Hill
http://www.pwtag.org/researchdocs/are%20swimming%20pool%20filters%20really%20removing%20cryptosporidium.pdf. University of North Carolina at Charlotte
Center for Disease Control and Prevention, Efficiency of Sand Filtration for Removing Cryptosporidium Oocysts from Water
P.A. Chapman and Barbara A. Rush
http://jmm.sgmjournals.org/content/32/4/243.full.pdf+html
The Pathological Society of Great Britain and Ireland
Journal of Medical Microbiology-Vol. 32, issue 4, 1990, pg. 243-245
EUSA-European Union of SwimmingPool and Spa Associations
EUSA. Domestic Swimming Water Treatment-2010-Technical Paper-Water Treatment
http://www.eusaswim.eu/Documentation/downloads/Paper-on-water-treatment.pdf
E.U.S.A.-European Union of Swmming Pool and Spa Associations
Local Public Health Governance Performance Assessment/Model Standards
U.S. Department of Health and Human Services/Centers for Disease Control and Prevention
http://www.cdc.gov/nphpsp/documents/final-governance-ms.pdf
NPHPSP-National Public Health Performance Standards Program
In Search of Crypto's Achilles Heel
University of Georgia Research Magazine
http://researchmagazine.uga.edu/winter2007/printinsearch.htm
University of Georgia Research Magazine
Guidelines for Safe Recreational Water Environments
Volume 2 Swimming Polls and Similar Environments
http://www.who.int/water_sanitation_health/bathing/srwe2full.pdf
World Health Organization
A System for Fluoridating Individual Water Supplies
Franz J. Maier
http://ajph.aphapublications.org/toc/ajph/48/6
American Journal of Public Health
Volume 48, Issue 6, June 1958
The unusual mitochondrial compartment of Cryptosporidium parvum
Fiona L. Henriquez, Thomas A. Richards, Fiona Roberts, Rima McLeod and Craig W. Roberts

http://www.cell.com/trends/parasitology/abstract/S1471-4922(04)00296-X
Trends in Parasitology
Volume 21, Issue 2, February 2005
Removal of Cryptosporidium and polystyrene microspheres from swimming pool water with sand, cartridge, and pre-coat filters
James E. Amburgey, Kimberly J. Walsh, Roy R. Fielding and Michael J. Arrowood
http://www.iwaponline.com/jwh/010/jwh0100031.htm
Journal of Water and Health
Volume 10, Issue 1, pg 31-42
The response of Cryptosporidium parvum to UV light
Paul A. Rochelle, Steve J. Upton, Beth A Montelone and Keith Woods
http://www.ncbi.nlm.nih.gov/pubmed/15664531
Trends in Parasitology
Volume 21, Issue 2, February 2005-pg 80-87
Disposable swim diaper retention of Cryptosporidium-sized particles on human subjects in a recreational water setting
James E. Amburgey and J. Brian Anderson
http://www.iwaponline.com/jwh/009/jwh0090653.htm
Journal of Water and Health
Volume 9, Issue 4, September 2011-pg 653-658
Removal of Cryptosporidium-Sized Polystyrene Microspheres from Swimming Pool Water with a Sand Filter with and without Added Perlite Filter Media
James E. Amburgey
http://ascelibrary.org/doi/abs/10.1061/%28ASCE%29EE.1943-7870.0000445
Journal of Environmental Engineering
Volume 137, Issue 12, December 1, 2011-pg 1205-1208
Cryptosporidium spp., a frequent cause of diarrhea in Central Africa Bogaerts
J. Lepage P, Rouvroy D, Vandepitte J
http://www.ncbi.nlm.nih.gov/pubmed/6210302
Journal of Clinical Microbiology
Volume 20, Issue 5, November 1984-pg 874-876
An intestinal xenograft model for Cryptosporidium parvum infection
Thulin JD, Kuhlenschmidt MS, Rolsma MD, Current WL, Gelberg HB
http://www.ncbi.nlm.nih.gov/pubmed/8262647
Department of Veterinary Pathobiology, Collge of Veterinary Medicine, University of Illinois Urbana 61801
Infection and Immunity
Volume 62, Issue 1, January 1994-pg 329-331

Neutralisation of cryptosporidium parvum sporozoites by immunoglobulin and non-immunoglobulin components in serum-Hill
BD. Dawson AM, Blewett DA.
http://www.ncbi.nlm.nih.gov/pubmed/8337483
Research in Veterinary Science
Volume 54, Issue 3, May 1993-pg 356-360
Moredun Research Institute, Edinburgh
Characterization of cyclophosphamide-rat model of cryptosporidiosis
Rehg JE, Hancock ML, Woodmansee DB
http://www.ncbi.nlm.nih.gov/pubmed/3666958
Infection and Immunity
Volume 55, Issue 11, November 1987-pg 2669-2674
Comparative Medicine Division, St. Jude Children's Research Hospital, Memphis Tennessee 38101
Nonspecific immunomodulation influences the course and location of Cryptosporidium parvum infection in neonatal BALB/c mice
Koudela B, Hermanek J
http://www.ncbi.nlm.nih.gov/pubmed/8494297
Journal of Human Parasites
Volume 68, Issue 1, 1993-pag 3-10
Institute of Parasitology, Academy of Sciences of Szech Republic
Ceske Budejovice
Malabsorption of Vitamin A in preruminating calves infected with Cryptosporidium
Holland RE. Boyle SM, Herdt TH, Grimes SD, Walker RD.
http://www.ncbi.nlm.nih.gov/pubmed/1456546
American Journal of Veterinary Research
Volume 53, Issue 10, October 1992-pg 1941-1952
Department of Large Animal Clinical Sciences, College of Veterinary Medicine, Michigan State University, East Lansing 48824
Intestinal Crytoporidiosis: pathosphysiologic alterations and specific cellular and humoral immune responses in rnu/+ and rnu/rnu (athymic) rat
Gardner AL, Roche JK, Weikel CS, Guerrant, RL
http://www.ncbi.nlm.nih.gov/pubmed/1996741
American Journal of Tropical Medicine and Hygiene-January 1991
Volume 44, Issue 1-pg 49-62
Department of Medicine, University of Virginia Health Sciences Center Charlottesville
Cryptosporidiosis of the Stomach Garone MA
Winston BJ, Lewis JH

http://www.ncbi.nlm.nih.gov/pubmed/3706266
The American Journal of Gastroenterology
June 1986, Volume 81, Issue 6-pg 465-470
Effect of Cryptosporidium bailei on broilers infected at 26 days of age
Goodwin MA, Brown J
http://www.ncbi.nlm.nih.gov/pubmed/2369384
Avian Diseases, April-June 1990, Volume 34, Issue 2-pg 458-462
Georgia Poultry Laboratory, Oakwood 30566
Effects of Cryptosporidium parvum infection in Peruvian Children: growth faltering and subsequent catch-up growth
Checkley W, Epstein LD, Gilman RH, Black RE, Cabrera L, Sterling CR
http://www.ncbi.nlm.nih.gov/pubmed/9737562
American Journal of Epidemiology-September 1998
Volume 148, Issue 5-pg 497-506
Department of International Health, Johns Hopkins School of Hygiene and Public Health, Baltimore, MD 21205
Cryptosporidium parvum—propagation of oocyst in neonatal calves
Anathasubramanian M, Ananthan S.)
http://www.ncbi.nlm.nih.gov/pubmed/9444857
Indian Journal of Pathology and Microbiology, October 1997, Volume 40, Issue 4-pg 469-472
Department of Microbiology Dr. ALM Post Graduate Institute of Basic Medical Sciences
University of Madras, Taramani.
Clinical features of Japanese children infected with Cryptosporidium parvum during a massive outbreak caused by contaminated water supply
Yamazaki T, Sasaki N, Takahashi S, Satomi A, Hashikita G, Oki F, Itabashi A, Hirayama K, Hori E.
http://www.ncbi.nlm.nih.gov/pubmed/9394555
The Journal of the Japanese Association for Infectious Diseases
Department of Pediatrics, Saitama Medical School
Experimental Cryptosporidiosis in Kids
Koudela B, Jiri V
http://www.ncbi.nlm.nih.gov/pubmed/9299696
Veterinary Parasitology, August 1997, Volume 71, Issue 4-pg 273-281
Institute of Parasitology, Academy of Sciences of the Czech Republic
Budejovice, Czech Republic.
An in vitro model of infection of human biliary epithelial cells by Cryptosporidium parvum
Verdon R, Keusch GT, Tzipori S, Grubman SA, Jefferson DM, Ward HD
http://www.ncbi.nlm.nih.gov/pubmed/9129102
Journal of Infectious Diseases, May 1997, Volume 175, Issue 5-pg 1268-1272

Department of Medicine, New England Medical Center, Boston, Massachusetts 02111, USA.
Asymptomatic and symptomatic cryptosporidiosis: their acute effect on weight gain in Peruvian children
Checkley W, Gilman RH, Epstein LD, Suarez M, Diaz JF, Cabrera L, Black RE, Sterling CR
http://www.ncbi.nlm.nih.gov/pubmed/9006312
American Journal of Epidemiology, January 1997, Volume 145, Issue 2-pg 156-163
Department of International Health, School of Hygiene and Public Health, Johns Hopkins University, Baltimore, MD 21205, USA.
The emerging recognition of cryptosporidium as a health hazard
Matukaitis JM
http://www.ncbi.nlm.nih.gov/pubmed/9282534
Journal of Community Health Nursing, 1997, Volume 14, Issue 3-pg 135-140
University of Delaware, USA
Role of the enteric nervous system in piglet cryptosporidiosis
Argenzio RA, Armstrong M, Rhoads JM
http://www.ncbi.nlm.nih.gov/pubmed/8968331
Journal of Pharmacology and Experimental Therapeutics, December 1996, Volume 279, Issue 3-pg 1109-1115
Department of Anatomy, Physiological Sciences and Radiology, College of Veterinary Medicine, North Carolina State University, Raleigh, USA.
Helicobacter felis as a co-factor alone or together with stress in cryptosporidial activation in mice
Tatar G, Haziroglu R, Hascelik G)
http://www.ncbi.nlm.nih.gov/pubmed/8746615
The Journal of International Medical Research, November 1995, Volume 23, Issue 6-pg 473-479
Division of Gastroenterology, Hacettepe University, Ankara, Turkey.
Patterns of Cryptosporidium antigen and oocyst excretion in calves studied by reverse passive haemagglutination and light microscopy
Farrington M, Lloyd S, Winters S, Smith J, Rubenstein D
http://www.ncbi.nlm.nih.gov/pubmed/8644461
Veterinary Parasitology, November 1995,
Volume 60, Issue 1-2, pg 7-16
Department of Clinical Microbiology, Addenbrook, Cambridge, UK
Cryptosporidium muris: prevalence, persistency, and detrimental effect on milk production in a drylot dairy
Esteban E, Anderson BC
http://www.ncbi.nlm.nih.gov/pubmed/7622718
Journal of Dairy Science, May 1995, Volume 78, Issue 5-pg 1068-1072
University of California at Davis, School of Veterinary Medicine, Tulare 93274, USA.

Intestinal function and injury in acquired immunodeficiency syndrome related cryptosporidiosis
Goodgame RW, Kimball K, Ou CN, White AC Jr, Genta RM, Lifschitz CH, Chappell CL
http://www.ncbi.nlm.nih.gov/pubmed/7698574
World Journal of Gastroenterology, April 1995, Volume 108, Issue 4-pg 1075-1082
Department of Medicine, Baylor College of Medicine, Houston, Texas
Cryptosporidiosis: laboratory investigations and chemotherapy
Tzipori S
http://www.ncbi.nlm.nih.gov/pubmed/9554074
Advances in Parasitology, 1998
Division of Infectious Diseases, Tufts University School of Veterinary Medicine, North Grafton, MA 01536, USA.
Epidemiology and clinical features of Cryptosporidium infection in immunocompromised patients
Hunter PR, Nichols G
http://www.ncbi.nlm.nih.gov/pubmed/11781272
Clinical Microbiological Review, January 2002, Volume 15, Issue 1-pg 145-154
School of Medicine, Health Policy and Practice, University of East Anglia, Norwich, United Kingdom, paul.hunter@uea.ac.uk
Glutamine transporter in crypts compensates for loss of villus absorption in bovine cryptosporidiosis
Blikslager A, Hunt E, Geurrant R, Rhoads M, Argenzio R
http://www.ncbi.nlm.nih.gov/pubmed/11518676
American Journal of Physiology Gastrointestinal and Liver Physiology
Department of Clinical Sciences, College of Veterinary Medicine, North Carolina State University, Raleigh 27606, USA.
Comparison of in vitro cell culture and a mouse assay for measuring infectivity of Cryptosporidium parvum
Rochelle PA, Marshall MM, Mead JR, Johnson AM, Korich DG, Rosen JS, De Leon R
http://www.ncbi.nlm.nih.gov/pmc/articles/PMC124000/
Applied and Environmental Microbiology, August 2002, Volume 68, Issue 8-pg 3809-3817
Water Quality Laboratory, Metropolitan Water District of Southern California, La Verne, California 91750, USA. prochelle@mwclh2o.com
Cryptosporidiosis: biology, pathogenesis and disease
Tzipori S, Ward H
http://www.ncbi.nlm.nih.gov/pubmed/12191655
Microbes and Infection Magazine, August 2002, Volume 4, Issue 10-pg 1047-1058
Division of Infectious Diseases, Tufts University School of Veterinary Medicine, North Grafton, MA 01536, USA. Saul.tzipori@tufts.edu
Absence of weight loss during Cryptosporidium infection in susceptible mice deficient in Fas-mediated apoptosis

Motta I, Gissot M, Kanellopoulos JM, Ojcius DM
http://www.ncbi.nlm.nih.gov/pubmed/12270729
Microbes and Infection Magazine, July 2002, Volume 4, Issue 8-pg 821-827
Unite de Biologie Molecuculaire du Gene, Inserm 277, Universite Paris 7, Institut Pasteur, 25, rue du Dr. Rou 75724 Paris cedex 15, France

Intestinal cryptosporidiosis at an early age and its negative consequences
Beier TV, Sidorenko NV, Anatskaia OV
http://www.ncbi.nlm.nih.gov/pubmed/16562739
ed Parazitol (Mosk), January-March 2006, Volume 1
pidemiological and clinical features of travel associated cryptosporidiosis-Weitzel T, Wichmann O, Muhlberger N, Reuter B, Hoof HD, Jelinek T
http://www.ncbi.nlm.nih.gov/pubmed/16882300
European Journal of Clinical Microbiology & Infectious Diseases
Institute of Tropical Medicine, Charite, University Medicine Berlin, Berlin Germany, Thomas.weitzel@charite.de

Cryptosporidiosis: prevalence, genotype analysis, and symptoms associated with infections in children in Kenya
Gatei W, Wamae CN, Mbae C, Waruru A, Mulinge E, Waithera T, Gatika SM, Kamwati SK, Revathi G, Hart CA
http://www.ncbi.nlm.nih.gov/pubmed/16837712
The American Journal of Tropical Medicine and Hygiene, July 2002, Volume 75, Issue 1-pg 78-82
Centre for Microbiology Research, Kenya Medical Research Institute, Nairobi, Kenya. wgatei@kemri.org

Symptomatic and asymptomatic cryptosporidiosis in young children in Iran
Moghaddam AA
http://www.ncbi.nlm.nih.gov/pubmed/19070060
Pakistan Journal of Biological Sciences, April 2007, Volume 10, Issue 7-pg 1108-12
Department of Microbiology, Faculty of Veterinary Medicine, Razi University, Postal Code 67156-8-5414, RO. Box 1451, Kermanshah, Iran.

Induction of arginase II by intestinal epithelium promotes the uptake of L-arginine from the lumen of Cryptosporidium parvum-infected porcine ileum
Gookin JL, Stauffer SH, Stone MR
http://www.ncbi.nlm.nih.gov/pubmed/18852633
Journal of Pediatric Gastroenterology and Nutrition, Oct. 2008, Volume 47, Issue 4-pg 417-427
Department of Clinical Sciences, College of Veterinary Medicine, North Carolina State University, Raleigh, NC 27606, USA. Jody_Gookin@ncsu.edu

Value of syndromic surveillance in monitoring a focal waterborne outbreak due to an unusual Cryptosporidium genotype in Northamtonshire, United Kingdom, June-July 2008

Smith S, Elliot AJ, Mallaghan C, Modha D, Hippisley-Cox J, Large S, Regan M, Smith GE
http://www.ncbi.nlm.nih.gov/pubmed/20738999
Eurosurveillance, August 2010, Volume 15, Issue 33
Real-time Syndromic Surveillance Team, Health Protection Agency West Midlands, Birmingham, United Kingdom
sue.smith@hpa.org.uk
Cryptosporidium parvum isolate-dependent postinfectious jejunal hypersensitivity and mast cell accumulation in an immunocompetent rat model
Khaldi S, Gargala G, Le Goff L, Parey S, Francois A, Ballet JJ, Dupont JP, Ducrotte P, Favennec L
http://www.ncbi.nlm.nih.gov/pubmed/19687199
Journal of Infectious Diseases and Immunity, November 2009, Volume 77, Issue 11
Parasitology Laboratory, Rouen University Hospital, and Institute for Biomedical Research, University of Rouen, Rouen, France.
Chemical and physical factors affecting the excystation of Cryptosporidium parvum oocysts
Kato S, Jenkins MB, Ghiorse WC, Bowman DD
http://www.ncbi.nlm.nih.gov/pubmed/11426720
Journal of Parasitology, June 2001, Volume 87, Issue 3-pg 575-581
Department of Microbiology and lmmunology, College of Veterinary Medicine, Cornell University, Ithaca, New York 14853, USA.
Comparison of Sedimentation and Dissolved Air Flotation Modeling for Cryptosporidium Removal
Moo-Young Han and Won-Tae Kim
http://210.101.116.28/W_kiss2/04705524_pv.pdf
Environmental Engineering Research, Volume 5, Issue 3-pg 151-156
Korean Society of Environmental Engineers
Cryptosporidium and Particle Removal from Low Turbidity Water by Engineered Ceramic Media Filtration
David James Scott
https://uwspace.uwaterloo.ca/bitstream/10012/3784/1/DJS%20Thesis%20complete.pdf
A thesis presented to the University of Waterloo in fulfillment of the thesis requirement for the degree of Master of Applied Science in Civil Engineering, Waterloo, Ontario, Canada 2008
Method 1623: Cryptosporidium and Giardia in Water by Filtration/IMS/FA
http://www.invitrogen.com/etc/medialib/en/filelibrary/pdf.Par.53916.File.tmp/1623.pdf
United States Environmental Protection Agency-December 2005
Are swimming pool filters really removing cryptosporidium?
James E. Amburgey, Jonathan M. Goodman, Olufemi Aborisade, Ping Lu, Caleb L. Peeler, Will H. Shull, Roy R. Fielding, Michael J. Arrowood, Jennifer L. Murphy and Vincent R. Hill, Dr. Amburgey and his research team reported
Efficiency of sand filtration for removing cryptosporidium oocysts from water.

P.A. Chapman and Barbara A. Rush
Removal of Cryptosporidium and polystyrene microspheres from swimming pool water with sand, cartridge, and pre-coat filters
Dr. Amburgey and his team-Kimberly J. Walsh, Roy R. Fielding and Michael J. Arrowood) reported
"Rapid sand filter would provide safe drinking water to millions in developing countries"
Saturday, March 7,
Removal of Cryptosporidium and polystyrene microspheres from swimming pool water with sand, cartridge, and precoat filters
James E. Amburgey, Kimberly J. Walsh, Roy R. Fielding and Michael J. Arrowood, IWA Publishing 2012
Optimisation of pool water filtration for Cryptosporidium oocyst removal and new research
Swansea University, Wales, B T Croll, C R Hayes, C J Wright, S Williams and D. Rowlands
Biofilm- A Nasty that's in your Pool! Professional Pool Operators of America, 2012

FILTRATION

The Role of the Schmutzdecke in Pathogen Removal in Slow Sand and Riverbank Filtration
Michael Unger
http://www.unh.edu/erg/wttac/Presentations/unger_schmutzdecke.pdf
University of New Hampshire
Equipment for Swimming Pools, Spas, Hot Tubs and Other Recreational Water Facilities
http://www.nsf.org
National Sanitation Foundation International Standard
American National Standard
Water and Waste Water Filtration: Concepts and Applications
Kuan Mu Yao, Mohammad T. Habibian, and Charles R. O'Melia
http://pubs.acs.org/toc/esthag/5/11
Environmental Science & Technology, Volume 5, Issue 11, November 1971
A Report on Backwashing of Sand Filter medium Experiment
Gautam Chalasani, Weimin Sun
http://www.egr.msu.edu/~hashsham/courses/ene806/docs/Filter-Backwashing.pdf
Michigan State University College of Engineering
Student-developed filter in Honduras is cause for a party
Anne Ju, http://www.news.cornell.edu/stories/Jan12/acTamara.html
Cornell University Chronicle Online Coagulation and Flocculation
Piero M. Armenante
http://cpe.njit.edu/dlnotes/che685/cls07-1.pdf

New Jersey Institute of Technology
Filtration
Zerihun Alemayehu
http://aaucivil.files.wordpress.com/2010/10/wt-chapter-6-2.pdf
Addis Ababa Institute of Technology/Department of Engineering
Pool Filters-Sand Pool Filters
http://www.poolcenter.com/sand-pool-filter-information.html
PoolCenter. Com
Slow Sand Filter
http://en.wikipedia.org/wiki/Slow_sand_filter
Slow Sand Filtration(Author-L. Huisman
http://www.who.int/water_sanitation_health/publications/ssf9241540370.pdf
World Health Organization-Geneva 1974
History of Water Filters
http://en.wikipedia.org/wiki/History_of_water_filters
http://historyofwaterfilters.com/
History of Water Quality, Purification and Filtration
http://www.tdsmeter.com/education?id=0002
http://www.nesc.wvu.edu/ndwc/ndwc_DWH_1.html
HM Digital, Inc.

STATE CODES

Alabama (Jefferson County Board of Health, Rules and Regulations Governing Design, Construction and Operation of Public Swimming Pools and Spas):
2.10 Vacuum Cleaner
2010 Title 24, Part 2, Vol. 2 California Building Code. Section 3140B, Cleaning Systems:
Florida Department of Health section 64E-9.007 Recirculation and Treatment System Requirements
Delaware Health and Social Services Division of Public Health, Section 26.407 Vacuuming.
Michigan Public Health Code, Act 368. Rule 63.
(Nevada) NAC 444.174 Vacuum cleaners. (NRS 439.200, 444.070) [Bd. of Health, Public Bathing Places Reg. Art. 28, eff. 5-21-74]—(NAC A 11-1-88)
Rules and Regulations For Licensing Swimming and Wading Pools, Hot Tubs and Spas [R23-22-SWI/H&S]
State of Rhode Island and Providence Plantation Department of Health 8.17.1
Utah Administrative Code, R392-302-28. Cleaning Pools.

MISCELLANEOUS

United States Patent Office (various patent applications and issued patents, 1790-2012),
Center for Disease Control (various public notices and newsletters);
United States Department of Labor, Bureau of Labor Statistics
Pacific Gas and Electric 2009 report on Robotic Pool Cleaners
United States Constitution, 10th Amendment
The Network for Public Health Law newsletter, 2012,
State Pool and Bathing Codes (check the references in the White paper around page 12),
Pool & Spa News, Florida Code May 'Create Hazards,' Erin Ansley, July 19, 2012):
American Ground Water Trust in the American Well Owner, 2002, Number 2;
Biofilm- A Nasty that's in your POOL! Professional Pool Operators of America, 2012;
Contested Waters. As Social History of Swimming Pools in America, Jeff Wiltse, The University of North Carolina Press, 2007
The Myth of Filtration Effectiveness, Richard K. Cacioppo, Aqua magazine, May 4, 212, and Lodging Pools 101, Institute for Advanced Marketing, Ltd, Princeton, NJ, 2011
The History of Pool Cleaners, Institute for Advanced Marketing, Ltd, Princeton, NJ, 2011

ARCHIVIAL MATERIAL

Duke University's Cruising Chemistry educational module, the various citations under Cryptosporidium
Library of Congress, Science Reading Room;
America Public Health Association, Washington, D.C. Public Relations Department;
New York Public Library;
Boston Public Library;
Widener Library, Harvard University, Cambridge, MA.
National Archives and Records Administration

AUTHOR BIO (Partial)

Richard K. Cacioppo, Sr., J.D.:

Founder, CEO and Executive Director
Center for Public & Lodging Pool Study
December 2011 – Present (9 months) Princeton, New Jersey

Director of Sales & Marketing/Administrative Counsel
Water Tech Corp
March 2005 – Present (7 years 6 months) World Headquarters, East Brunswick, NJ
Global Manufacturer and Supplier of Battery-Powered Pool & Spa Vacuums and Residential and Commercial Robotic Swimming Pool Cleaners. Creator of the battery-powered pool and spa vacuum.

Founder, President and CEO
Institute For Advanced Marketing, Ltd.
February 1972 – Present (40 years 7 months) New York Metro Area, Silicon Valley, Cupertino, CA, Amsterdam, Holland
Formerly Dream City Publishing Company (founded 1972)
Business Formation, Development and Marketing Consulting Firm

National Sales & Marketing Administrator; In-House Counsel
Aqua Products, Inc.
Pioneer and for the last 20 years #1 domestic manufacturer of robotic swimming pool cleaners
March 1997 – July 2004 (7 years 5 months) Cedar Grove, NJ

Founding and Senior Partner
Law Offices of Richard K. Cacioppo
June 1973 – June 1994 (21 years 1 month) Woodland Hills, Beverly Hills, Hollywood and Los Angeles, California Criminal, Civil Trial and Appellate and Business Consulting Law Firm

Co-Founder, President
L.I.F.E. Institute of Law and Medicine
1979-1980

Public Liaison Los Angeles County
Office of The Medical Examiner
1979-1980

Education

Harvard University
Bachelor of Liberal Arts, Anthropology and Psychology

2012 – 2014 (expected)
Harvard University Law School, Berkman Center for Internet and Society 2013
Cornell University, School of Hotel Management
Master Certificate in Hospitality Management, Hotel Administration
2012
San Fernando Valley College of Law
LL.B., J.D. 1972
Pasadena City College, 1964-1966
A.A. 1966

Industry Certifications and Certificates*

- Certified Pool & Spa Technician, Aquatic Training Institution
- Certified Instructor, National Swimming Pool Foundation
- Certified Pool & Spa Inspector, (CI) National Swimming Pool Foundation
- Certified Aqua Energy Auditor, National Swimming Pool Foundation
- Certified Pool Operator (CPO), National Swimming Pool Foundation
- Certified Maintenance Specialist (CMS), Association of Pool and Spa Professionals
- Certified Service Technician (CST), Association of Pool and Spa Professionals
- Instructor, Pool and Spa Filtration and Circulation, Association of Pool and Spa Professionals
- Certified Aquatic Facility Operator, (CAFO), National Parks and Recreation Association
- Certified Pool & Spa Operator, Tulane University, University of Alabama Birmingham

National Environmental Health Association (NEHA) Certificates of Completion:

- Certificate in Applied Public Health Teams of the US Public Health Service, 2012
- Certificate in Chlorine Chemistry: What Inspectors Need to Know, 2012
- Certificate in Current Technology and Distributed Beach Monitoring Program, 2012
- Certificate in H1N1, Is This An Emergency Management Response, 2012
- Certificate in Is it the Water? The Nuts and Bolts of Waterborne Illnesses and Investigations, 2012
- Certificate in Lessons Learned by CDC-One Year from H1N1, 2012
- Certificate in Marketing Your Message? Getting H1N1 Information to the Priority Groups, 2012
- Certificate in Nanotechnology-Brave New world Or Environmental Health Calamity, 2012
- Certificate in National Nanotechnology Initiative Environmental, Health, and Safety Research, Strategy, 2012
- Certificate in National Model Aquatic Health Code and Risk Reduction Plan, 2012
- Certificate in Pool and Spa Water Chemistry: What Inspectors Need to Know, 2012
- Certificate in Recreational Water Illness Training and Prevention, 2012
- Certificate in Re-Engineering Environmental Health for Challenging Times, 2012
- Certificate in Requirements for Recreational Water Disinfection Equipment, 2012
- Certificate in Salt Water Generators, 2012
- Certificate in Solutions to Suction Entrapment for Pools and Spas and the New IAF-7 Standards, 2012
- Certificate in State of the Science in Microbial Source Tracking: What Environmental Managers
- Certificate in Treated Recreational Water? Associated Outbreaks of Cryptosporidiosis, 2011
- Certificate in Water Chemistry 101,, 2012
- Certificate in What Really Happens at Aquatic Facilities Between Inspections, 2012

Industry Classes Course Certificates of Completion:

- Recreational Water Illnesses, NSPF, 2012
- Aquatic Facility Audits, NSPF, 2012
- Aquatic Risk Management, NSPF, 2012
- Emergency Response Planning and Community Right To Know Act, NSPF, 2012
- Aquatic Play Features, NSPF, 2012
- Electrical Work Practices and Standards, NSPF, 2012

Relevant Publications Authored by Richard K. Cacioppo, Sr. J.D.

- *The History of Pool Cleaners*
  Center for Public and Lodging Pool Study, Princeton, NJ 2011
  A comprehensive history
- *Swimming Pool Filtration and Circulation*
  Center for Public and Lodging Pool Study, Princeton, NJ 2011
  Projected date of publication Fall 2012
  A comprehensive history and analysis
- *Lodging and Public Pools 101*
  Center for Public and Lodging Pool Study, Princeton, NJ, 2012
  A comprehensive analysis and ultimate user guide focusing on the elements of proper cleaning methodology and equipment
- *School Pools 101*
  Center for Public and Lodging Pool Study, Princeton, NJ, 2012
  A comprehensive analysis and ultimate user guide focusing on the elements of proper cleaning methodology and equipment
- *1962. The Year America Changed Its Shopping Habits. Forever?*
  Institute For Advanced Marketing, Ltd., East Brunswick,
  NJ, Projected publication date Winter 2012
  A comprehensive history of mass marketing retailers
- *Idea2Icon*
  Institute for Advanced Marketing, Ltd., East Brunswick, NJ 2011
  The ultimate legal and marketing guide to business creation, development and marketing.

Industry Membership Organizations

- Member, Hotel Engineering Association
- Member, National Association of Hotel & School Engineers
- Member Asian American Hotel Owners Association
- Member, National Hotel Motel Engineer Association
- Member, American Hotel and School Association
- Member, National Recreation and Parks Association
- Member, Greater Philadelphia Hotel Engineers Association
- Member, Central Florida Hotel and School Association

- Member, Association of Pool and Spa Professionals
- Member, National Parks and Recreation Association
- Member, Association of Pool Professionals
- Member of Manufacturer's Counsel of Association of Pool & Spa Professionals (APSP)
- Member, National Environmental Health Association
- **Miscellaneous Professional Organizations:**
- Founder, President and Chairman of the Board of Governors, National Italian-American Bar Association
- President Italian-American Lawyers of California, Member Board of Directors
- Member, American Bar Association
- Member, National Lawyers Association
- Member, Los Angeles County Bar Association
- Member, San Fernando Valley Bar Association
- Member, San Fernando Valley Criminal Bar Association
- Founder and President L.I.F.E Institute of Law and Medicine, 1979
- Member, Friends of The Institute For Advance Learning, Princeton, N.J., 2012

The Center For Public and Lodging Pool Study (CPSPA) and Institute For Public Pool Study (IPPS) are subsidiaries of the Institute for Advanced Marketing, founded originally in 1972 as Dream City Publishing Company

Please contact the Center at CenterforLodgingPoolStudy@gmail.com or the author at Cacioppo@fas.harvard.edu or Rich@CenterforPoolStudy.org

206 Nassau Avenue (the historic Lincoln Highway), Princeton, New Jersey 08542 (848) 565-5095

NATIONAL SWIMMING POOL FOUNDATION
DUAL MAIN DRAIN SUCTION ENTRAPMENT HAIR ENTRAPMENT/ENTANGLEMENT TEST REPORT

Tests conducted April 4, 1997 and May 23, 1997 by

William N. Rowley, Ph.D., P.E.
&
Glen H. Egstrom, Ph.D.

June 1997

©1997 National Swimming Pool Foundation
All Rights Reserved

SUCTION ENTRAPMENT TESTS WITH A 3/4" PIPE FROM MAIN DRAIN TO ATMOSPHERE

Tests conducted May 23, 1997

The following eleven (11) tests were conducted to determine if a main drain or drains were vented to atmosphere could suction entrapment and/or evisceration be prevented. If the tests were proven successful, what would the flow and pipe size parameters be that would provide reasonable design criteria?[32]

The first test with a 3/4" pipe from main drain to atmosphere conducted by Dr. Rowley was on a single UL listed 7-3/4" diameter Hayward SP-1030 Grate at the grate's maximum listed design flow of 148 gpm. This flow rate created a velocity of 3.7 fps through the grate's 13 square inch flow area and a velocity of 14.2 fps in the two inch (2") suction pipe. Dr. Rowley was able to stop the water flow with his abdomen. The vacuum pressure in the sump beneath the grate was at 3 in-Hg or 1.5 psi and then dropped to zero (0) because air was drawn into the pump when Dr. Rowley stopped the water flow with his abdomen. He was then able remove himself without using his arms or legs to push off. He simply floated off with no effort. The pump lost prime for 43 seconds from the time air was drawn through the atmospheric pipe into the main drain sump and then through the suction line and into the pump. This vacuum pressure is below 2.2 psi, the Debeugny threshold of evisceration.

The second test with a 3/4" pipe from main drain to atmosphere conducted by Dr. Rowley was on a single UL listed 7-3/4" diameter Hayward SP-1030 Grate at the grate's maximum listed design flow of 148 gpm. This flow rate created a velocity of 3.7 fps through the grate's 13 square inch flow area and a velocity of 14.2 fps in the two inch (2") suction pipe. Dr. Rowley was able to stop the water flow with his abdomen. The vacuum pressure in the sump beneath the grate was at 3 in-Hg or 1.5 psi and then dropped to zero (0) because air was drawn into the pump when Dr. Rowley stopped the water flow with his abdomen. He was then able remove himself without using his arms or legs to push off. He simply floated off with no effort. The pump lost prime for 44 seconds from the time air was drawn through the atmospheric pipe into the main drain sump and then through the suction line and into the pump. This vacuum pressure is below 2.2 psi, the Debeugny threshold of evisceration.

The third test with a 3/4" pipe from main drain to atmosphere conducted by Dr. Rowley was on a single UL listed 7-3/4" diameter Hayward SP-1030 Grate at the grate's maximum listed design flow of 148 gpm. This flow rate created a velocity of 3.7 fps through the grate's 13 square inch flow area and a velocity of 14.2 fps in the two inch (2") suction pipe. Dr. Rowley was able to stop the water flow with his abdomen. The vacuum pressure in the sump beneath the grate was at 3 in-Hg or 1.5 psi and then down to zero (0) because air was drawn into the pump when Dr. Rowley stopped the water flow with his abdomen. He was then able remove himself without using his arms or legs to push off. He simply floated off with no effort. The pump lost prime for 56 seconds from the time air was

[32] NSPF Suction Entrapment Test Protocol #8

drawn through the atmospheric pipe into the main drain sump, suction line and pump. This vacuum pressure is below 2.2 psi, the Debeugny threshold of evisceration.

The fourth test with a 3/4" pipe from main drain to atmosphere conducted by Dr. Rowley was on a single coverless Hayward SP-1054 Main Drain at a flow of 148 gpm. This flow rate created a velocity of 1.0 fps through the main drain's 46.8 square inch flow area and a velocity of 14.2 fps in the two inch (2") suction pipe. Dr. Rowley was able to stop the water flow with his abdomen. The vacuum pressure in the sump was at 2.5 in-Hg or 1.2 psi and then dropped to zero (0) because air was drawn into the pump when Dr. Rowley stopped the water flow with his abdomen. He was pulled down hard but was then able remove himself without using his arms or legs to push off. He simply floated off with no effort. The pump lost prime for 55 seconds from the time air was drawn through the atmospheric pipe into the main drain sump, suction line and pump. This low vacuum pressure is below the Debeugny threshold of evisceration.

The fifth test with a 3/4" pipe from main drain to atmosphere conducted by Dr. Rowley was on a single coverless Hayward SP-1054 Main Drain at a flow of 148 gpm. This flow rate created a velocity of 1.0 fps through the main drain's 46.8 square inch flow area and a velocity of 14.2 fps in the two inch (2") suction pipe. Dr. Rowley was able to stop the water flow with his hands. The vacuum pressure in the sump was at 5 in-Hg or 2.5 psi and then dropped to zero (0) because air was drawn into the pump when Dr. Rowley stopped the water flow with his hands. He was then able to easily remove his hands. The pump lost prime for 47 seconds from the time air was drawn through the atmospheric pipe into the main drain sump, suction line and pump. This vacuum pressure could cause evisceration.

The sixth test with a 3/4" pipe from main drain to atmosphere that was conducted by Dr. Rowley was on a single open Hayward SP-1054 Main Drain at a flow of 148 gpm. This flow rate created a velocity of 1.0 fps through the main drain's 46.8 square inch flow area and a velocity of 14.2 fps in the two inch (2") suction pipe. Dr. Rowley was able to stop the water flow with his hands. The vacuum pressure in the sump was at 5 in-Hg or 2.5 psi and then dropped to zero (0) because air was drawn into the pump when Dr. Rowley stopped the water flow with his hands. He was then able to easily remove his hands. The pump lost prime for 45 to 60 seconds when air was drawn through the atmospheric pipe into the main drain sump, suction line and pump. This vacuum pressure could cause evisceration.

The seventh test, with 3/4" pipes from both main drains to atmosphere, was conducted with two (2) identical Hayward SP-1054 Main Drains, neither protected by a cover, one of which Dr. Rowley blocked with his abdomen. The test flow was 148 gpm. The resulting velocity was 1.0 fps through the main drain's 46.8 square inch flow area and a velocity of 14.2 fps in the two inch (2") suction pipe. The vacuum pressure in the closed sump was at 4 in-Hg or 2 psi and then decreased because air was drawn into the pump when Dr. Rowley stopped the water flow with his abdomen. He was then able to remove himself without using his arms or legs to push off. He simply floated off with no effort. Flow decreased to 40 gpm but the pump did not loose prime. This vacuum

pressure was very close to 2.2 psi which is the Debeugny threshold of evisceration.

The eighth test, with 3/4" pipes from both main drains to atmosphere, was conducted with two (2) identical Hayward SP-1054 Main Drains, neither protected by a cover, one of which Dr. Rowley blocked with his hands. The test flow was 148 gpm. The resulting velocity was 1.0 fps through the main drain's 46.8 square inch flow area and a velocity of 14.2 fps in the two inch (2") suction pipe. The vacuum pressure in the closed sump was at 3 in-Hg or 1.5 psi and then decreased because air was drawn into the pump when Dr. Rowley stopped the water flow with his hands. He was then able to easily remove his hands. Flow decreased to 90 gpm but the pump did not loose prime. This vacuum pressure is below 2.2 psi, the Debeugny threshold of evisceration.

The ninth test with 3/4" pipes from both main drains to atmosphere was conducted with two (2) identical Hayward SP-1054 Main Drains, neither protected by a cover, one of which Dr. Rowley blocked with his abdomen. The test flow was 148 gpm. The resulting velocity was 1.0 fps through the main drain's 46.8 square inch flow area and a velocity of 14.2 fps in the two inch (2") suction pipe. The vacuum pressure in the closed sump was at 3 in-Hg or 1.5 psi and then decreased because air was drawn into the pump when Dr. Rowley stopped the water flow with his abdomen. He was then able to remove himself without using his arms or legs to push off. He simply floated off with no effort. Flow decreased to 50 gpm but the pump did not loose prime. This vacuum pressure is below 2.2 psi, the Debeugny threshold of evisceration.

The tenth test, with a 3/4" pipe from main drain to atmosphere, conducted by Dr. Rowley was on a single open Hayward SP-1054 Main Drain at a flow of 60 gpm. This flow rate created a velocity of 0.4 fps through the main drain's 46.8 square inch flow area and a velocity of 5.7 fps in the two inch (2") suction pipe. Dr. Rowley was able to stop the water flow with his abdomen. The vacuum pressure in the sump was at 2 in-Hg or 1 psi and then dropped to zero (0) because air was drawn into the pump when Dr. Rowley stopped the water flow with his abdomen. He was then able to remove himself without using his arms or legs to push off. He simply floated off with no effort. The pump lost prime for over a minute when air was drawn through the atmospheric pipe into the main drain, suction line and pump. This low vacuum pressure is below the Debeugny threshold of evisceration.

The eleventh test, with 3/4" pipes from both main drains to atmosphere, was conducted with two (2) identical Hayward SP-1030 Main Drains; neither protected by a cover, one of which Dr. Rowley blocked with his abdomen. The test flow was 60 gpm. The resulting velocity was 0.4 fps through the main drain's 46.8 square inch flow area and a velocity of 5.7 fps in the two inch (2") suction pipe. The vacuum pressure in the closed sump was at 2 in-Hg or 1 psi and then decreased because air was drawn into the pump when Dr. Rowley stopped the water flow with his abdomen. He was then able to remove himself without using his arms or legs to push off. He simply floated off with no effort. Flow remained the same and the pump did not loose prime. This low vacuum pressure is below the Debeugny threshold of evisceration.

CONCLUSIONS

To our knowledge this is the first time that suction entrapment; i.e. body entrapment, evisceration and hair entrapment/entanglement conditions have been tested simultaneously at the same test facility. What is a safe condition for one of these three hazards may be an unsafe condition for another. Safe operating conditions can be achieved with the proper design and sizing of the grate/Anti Vortex Plate and the proper water velocity through the system. The solutions for each are not the same. Only if all three hazardous conditions are prevented does a safe condition exist. On May 23, 1997 additional tests were run to verify the test results obtained on April 4, 1997 and to conduct additional tests for entrapment where the main drain sump was vented to atmosphere by a separate line. The May 23, 1997 test data replicated and thus validated the April 4, 1997 test results. In **test twelve** the dual eight inch (8") main drains (one open and one with a grate) were operated at the maximum listed design flow. This design flow is predicated on IAPMO SPS 1-83[33] and ASME / ANSI A112.19.8M-1987[34] Hair Entrapment/Entanglement Criteria for one main drain, 148 gpm. With one grate removed and the open hole blocked by Dr. Rowley's abdomen a situation in both tests which could possibly cause both suction entrapment and evisceration was present. It is obvious when all three hazards (suction entrapment, evisceration and hair entrapment/entanglement) are reviewed simultaneously the solution becomes vastly more complex. With this in mind the following conclusions and recommendations have examined solutions that will correct all three hazards.

1. All of the twenty (20) suction entrapment tests conducted on the flat test bench utilized two inch (2") suction piping with a twenty-five foot (25') run to the pump. The maximum acceptable water velocity with two (2) main drains, one open and one covered with a grate or anti vortex plate, is six (6) fps.[35] Debeugny concludes that any vacuum pressure above 2.2 psi may cause evisceration.[36] The Ehret and Rowley[37] [38] test concluded that suction entrapment may occur at high velocities through the main suction piping which was also connected to a skimmer. In no case did the vacuum in the blocked main drain sump exceed 1.6 in-Hg/0.8 psi with the above parameters. This leads to the conclusion that with this dual main drain hydraulic arrangement, and using Debeugny's criteria of 2.2 psi vacuum pressure for evisceration, a safety factor of about 2.75 exists. Even with one drain cover removed a suction entrapment problem did not exist. Dr. Rowley was able to remove himself without using his arms or legs to push off. He simply floated off with no effort.

---

[33] "Material and Property Standard for Swimming Pool, Spa and Hot Tub Suction Fittings," International Association of Plumbing and Mechanical Officials (IAPMO) SPS 1-83.

[34] "Suction Fittings in Swimming Pools, Wading Pools, Hot Tubs and Whirlpool Bath Tub Appliances," American Society for Mechanical Engineering/American National Standards Institute, ASME/ANSI A112.19.8M (1987).

[35] Six (6) fps velocity in a two inch pipe represents a flow of 62.8 gallons per minute.

[36] P. Debeugny et al., "Lesion Recto-Sigmoidienne Par Aspiration Trans-Anale," Chirurgie Pédiatrique 31 (1990): 192.

[37] G. F. Ehret and W. N. Rowley, Swimming Pool Main Outlet Tests, July 23, 1974.

[38] G. F. Ehret and W. N. Rowley, Swimming Pool Main Outlet Tests, August 22, 1974.

It appears that IAPMO SPS 1-83 and ASME / ANSI A112.19.8M-1987 Suction Entrapment Test Protocol should immediately be revisited to examine the maximum water velocity of six (6') fps on the suction side of the pump as an upper limit with regard to evisceration and suction entrapment. Some IAPMO and ASME listed two inch (2") suction fittings can develop suction velocities in excess of 14 fps when operating as listed. This high velocity has a potential to cause suction entrapment and evisceration using Debugny's criteria even with dual main drains. Refer to the results of **Suction Entrapment Test Twelve.**

In the suction entrapment tests with a single grate or cover Dr. Rowley was able to easily remove himself despite the high vacuum. For example, on Suction Entrapment Test 7 with 25.5 in-Hg. or 12.5 psi vacuum pressure he simply floated off with no effort.

In the suction entrapment tests with open uncovered main drains it is much more difficult to remove oneself even at relatively low vacuum pressure. For example, on Suction Entrapment Test 10 with 4.7 in-Hg. vacuum or 2.3 psi on an open 7–7/8" uncovered drain it was very difficult to remove oneself from the uncovered drain. The reason for this difficulty lies in the area of the opening. It is much easier to remove oneself from small open areas than a large open area. In the large area the abdomen is pulled in approximately three inches (3") which is not the case in the small open areas of the grate or the cover. On Suction Entrapment Test 11 with 25.5 in-Hg. or 12.5 psi on an 7–3/4" grate there was no difficulty in removing oneself.

2. An average sized twenty-five foot (25') diameter, 3,672 gallon wading pool, six inches (6") deep at its edge and eighteen inches (18") deep at center, with a 62.8 gallon per minute circulation flow, turns over in under one hour, which is an adequate turnover. A flow of 3,672 gallons per hour (61.2 gallons per minute) can be handled quite easily with a two inch (2") pipe operating at less than six (6) fps velocity.

3. It appears that the 1.5 fps and 2 fps velocities through grates and anti vortex plates required in many Standards and Codes may not be a valid parameter. **Test 1** velocity through the anti vortex plate was 2.21 fps, **Test 5** velocity through the grate was 1.3 fps, **Test 7** velocity through the anti vortex plate was 5.0 fps and **Test 11** velocity through the grate was 3.7 fps. In each of the above suction entrapment tests conducted at the unit's maximum listed design flow Dr. Rowley was able to remove himself without using his arms or legs to push off. He simply floated off with no effort. Many Standards and Codes have maximum velocities of 1.5 or 2 fps through the grates or anti vortex plates. We have been unable to find any supporting research or substantive data to validate or justify these apparently low requirements.

4. In analyzing the hydraulics of evisceration there has been concern about the inertia of the hydraulic system and the separation distance of the two main drains. This appears to be a moot point. In most wading pools and

spas the deep area is relatively small; therefore, the dual main drains will have to be located fairly close together. The maximum separation distance of main drains in the test fixture was sixty-eight inches (68"). To be conservative we are recommending all main drains smaller than twelve inch (12") in any swimming pool, wading pool or spa must be dual main drains with a separation distance of three feet (3') between drains in **any** dimension. This will keep the hydraulic inertia of the system low.[39] A system with thirty feet (30') of seperation between drains has ten (10) times the kenetic energy of a system with only three feet (3') separation.

5. In reviewing the separation distances in the suction entrapment test, and Dreyfuss 1993 anthropometric data, on a 99 percentile man (6'-3.6" tall, 244 pounds), the distance between his hip and his shoulder is 20.5 inches *(Appendix 3)*[40], indicating that a three foot (3') separation distance between **any** dimension on a dual main drain system will be more than sufficient to prevent a single person from blocking two (2) main drains. Three feet (3') between the closest point on the drains has been used in many Codes apparently because it was always used. No substantiated research can be found to back up this dimension.

   Next the inertia of the hydraulic system must be taken into account to prevent evisceration. This is why it is recommended that the velocity in the suction system be limited to six feet (6') per second, the criteria used for years on conservative aquatic hydraulic designs. The closer the main drains are to each other in a wading pool, spa or a small swimming pool the less the hydraulic inertia will be in a two drain system when one of the drains is blocked; i.e., in this case, closer is better to a point with a main drain separation of three feet (3') between **any** dimension. It is not necessary or even desirable on larger swimming pools with main drains that are 12"x12" or larger to place them in such close proximity because the grates are larger and separation gives better flow distribution in the larger bodies of water. In the suction entrapment tests 18, 18A, 19 and 19A we were unable to block a single 12"x12" or 18"x18" main drain.

6. With a 3 HP pump and twenty-five feet (25') of two inch (2") suction piping it was easy to produce flows in excess of 150 gpm-14.3 fps plus velocity through the two inch (2") piping in a two main drain system. With this flow the vacuum in the blocked main drain was 5.9 in-Hg or 2.9 psi and would cause evisceration or suction entrapment on an eight inch (8") diameter dual main drain system on the unprotected drain with one (1) cover installed and one (1) cover missing.

7. To prevent evisceration or suction entrapment it is extremely important in the hydraulic design of the suction side of the circulation system that the six feet (6') per second velocity parameter in suction piping not be exceeded in any wading pool, spa or swimming pool.

---

[39] See Recommendations #2

[40] Alvin R. Tilley, The Measure of Man and Woman (New York: Henry Dreyfus Associates, 1993) 11.

8. A limited series of six (6) tests were conducted to quickly examine the IAPMO SPS 1-83 and ASME/ANSI A112.19.8M-1987 Hair Entanglement Test Protocol. In this aspect it appears that the protocol is valid. Even with a full head of synthetic hair, entrapment/entanglement was impossible as long as the fitting was operated within its IAPMO SPS 1-83 and ASME/ANSI A112.19.8M-1987 listed design limits. Additional testing of hair entrapment/entanglement utilizing full heads of real hair must be conducted to completely validate the IAPMO SPS 1-83 and ASME/ANSI A112.19.8M-1987 test protocol.

9. The eleven (11) suction entrapment tests that were conducted using a 3/4" pipe from the main drain vented to atmosphere concluded in each test that such a vent pipe, when open, would prevent suction entrapment. These tests had flows from 60 to 148 gallons per minute through a two inch (2") suction pipe. More testing needs to be accomplished to determine the viability of using vent pipes in preventing evisceration. Tests 10 and 11 using the lower flow of 60 gpm with both single and dual main drains had vacuums that were well below the threshold level of evisceration. More testing needs to be conducted to determine if the use of a larger 1-1/2" vent pipe in Tests 5, 6 and 7 would decrease the high vacuum level in the main drain sump, which was near or above the threshold of evisceration.

10. Further, hair entrapment tests should also be conducted for positions other than flat placement of covers or grates.

RECOMMENDATIONS

1. The results of Suction Entrapment Tests 12, 12A, 12B, 14 and 15, which operated at or below listed flows, are close to or beyond Debeugny's threshold of evisceration of 2.2 psi. IAPMO SPS 1-83 and ASME / ANSI A112.19.8M-1987 Suction Entrapment Test Protocol for listed flows should be immediately revisited with regard to suction entrapment/evisceration and investigated as to the maximum water velocity of six (6') fps on the suction side of the pump.

2. All main drains smaller than a 12"x12" grate in any swimming pool, wading pool or spa should be dual main drains with a separation distance of three feet (3') between drains in **any** dimension. All main drains larger than a 12"x12" grate on any swimming pool should be dual main drains with a separation distance of three feet (3') or more.

3. To prevent evisceration all main drains in wading pools should be covered at all times with anti vortex plates. This will prevent a child sitting on and partially blocking the second main drain and causing evisceration of a child on the first unprotected/coverless main drain.

4. In any wading pool, spa or swimming pool, the velocity of the suction side of the circulation system should not exceed six (6) fps.

5. In any wading pool or spa the suction side of the circulation system must be teed and split hydraulically equally in as short a distance as reasonable between the two or more main drains. Both branches of the "T" shall have the same size plumbing as the main suction plumbing.

6. In any swimming pool the suction side of the circulation system should be teed and split hydraulically equally between the two or more main drains. Both branches of the "T" shall have the same size plumbing as the main suction plumbing.

7. Vent piping 3/4" or larger from the main drains to atmosphere on dual main drains are identified as additional protection to prevent suction entrapment.

8. The bottom drain and recirculation outlets in wading pools, spas or swimming shall be covered with grates or protective devices which shall be removeable only with tools.

9. In the event a main drain cover is broken or missing the wading pool, spa or swimming pool should immediately be closed until the cover is replaced.

Suction Entrapment Tests With 3/4" Pipe From Main Drain To Atmosphere
5/23/97

Hayward 8" Grate	Flow GPM/fps	Pump Discharge Pressure psi	Pump Suction Pressure in-Hg	Vacuum Open Plate Grate in-Hg/psi	Pump Time to Prime seconds	Remarks
Single Grate Design Flow	148gpm/14.2fps	16	17.5	3 in-Hg/1.5 psi	–	–
1. Single Blocked Grate	148gpm/14.2fps	16	17.5	3 in-Hg/1.5 psi	43	pump lost prime (plp) floated off easily
2. Single Blocked Grate	148gpm/14.2fps	16	17.5	3 in-Hg/1.5 psi	44	(plp) floated off easily
3. Single Blocked Grate	148gpm/14.2fps	16	17.5	3 in-Hg/1.5 psi	56	(plp) floated off easily
4. Single Main Drain Blocked No Cover	148gpm/14.2fps	16	17.5	2.5 in-Hg/1.2 psi	55	(plp) pulled down hard floated off easily
5. Single Main Drain Blocked No Cover	148gpm/14.2fps	16	17.5	5 in-Hg/2.5 psi	47	(plp) blocked w/ hands removed easily
6. Single Main Drain Blocked No Cover	148gpm/14.2fps	16	17.5	5 in-Hg/2.5 psi	45 to 60	(plp) blocked w/ hands removed easily

Chart Nine *(continued on next page)*

Suction Entrapment Tests With 3/4" Pipe From Main Drain To Atmosphere
5/23/97

Hayward 8" Grate	Flow GPM/fps	Pump Discharge Pressure psi	Pump Suction Pressure in-Hg	Vacuum Open Plate Grate in-Hg/psi	Pump Time to Prime seconds	Remarks
7. Dual Main Drain One Open One Blocked	148gpm/14.2fps 40 gpm	21 1.5	13 1	4 in-Hg/2 psi	pump did not loose prime	floated off easily
8. Dual Main Drain One Open One Blocked	148gpm/14.2fps 90 gpm	21 7	13 6	3 in-Hg/1.5 psi	pump did not loose prime	blocked w/ hands removed easily
9. Dual Main Drain One Open One Blocked	148gpm/14.2fps 50 gpm	21 4	13 2	3 in-Hg/1.5 psi	pump did not loose prime	floated off easily
10. Single Main Drain Blocked No Cover	60 gpm/5.7 fps	38	3.25	2 in-Hg/1 psi	1 minute+	(plp) floated off easily
11. Dual Main Drains One Open One Blocked	60 gpm/5.7 fps same flow	38.5 38	2.5 3.3	2 in-Hg/1 psi	pump did not loose prime	floated off easily

Chart Nine

CASE STUDY: The Option of Pools without "Main Drains"

February 2009

Background

The Virginia Graeme Baker Pool and Spa Safety Act ("VGB Act") and the *ANSI/APSP-7 Standard for Suction Entrapment Avoidance in Swimming Pools, Wading Pools, Spas, Hot Tubs, and Catch Basins*[i] are dedicated to the common goal of saving lives by eliminating entrapment deaths and injuries in pools and spas.

The focus of this study is public and commercial pools. Most public pools are regulated by state health departments. These departments formulate and enforce, among other things, the requirements for circulation and sanitation of these pools. Review of all epidemiological reports collected by the U.S. Consumer Product Safety Commission (CPSC) has revealed five distinct entrapment hazards related to drains:

- **Body entrapment**
- **Limb entrapment**
- **Hair entrapment**
- **Evisceration (disembowelment)**
- **Mechanical entrapment**

The CPSC and the industry have acknowledged these 5 forms of entrapment as affirmed in national standards approved by the American National Standards Institute (ANSI), CPSC guidelines, and many building codes. Further research has revealed three underlying causes of entrapment hazards and some serious misconceptions on the part of many regulatory agencies. Sadly, these misconceptions have contributed to entrapment deaths and injuries.

A goal of this study is to dispel those misconceptions and reveal the simplicity, functionality, and efficacy of the most overlooked solution to all of the five known suction entrapment hazards. Hopefully, this will induce health departments across the United States to take immediate action to employ this simple solution and completely eliminate even the possibility of such entrapments in the future.

To accomplish this goal it is first necessary to understand the three underlying causes of the five entrapment hazards.

1. **Flow** (speed or velocity) of moving water through the submerged outlet

   Responsible for hair entrapment

2. **Suction** (atmospheric pressure) or the force pushing water through the submerged outlet

   Responsible for body entrapment and evisceration

3. **Mechanical causes** (shape and/or size of openings and edges of components)

   Responsible for limb entrapment and mechanical entrapment (finger, jewelry, belts, etc.)

The VGB Act and the ANSI/APSP-7 standard both require that, when submerged suction outlets are used, each outlet be protected by a cover that meets the ASME/ANSI A112.19.8 2007 suction fitting standard. When in place, with water flowing at or below the listed flow rate, these covers will prevent all five hazards.

However, as the ANSI/APSP-7 standard correctly states, there is no such thing as a backup for a broken or missing cover. Hence, should a cover become missing or broken, the only safe course is to immediately close the pool or spa to bathers until repairs can be made. It must also be noted, however, that in each of the reported entrapment tragedies in recent years, including the death of Abigail Taylor in Minnesota, the cover was not in place, and the facility was not closed as required by the ANSI/APSP-7 standard or applicable laws. This was the same issue involved in the June 24, 1993, evisceration of Valerie Lakey[ii] and also what killed Kiah Milsom on July 20, 2008. We can't be certain why screws become "missing," but we know that it continues to happen. Human error cannot be legislated away. There is no way to assure that such mistakes will not occur in the future. Every hazard protection method relies, to some extent, on human behavior and common sense. Elimination of the hazard though, when accomplished through design, is foolproof. It is for this reason that the U.S. Consumer Product Safety Commission wrote the following words in the latest "CPSC Staff's Guide to Complying with the Law":

> *CPSC staff recommends that to ELIMINATE and not just MITIGATE the drain entrapment hazard in pools and spas, pool owners should disable old drains or build new pools without any drains and use gutters, overflows and/or skimmers to provide water to the pump.*[iii]

The following historical and scientific review provides irrefutable evidence that submerged suction outlets are not required for proper sanitation or circulation of public pools and common sense dictates that elimination of the hazard is superior to mitigation every time. NO DRAINS = NO HAZARD.

Myth

A main drain is essential in a pool to maintain healthy water.

Science does not support this conclusion. In fact, science concludes just the opposite. In a 2006 issue of Fluent News, the leading manufacturer of computational fluid dynamics software, an article ran that compared pools with and without drains. The conclusion: there were no significant differences between the circulations of the two pools. In fact, the skimmer-only pool was slightly better.[iv] What is even more disturbing is that on page 50 of this same 2006 issue, the software was used to model a revolutionary new swim skin technology that was sure to dominate the upcoming 2008 Olympic Games. Pictured in that review: Michael Phelps, Olympic

swimming gold medalist. The swim-speed technology was embraced, but the swim-safety technology was essentially overlooked by the mainstream media.

Circulating and sanitizing water in recreational bathing facilities (hereinafter referred to as pools), both residential and commercial, is neither complex nor difficult to achieve. There are only three reasons, historically, associated with requiring drain(s). First, cleaning the water. Second, sanitizing it. Both are achieved through the use of circulation and filtration systems. The third reason, historically cited, is the practical need to empty a pool.

One need only look at the wording in current state codes, for example the state code[v] in Kentucky where Kiah Milsom died on an uncovered drain in 2008, to validate that all state codes once reflected the science behind circulation:

> *Section 9. Facility Water Treatment Systems.*
>
> *(7)(c) Inlets shall be located and permanently directed to produce uniform circulation of water to facilitate the maintenance of a uniform disinfectant residual throughout the entire facility without the existence of dead spots. Inlets in facilities with skimmers shall be twelve (12) inches below the midpoint on the skimmer throat. Inlets in facilities with a prefabricated perimeter overflow system shall be eight (8) inches or more below the lip of the gutter.*
>
> *(7)(f) At least one (1) inlet shall be located in each recessed stairwell or other space where water circulation might be impaired.*

Water is cleaned mechanically by filtering out particulate matter, which is collected by vacuuming the pool, either manually or with an automatic cleaner. Water is sanitized through the use of chemicals, which can be distributed throughout the pool manually or through automatic chemical feeders. We could expand this discussion further by going into detail regarding the various methods and devices for distributing sanitizer, but for purposes of this discussion, this ancillary information will only complicate the obvious: submerged suction outlets are not necessary to accomplish either of these tasks.

The issue at hand is: where possible, “design out” the main drain. Its potential to create a hazard far outweighs its insignificant contribution to cleanliness or sanitation. This doesn’t mean drains should be outlawed, but if main drains are used, they must be safeguarded. The purpose of this discussion is to examine whether submerged suction outlets (drains) are required to achieve adequate circulation and sanitation. All of the ANSI/APSP pool and spa construction and design standards, the VGB Act, and the latest *ANSI/APSP-7 Standard for Suction Entrapment Avoidance in Swimming Pools, Wading Pools, Spas, Hot Tubs, and Catch Basins* allow for pools to be built without submerged suction outlets (main drains).

The focus of this report is on the potential risk associated with uncovered suction outlets (main drains). Even properly installed suction outlets with approved safety covers have a potential to become a hazard if a cover becomes missing or broken. Incident reports (see data chart below) collected by the Consumer Product Safety Commission conclude that the main reason for body and limb entrapment is a missing or broken main drain cover. The data also revealed that limb entrapments have occurred in coverless open pipes when there was no water flowing through the system at all; the pumps weren’t even running.[vi]

First, let’s look at the history. Why do we have drains in the first place? To answer that question, one need look no further than the Biltmore Estate in North Carolina. Completed in 1895, it

included a 70,000-gallon swimming pool. The Vanderbilt family would fill the pool, invite guests from all over the world to stay for a weekend, feed them southern fried chicken and collard greens, and encourage everyone to go for a swim. When the guests left for home on Monday, they would pull the plug from the bottom drain and empty the pool.

When technology advanced to the point where circulation systems were developed for recreational water facilities to clean the water, they simply hooked a pipe to the existing bottom drain and used it to feed water to the pump for filtration. That is where drains originated. They were the convenient way to transfer water from the pool to the pump. This building practice was carried over to the soon-to-be-born pool and spa industry after World War II. Research reveals no scientific basis linking the need for a main drain to properly maintained healthy pool water.

Interestingly, this advancement, from "drain and fill" to "circulate and sanitize," leads to another misconception which stubbornly persists to this day: the belief that drains are necessary to empty the pool. The reality is that pool circulation pumps drawing their water through the piping systems from the bottom drains are terribly inefficient at emptying pools. Pools today are typically emptied using high-volume centrifugal pumps designed for the task. The pump is placed on the deck near the deep end of the pool, a flexible suction hose, usually 3" or 4" in diameter is placed into the water at the deepest point, and the pump is started. A typical deck-mounted centrifugal pump will empty a 15,000-gallon pool in about 1½ hours. The typical pool circulation pump could take all day to do the same job. While one might think that because a public pool requires a 6-hour turnover, that means the pool can be completely drained in 6 hours, this is not the case. As the pool water level falls, the circulation pump typically begins to lose prime and the flow rate drops dramatically.

Again, the Kentucky state code example from above confirms this misconception in its section for pool outlets:

> *Section 9. Facility Water Treatment Systems.*
>
> *(8) Outlets.*
>
> *(a) All facilities shall be provided with a main outlet at the deepest point to permit the facility to be completely and easily drained.*

In fact, even the most often-used term – *main drain*, not outlet – is a clear sign of what these devices were used for before we had inexpensive and improved means to drain a pool. With the risk of suction entrapment reaching the point of requiring federal legislation, it is time to let go of tradition, and let science and engineering dictate how swimming pools are built in order to completely eliminate the possibility of entrapment.

Now, let's take a look at the empirical data and experience that challenges the "need" for drains. To begin, tens of thousands of residential in-ground concrete, fiberglass, and vinyl liner pools are constructed without bottom drains. Further, there are more than 4 million above-ground pools in use across the United States today. Typically, these pools have minimal circulation systems, many with one skimmer and one circulation return fitting. Yet, even without drains, these pools are able to circulate and sanitize pool water very effectively. There have been no health or disease epidemics reported in these pools. Consider these numbers and the evidence becomes compelling – main drains aren't necessary.

There is a tendency to attribute a different set of parameters to public pools because they are typically larger and hold more bathers. That may be true, but they also have larger and typically

more sophisticated filtration and sanitation systems. Systems designed for a specific bather load are designed and equipped to maintain sanitary conditions for said load.

The pool shown below is located at a very well known South American resort and it has no submerged suction outlets (main drains). All of the water for the circulation system is delivered from skimmers placed around the perimeter of the pool spaced approximately every 15 feet. This is typical of new, leading edge, public pool construction technology. In fact, the pool in Omaha, Nebraska, where the Olympic Swimming Trials were held for the 2008 Olympics, was constructed without drains; this training pool was 25 meters wide, 50 meters long, and had a minimum depth of 2 meters.

What this shows is that a healthy bathing environment can be achieved and maintained without main drains despite huge bather loads – and is being achieved in public pools with hundreds of thousands of gallons of water.

As to the science behind cleaning and circulating sanitized water, there is one simple scientific fact at the core of this discussion: ***water, like air, cannot support a tensile force; water cannot be "pulled.***" This means that if water is to be moved, it must be "pushed" as it is through the return side of pool circulation systems. Water and air share this common characteristic. To illustrate, try sucking out a birthday candle a foot from your mouth – it is impossible. You can, however, blow it out from a couple of feet away by pushing or forcing a blast of air at the flame. The same scientific principle applies to water.

Accepting this scientific fact leaves only one significant question relating to the suction side of any circulation system: how can the water be most effectively moved or "pushed" from the pool back to the pump? Historically, installing suction outlets (main drains) was one of the methods used to simply deliver or "push," through force of atmospheric pressure, water towards the

pump. The function of the pump was to then deliver or "push" the water through the filter and back into the pool by way of the circulation returns. Utilizing drains is one way to deliver the water; all they do is deliver the water. Utilizing only surface skimmers or overflow gutters are other accepted delivery systems that provide the additional benefit of not only delivering the water, but also cleaning the water by skimming floating debris from the surface.

The force exerted on a bottom drain, even in a gravity flow design, where the bottom drain delivers water to a collector tank with no direct connection to the pump, can be extraordinary. Atmospheric pressure is 14.7 pounds per square inch and increases as the water depth increases. This is the force that pushes the water through the piping to the pump. At a depth of 6 feet, the atmospheric pressure and the hydrostatic pressure (weight of the water) pushing on an 8-inch round drain sump could produce a force exceeding 700 lbs.

Public pools designed and constructed utilizing these same engineering concepts would actually be easier and less expensive to build – and clearly safer than pools utilizing submerged suction outlets (drains). There have been other articles on building pools without drains in *Pool & Spa News*[vii] dating back to 2003 – and others as recently as the November 2008 Issue of *WaterShapes* magazine.[viii]

The single most commonly held, yet mistaken, belief regarding drains is that they "vacuum or suck in dirt" and somehow "clean the floor." They do not. Remember the candle experiment? Pool drains are no different. If a leaf is placed two inches from the opening of a flowing two-inch pipe, it will never enter the pipe unless it is pushed in – either by a brush or by a stream of water specifically directing it to the pipe opening. In fact, a pool left un-vacuumed for several weeks is complete proof that the drain alone cannot clean the settled debris. Some debris does enter the drain, by chance, but the pool will still require routine vacuuming in order to remove settled debris. Since vacuuming, manually or via automatic cleaner, is a routine part of pool maintenance, why rely on a drain that might remove "some" of the settled debris, but also leaves bathers exposed to a proven lethal hazard?

When one vacuums a dirty pool, it clearly leaves a "clean spot" where the submerged vacuum head has moved across the bottom of the dirty pool floor. If one pushes too fast, the settled debris will be agitated and stirred up into the water – and not enter the vacuum. This happens with direct suction on the vacuum cleaner head. Vacuuming the pool requires slow, careful movement of the head so as not to disturb the settled dirt.

At home, one need look no further than the living room for proof of this same phenomenon. When vacuuming carpet next to the couch, does it suck dirt out from under the couch or must the couch be moved to clean under it? In fact, if we were to spread some dirt out on the living room carpet and vacuum it with direct suction, it would indeed leave a clean track, just like vacuuming a pool. Now imagine if we were to switch from a vacuum cleaner to a leaf blower and try to blow that dirt out the front door? You can easily see the picture. In moments, the entire house would be consumed with clouds of dust that would settle out on every bookshelf, windowsill, china cabinet, and counter top.

Not unlike the leaf blower, it is the strategically placed return inlets that are responsible for distributing sanitizer throughout the pool. Additionally, as pools scale in dimension and size, more return inlets are required, as are skimmers. Interestingly, no matter how large a pool is, not a single state residential or public pool code requires that more than one set of drains be installed. If drains are critical to circulation, how could all states have made such a universal mistake? Submerged suction outlets, unless part of a strategically designed in-floor cleaning system, do

little to clean the pool floor. Professional engineers and designers understand this phenomenon and design public pools accordingly.

Licensed professional engineers who design the construction documents and specify the circulation system requirements for commercial and public pools call for the addition of circulation return inlets as pools grow in size and shape to effectively distribute sanitized water throughout the pool. For example, they call for return inlets to be placed in alcoves and step areas outside the pool perimeter. They may call for additional skimmers or conversion from skimmers to a perimeter overflow gutter to better clean the pool surface in large pools.

They never call for additional submerged suction outlets (drains). This is not an oversight or an error. The professional design engineers clearly understand that circulation and distribution of sanitizer is achieved by the "pushing water" phenomenon through the return side of the system – and not through suction outlets (drains). And they specify separate vacuum pump systems for debris removal, knowing that drains do not remove dirt or contaminants. Number, location, size, and direction of return inlets and fittings determine how well water is circulated, agitated, and distributed to all areas of the pool.

In summary, with regard to sanitation and distribution of sanitizer, main drains contribute virtually nothing to the distribution of sanitizer in a pool. They simply deliver "used" water back to the pump after the sanitizer has done its job. The main drain delivers the "used" water back to the pump where it is pushed through the filters and picks up fresh new sanitizer to be delivered back to the pool on its return trip.

Another myth regarding drains is that they are required to produce adequate water flow. Consider the circulation requirements. The *ANSI/APSP-5 2003 Standard for Residential In-ground Swimming Pools* requires that all the water in the pool must be filtered and circulated at least once in 12 hours. In a 15,000-gallon pool, that would equate to a flow rate of 21 gallons per minute (gpm). Most skimmer manufacturers recommend a minimum flow rate of 30 gpm for effective skimming. Many of these skimmers are NSF-rated to 55 gpm and some skimmers are rated up to 80 gpm by the National Sanitation Foundation. By arranging the return fittings in a pattern to direct the water into all areas of the pool, a single skimmer is all that is needed. And all the water in a 15,000-gallon pool could be filtered in 7 hours and 15 minutes, saving energy at the same time. If the equipment were run for a full 12-hour cycle, it could filter and sanitize 25,200 gallons effectively.

Commercial codes vary as to circulation requirements, but short of some theme parks, wave pools, and special effect pools, virtually all of them could operate without submerged suction outlets and most of their circulation systems are already capable of providing 100% of the flow from the skimmers or gutter system.

Finally, consider existing public pools. Old, single drain pools should be the highest priority when considering drain safety, since they represent the greatest potential hazard. Why? Because they are prone to having older covers and sumps on single-source piping connected directly to a pump. These covers and sumps have probably degraded and weakened over time, posing a greater risk of failure. The solution, in almost every case, is a relatively simple re-piping at the equipment to reverse the flow and transform the main drain suction outlet into a return inlet. Disconnect the drain(s) from the suction side of the pump and re-connect them to the return side of the system after the heater and sanitizer. By converting the drain(s) to a return, circulation and sanitation can be greatly improved and you have successfully "designed out" the primary cause of suction entrapment in a pool. If there is a concern for enough water to supply the pump in a

residential application, a skimmer could be added or the flow rate could be reduced. As shown above, most residential pools currently flow at a rate exceeding the needs of the system.

Most commercial pools are already sized to have the capacity to deliver all of the required system flow from the skimmers or overflow gutter. If the piping is not accessible or for some reason cannot be reversed, permanent drain disablement is the next best option. Permanently "glue in" a plug or fill the drain outlet with concrete.

Even in the case of flow reversal or drain disablement, it is still critically important to keep listed safety covers in place to prevent a limb entrapment or mechanical entrapment.

The Consumer Product Safety Commission has reported 155 entrapment incidents over a 17-year period from February1985 through August 2002. Of the 155 data files, there were 141 that provided enough information to categorize. Of the reported incidents, 52% occurred in residential pools and 48% in public pools.

CPSC DATA

Entrapment Type	# Entrapped	# Deaths	% Deaths
Hair	50	14	28%
Limb	39	10	26%
Body	47	8	17%
Evisceration	5	0	0%

These incidents were investigated, analyzed, discussed, and categorized – all in the effort to find solutions and prevent such tragedies in the future.

The *ANSI/APSP-7 Standard for Suction Entrapment Avoidance in Swimming Pools, Wading Pools, Spas, Hot Tubs, and Catch Basins* offers this technology and other options that are completely consistent with the federal Virginia Graeme Baker Pool and Spa Safety Act which, too, allows for pools to be built without a main drain.

For further study and test data, go to this scientific Fluent Study[ix] and review this Dye Test Video[x] of water entering a drain flowing at 800 gpm under only 11 inches of water. Note that the dye casually disperses and is not immediately "sucked" into the drain.

The conclusion of all these investigations is that none of the reported entrapment incidents would have or could have occurred if there were no submerged suction outlets. The message is clear. Where possible, "design out" the main drain – but if drains are used, they need to be safeguarded with existing technology.

[i] *ANSI/APSP-7 Standard for Suction Entrapment Avoidance in Swimming Pools, Wading Pools, Spas, Hot Tubs, and Catch Basins,* The Association of Pool & Spa Professionals (the ANSI/APSP-7 standard was approved in 2006 by the American National Standards Institute).

[ii] During the 2004 U.S. Vice-Presidential Debate (October 5, 2004, in Cleveland, Ohio), Senator John Edwards stated: "It turns out the company knew of 12 other children who had either been killed or severely injured by the same problem. They hid it. They didn't tell anybody. They could have fixed it with a 2-cent screw. That's wrong."

[iii] U.S. Consumer Product Safety Commission, Virginia Graeme Baker Pool and Spa Safety Act, CPSC Staff's Guide to Complying With the Law (2008).

[iv] "Eliminating the Risk of Swimming Pool Drains," *Fluent News: Applied Computational Dynamics*, Volume XV, Issue 2 (2006).

[v] Kentucky State Code: 902 KAR 10:120. Kentucky public swimming and bathing facilities.

[vi] "Limb entrapment in a swimming pool suction outlet: A multidisciplinary approach to in-hospital extraction," Injury Extra, Toosy, N.A. *et al.*, Volume 37, pp. 225-337 (2006).

[vii] "A Draining Experience – a pool builder's fight to change Florida's dual main drain code and 50-year-old industry assumptions," *Pool and Spa News*, April 2003.

[viii] "Considering an Option," *WaterShapes* magazine, Volume 10, Number 11 (2008).

[ix] "Computer Simulation Shows Pools Can Be Made Safer by Eliminating Drains," 2006 (http://www.fluent.com/solutions/sports/CS103-trilogy-pools.pdf).

[x] "Drain Testing Using Dye for Effect on Pool Circulation," 2008 (http://www.youtube.com/watch?v=0IOUGhuKkSM).

Disclaimer

This article contains information believed to be accurate and correct as of the date of publication by the members of The Association of Pool & Spa Professionals (APSP) who have reviewed it, including members of the APSP Technical Committee, under whose auspices this article was prepared. The information contained in this article does not constitute legal advice. The Association of Pool & Spa Professionals makes no claim, promise or guarantee about the accuracy, completeness or adequacy of the information contained in this article, and accordingly assumes no liability for the use of the information contained herein. The Association of Pool & Spa Professionals will not be liable for direct, indirect (including, but not limited to, any loss of business or anticipatory profits), incidental or consequential damages resulting from reliance on the information contained in this article.

Copyright Notice

Copyright © 2009 by The Association of Pool & Spa Professionals (APSP), 2111 Eisenhower Avenue, Alexandria, VA 22314-4695. All rights reserved and all commercial use of the contents prohibited except if expressly authorized in writing by the association. Opinions expressed in this article do not necessarily represent official positions or policies of APSP. Published in February 2009.