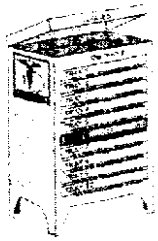

TRAY 6
EVALUATING JOB RISK FACTORS

EVALUATING JOB RISK FACTORS

The current scientific literature contains many proposed reference levels or guidelines for gauging whether certain workplace conditions and job task demands may pose a risk of WMSDs. Although these recommendations are based on various assumptions and are subject to change with additional data, they offer a basis for making judgments about certain job risk factors. Exhibits of NIOSH investigations in the main text used several of these sources in making risk factor assessments. In these situations, special equipment and procedures were used to measure different characteristics of the job conditions and the exposure factors of consequence in rating the presence or absence of significant risk factors for WMSDs. The special equipment and procedures used for these purposes will not be described here since they go beyond the level of simple data gathering presented in this document. Instead, some general principles will be mentioned that govern the ratings of the different factors. Citations to articles describe the techniques and equipment for making actual job risk factor determinations.

Applying reference levels or guidelines is often a controversial process. NIOSH has included these references or guidelines in this primer because they have been published in the scientific literature and have been used by NIOSH in some workplaces to evaluate specific work situations. However, most have not been extensively tested to determine their usefulness to identify hazardous situations accurately. Most scientists who proposed these guidelines realized that they were based on limited data, but they were developed to meet the needs of those who must evaluate workplaces on the basis of the current knowledge.

Work Space Features

Steps in making judgments about the adequacy of work spaces would consist of considering (1) the physical makeup of the worker population, (2) the specific body parts involved in particular tasks, and (3) whether the workstation features are fixed or adjustable. Finding workers who do similar work but differ widely in height, weight, and other body dimensions is not uncommon. The problem is whether workstation features such as bench or desk heights, access to tools, and space clearances can comfortably fit the range of body sizes. Indeed, a problem may exist if some workers are engaged in tasks in which they are constantly bending over a work surface or stretching to reach needed parts. Seated work with insufficient leg room under work tables is a problem because workers have to adopt awkward postures. Adjustable workstation features, if present, can ease these as well as other problems posed by the type of work. As an example, Tray 6–A displays work surface heights judged suitable for standing work involving precision, light assembly, and heavy duty tasks. The range of bench heights in this case

Tray 6–A. Recommended Workstation Measurements*

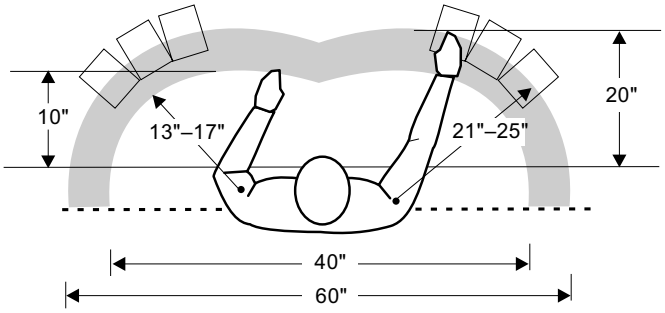

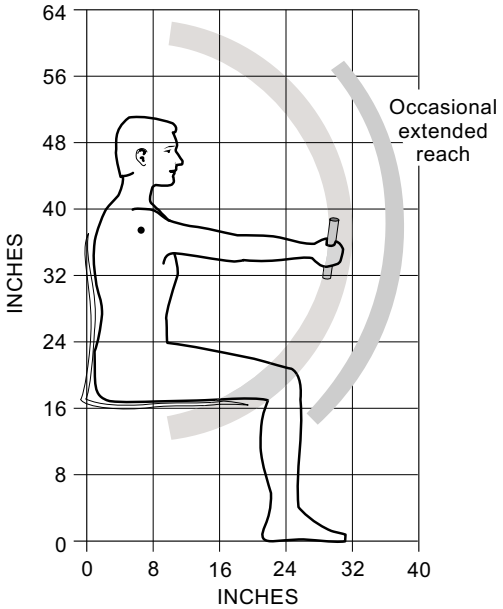

SEATED WORK:
Primary ☐ and secondary ▒ areas for table top work.
Optimal work surface height varies with the work performed:
- Precision work = 31–37 in.
- Reading/writing = 28–31 in.
- Typing/light assembly = 21–28 in.
- Seat and back rest heights should be adjustable as noted in chair requirements below.

SEATED WORK:
Boundaries for vertical reaches for grasping objects.

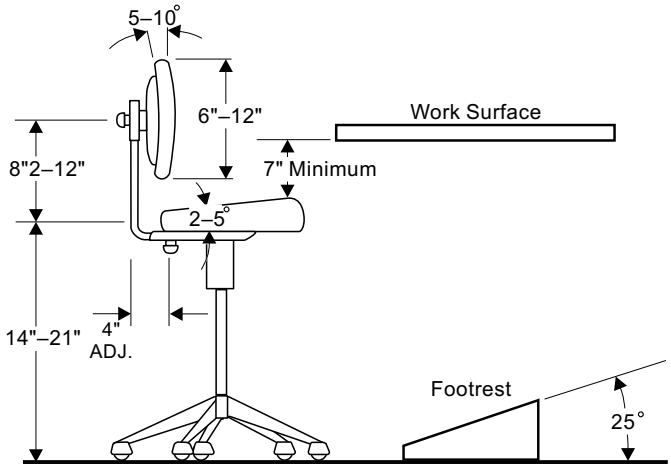

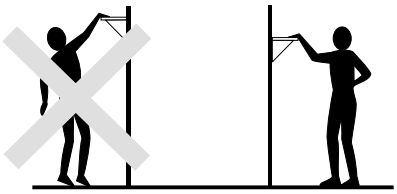

STANDING WORK:
Shelf heights to which a free-standing person can reach and place a hand flat on a shelf should not exceed 60 in.

STANDING WORK:
Workbench heights should be
— above elbow height for *precision work*,
— just below elbow height for *light work*, and
— 4–6 in. below elbow height for *heavy work*.

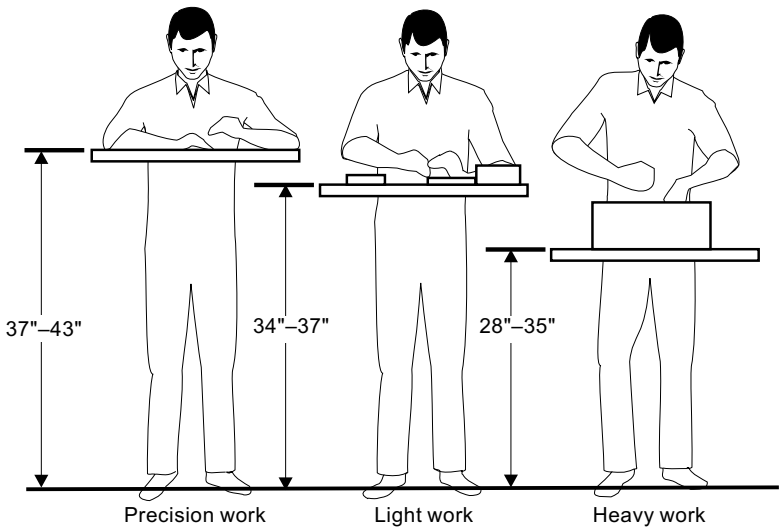

*Adapted in part from Grandjean E [1982] (*Fitting the Task to the Man: An Ergonomic Approach*. London: Taylor & Francis Ltd.) and UAW-GM [1990] (*UAW-GM Ergonomics Handbook*. Madison Heights, Michigan: Center for Health & Safety).

is intended to accommodate all but extremely tall or extremely short workers, regardless of gender. If a work surface height is not adjustable, a platform may be used to raise a short worker, or a pedestal can raise the height of the work surface for a taller worker.

Workstation layout can accommodate body size characteristics of the workforce. Some general guidelines are as follows:

- Avoid placing needed tools or other items above shoulder height.
- Position items for the shortest arm reach to avoid overstretching while reaching up or down.
- Keep frequently used tools or items close to and in front of the body.
- Position items for taller workers so that workers do not have to bend while reaching down.
- Ensure that items to be lifted are kept between hand and shoulder height.

Tray 6–A also describes an optimum layout for seated work. Boundaries take into account the range of functional reaches for most of the working population. For tabletop work, the space is divided into primary and secondary task areas. The primary area represents the space recommended for doing usual work activities; the secondary task area is for doing occasional work activities.

Data on body dimensions and reach distances when standing and sitting for men and women are cited in the literature for different percentages of the U.S. population as well as for populations in other countries and regions of the world. The following text includes these data and discusses their importance in the design of work spaces to fit the user population:

Eastman Kodak Company [1983]. Ergonomics design for people at work, Vol. 1. New York, NY: Van Nostrand Reinhold Company.

Other references suggesting recommended workplace layouts are as follows:

Kroemer K, Kroemer H, Kroemer-Elbert K [1994]. Ergonomics—how to design for ease and efficiency. Englewoods Cliffs, NJ: Prentice-Hall.

Grandjean E [1982]. Fitting the task to man. London, England: Taylor and Francis.

Woodson WE, Tillman B, Tillman P [1992]. Human factors design handbook. 2nd ed. New York, NY: McGraw Hill, Inc.

UAW-GM Center for Health and Safety [1990]. Ergonomics handbook, 29815 John R. Road, Madison Heights, MI.

Sanders MS, McCormick EJ [1987]. Human factors in engineering and design. 6th ed. New York, NY: McGraw Hill.

Manual Materials Handling—Lifting

In 1981, NIOSH developed an equation [NIOSH 1981] to rate lifting tasks in terms of whether the loads were excessive. A revised version of the equation was published in 1993 [Waters et al. 1993]. The latter formula takes into account six different factors in defining a recommended weight limit (RWL) for lifting and lowering of loads. The formula is designed to assess only certain lifting and lowering tasks (e.g., standing, two-handed, smooth lifting of stable objects in unrestricted spaces). The six factors, each of which requires actual measurements or numerical ratings on a scale, are as follows:

- Horizontal location of the load relative to the body
- Vertical location of the load relative to the floor
- Vertical distance the load is moved
- Frequency and duration of the lifting activity
- Asymmetry (lifts requiring twisting or rotation of the trunk or body)
- Quality of the worker's grip on the load

The RWL probably represents a load that nearly all (i.e., 90% of the adult population) can lift for up to 8 hours without substantially increasing the risk of musculoskeletal disorders to the lower back. Comparing the actual load weight for a task with the computed RWL estimates the risk presented by the task. For loads that exceed the RWL for a task, the factors contributing most to the excess risk can be identified. This information will suggest where control measures should have their greatest benefits.

Materials describing the NIOSH lifting formula, including its scientific justification, its limitations, and its user guidance (with sample applications and computations), are available in the following document:

> Waters TR, Putz-Anderson V, Garg A [1994]. Applications manual for the revised NIOSH lifting equation. DHHS (NIOSH) Publication No. 94–110, National Institute for Occupational Safety and Health, 4676 Columbia Parkway, Cincinnati, OH. (The manual is available from NTIS. For ordering information, call the NTIS Sales Desk at 703–487–4560. The NTIS order number for this document is PB94–176930LJM.)

Other models for rating lifting tasks in terms of risk for low back disorders have been developed. The University of Michigan two-dimensional and more current three-dimensional approaches estimate the amount of compressive forces on spinal discs in the low back as well as the muscle strength needed for a person to perform the lifting task in question. Load weight, lift height, hand location, and hip and joint angles for the observed lifting act are measured and serve as input to these calculations. Risk estimates are based on the percentages of the U.S. male workforce who would have the strength capacity to withstand the compressive forces that may be generated. Disc compression forces of 770 lb and greater have been identified with increasing rates of reported low back pain and thus would pose a significant hazard. The following user friendly computer software can be used to make these calculations and estimate these risks:

> 3D Static Strength Prediction Program, Version 3.0 [1995]. University of Michigan Software:

Wolverine Tower, 3003 South State Street, Ann Arbor, MI 48109.

Other details of the three-dimensional model are found in the following:

Chaffin DB, Andersson GBJ [1991]. Occupational Biomechanics. 2nd ed. New York, NY: John Wiley & Sons Inc.

Another model offered by Marras et al., [1993; 1995] differs from both the NIOSH and Michigan formulations in requiring measurements of trunk motion in estimating lifting risks for low back disorders. A special lumbar motion monitor, worn as a back pack, is used for this purpose. For the same lifting rates, load weight and postural factors, higher peak, and average velocity measurements for trunk bending in certain directions and twisting movements will amplify the risk of low back problems. Further details about this model appear in the following two references:

Marras WS, Lavender SE, Leurgens SE, Rajulku SL, Allread WG, Fathallah FA et al. [1993]. The role of dynamic three-dimensional trunk motion in occupationally-related work-related low back disorders: the effect of workplace factors, trunk motion characteristics on risk of injury. Spine *18*(5):617–628.

Marras WS, Lavender SE, Leurgens SE, Fathallah FA, Ferguson SA, Allread WG, et al. [1995]. Biomedical risk factors for occupationally-related low back disorders. Ergonomics *28*(2):377–410.

Manual Materials Handling—Pushing, Pulling, and Carrying

Men and women performing pushing, pulling, and carrying tasks under laboratory conditions have been asked to judge the maximum loads or force levels that they believe are acceptable. Varying the frequency rate as well as the push, pull, or carry distances affects these judgments. The resulting data offer a reference for (1) evaluating whether these kinds of materials handling jobs are potentially problematic, and (2) setting future design or redesign requirements for similar tasks. The procedure for making this assessment includes a number of steps. The first is to identify the particular activity in question (i.e., pushing, pulling, or carrying). For pushing and pulling tasks, the initial and sustained forces involved in handling the load are then measured, usually by a strain gauge or "fish scale." For carrying tasks, the weight of the object being carried is measured, the frequency of the activity per min is determined, and measurements are taken of the vertical distance of the hands from the floor when the object is carried. These measurements are compared with tabled values corresponding to the task and considered acceptable for 75% and 90% of both male and female populations. For most protection, NIOSH recommends using the 90% table values. Finding the measured values to exceed these table values may suggest needs for controls to reduce task risk factors. Details of this procedure and the tables for rating the conditions are contained in the following document:

Snook SH, Ciriello VM [1991]. The design of manual handling tasks: revised tables of maximum acceptable weights and forces. Ergonomics *34*:1197–1213.

Vibration—Whole-Body

Work conditions that involve sitting, standing, or lying on a vibrating surface produce whole-body vibration. Excessive levels and durations of exposure to whole-body vibrations may contribute to back pain and performance problems. The International Standards Organization (ISO) and American Conference of Governmental Industrial Hygienists (ACGIH) have proposed duration limits for vibration levels to reduce these problems. These limits take into account the fact that whole-body vibrations may be transmitted along three different axes corresponding to back-to-chest, right-to-left, and foot-to-head movements and that the body is more tolerant of certain vibration frequencies than others. Procedures for measuring and analyzing vibration are complex. They require use of special equipment, such as lightweight accelerometers. Accelerometers are positioned to take concurrent readings along the three axes. These readings are taken by frequency bands with the results compared with the vibration limits proposed for various exposure times. Added details about the measurement procedure appear in the following references:

ISO (International Organization for Standardization) [1985]. Evaluation of human exposure to whole-body vibration. Geneva, Switzerland: ISO Report No. ISO–2631.

ACGIH [1996]. Threshold limit values for chemical and physical agents and biological exposure indices: whole-body vibration. Cincinnati, OH: American Conference of Governmental Industrial Hygienists, pp. 123–131.

Hand-Arm Vibration

Vibrating handtools or work pieces transmit vibrations to the holder and, depending on the vibration level and duration factors, may contribute to Raynaud's syndrome or vibration-induced white finger disorders. These disorders show a progression of symptoms beginning with occasional or intermittent numbness or blanching of the tips of a few fingers to more persistent attacks, affecting greater parts of most fingers and reducing tactile discrimination and manual dexterity. Measurements of hand-arm vibration, like whole-body vibration, are made along three axes. Accelerometers are used for these readings with the data collected and analyzed to take into account any changes in vibration hazard and frequency. Other details regarding the measurement procedures appear in the following references:

ANSI [1986]. American national standard—guide for measurement and evaluation of vibrations transmitted to the hand. New York, NY: American National Standards Institute, Inc., ANSI S3.34.

ACGIH [1996]. Threshold limit values for chemical and physical agents and biological exposure indices: hand-arm vibration. Cincinnati, OH: American Conference of Governmental Industrial Hygienists, pp. 84–87.

These references propose limiting the values for exposure to the hand for the dominant frequency of vibration in any of the three directions. Measured vibration levels found to exceed the limits shown would dictate the need for actions to reduce the intensity or duration of the exposure.

NIOSH developed a recommended standard for hand-arm vibration that is not based on exposure limits, but focuses on engineering controls, work practices, and protective clothing to minimize vibration exposures. A cornerstone of this approach is medical monitoring for early identification of any signs of hand-arm vibration disorders among exposed workers. For details, see the following document:

> NIOSH [1989]. NIOSH criteria for a recommended standard: occupational exposure to hand-arm vibration. Cincinnati, OH: U.S. Department of Health and Human Services, Public Health Service, Centers for Disease Control, National Institute for Occupational Safety and Health, DHHS (NIOSH) Publication No. 89–106.

Repetition

A series of motions performed every few seconds with little variation may produce fatigue and muscle-tendon strain. If adequate recovery time is not allowed for these effects to diminish, or if the motions also involve awkward postures or forceful exertions, the risk of actual tissue damage and other musculoskeletal problems will probably increase. A task cycle time of less than 30 sec has been considered as "repetitive." Evidence that shows a link between highly repetitious actions and the development of WMSDs appears in the following reference:

> Bernard BP, ed. [in press]. Musculoskeletal disorders and workplace factors: evidence for a causal relationship. Cincinnati, OH: U.S. Department of Health and Human Services, Public Health Service, Centers for Disease Control and Prevention, National Institute for Occupational Safety and Health.

Estimates vary as to repetition rates that may pose a hazard, because other factors, such as force and posture, also affect these determinations. One proposal for defining high risk repetition rates for different body parts is shown in the chart in Tray 6–B.

Tray 6–B. High Risk Repetition Rates by Different Body Parts

From Kilbom Å [1994]. Repetitive work of the upper extremity; Part II: The scientific basis for the guide. Int J Ind Erg *14*:59–86.

Body Part	Repetitions Per Minute
Shoulder	More than 2½
Upper Arm/Elbow	More than 10
Forearm/Wrist	More than 10
Finger	More than 200

The reader is cautioned not to judge the risk of WMSDs solely on the basis of repetition. As already noted, much depends on force and the postural factors that reflect the effort intensity of each action. Admittedly, this is more difficult to measure than repetition rate. In making risk

determinations, NIOSH typically supplements repetition measurements with ratings of the forces being exerted (using force gauges and subjective ratings of effort levels) and postural deviations of the body parts that may be involved (derived from time-motion analyses and other techniques). High repetitiveness when combined with high external forces and extreme postures probably represents the highest risk of WMSDs.

Physical Energy Demands

Muscular exertions to meet the physical demands of work need ample blood flow to carry oxygen to the tissues and carry away certain by-products from metabolic processes. Fatigue is experienced when the cardiovascular system cannot furnish sufficient oxygen to the muscles involved in coping with the imposed workload. Oxygen consumption measurements offer a direct means for determining the energy demands of a job. Heart rate is a less direct measurement, but heart rate reacts faster to an imposed work load. Portable direct reading instruments are available for capturing both kinds of data. Job energy demands may be determined by monitoring the oxygen consumption or heart rate of a few representative workers while they perform their usual tasks. Tables published in different sources use these measures to estimate the "heaviness" of work. The table values offer a basis for gauging whether job energy demands may be excessive and require rest or break periods to reduce fatigue, which is believed to increase a worker's risk of musculoskeletal injury.

Tables and procedures for collecting oxygen consumption and heart rate data appear in the following references:

Eastman Kodak Company [1986]. Ergonomic design for people at work. Vol. 2. New York, NY: Van Nostrand Reinhold.

Astrand P, Rodahl K [1986]. Textbook of work physiology: physiological basis of exercise. New York, NY: McGraw Hill Book Co.

NIOSH [1986]. Criteria for a recommended standard: occupational exposure to hot environments. Cincinnati, OH: U.S. Department of Health and Human Services, Public Health Service, Centers for Disease Control, National Institute for Occupational Safety and Health, DHHS (NIOSH) Publication No. 86–113.

Another way for assessing the degree of physical effort is to have workers rate the perceived exertion in performing a work task. One scale especially designed for this purpose includes values with verbal reference points which range from"very, very light" to "very, very heavy" as aids to making these judgements. Ratings on such a scale have been found to correlate highly with physiological measures such as heart rate and offer an alternative to evaluating physical effort which is both convenient and inexpensive. Information about this type of scale and similar ones proposed for measuring the intensity of physical work appears in the following document:

Krawczyk S [1996]. Psychophysical methodology and the evaluation of manual materials handling and upper extremity intensive work. Chapter 6. In: Bhattacharya A, McGlothlin JD, eds. Occupational ergonomics. New York, NY: Marcel Dekker, Inc.

Thermal Stressors

Cold and hot working conditions can create added problems in assessing risk factors for WMSDs. Keeping hands warm may require gloves which, in turn, may cause workers to grip handtools more forcefully, resulting in added stress to the hands and wrists. More forceful gripping may also occur under hot conditions because sweating may increase the slipperiness of handtools. Workstation clearances should take into account workers wearing extra clothing for thermal protection in the cold. At the other extreme, hot work conditions may reduce a worker's capacity to do heavy physical work. In this situation, cardiac output needed to keep the body's temperature from rising too high limits the amount of blood that can deliver oxygen to the muscles. Fatigue buildup would be more readily experienced in these situations. NIOSH has published recommended exposure limits (RELs) for work under hot environmental conditions. These limits are provided for heat-acclimatized and nonacclimatized workers when performing tasks requiring different levels of energy expenditure. For details, see the following document:

NIOSH [1986]. NIOSH criteria for a recommended standard: occupational exposure to hot environments. Cincinnati, OH: U.S. Department of Health and Human Services, Centers for Disease Control, Public Health Service, National Institute for Occupational Safety and Health, DHHS [NIOSH] Publication No. 86–113.

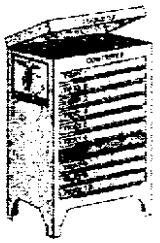

TRAY 7
EVALUATING CONTROL EFFECTIVENESS

EVALUATING CONTROL EFFECTIVENESS

The ergonomics primers and manuals listed in Tray 10 of the Toolbox suggest ways to redesign work methods, tools, and workstations to control risk factors for musculoskeletal disorders. The reader is referred to these texts which contain numerous recommendations and illustrations of control strategies. To complement this presentation, this section lists published reports that show the effectiveness of various control measures that have been put into place. Shown in Tray 7–A are examples of engineering interventions. The work group at risk, the problem or risk factors of concern, the specific control measure introduced, and the results are described. Tray 7–B lists reports describing various forms of control measures including administrative approaches.

The main text stressed the need to evaluate the benefits of control actions. The measures noted in these reference lists reflect different ways for making such an assessment. Most are objective measurement procedures (e.g., differences in before and after readings of vibration levels, muscle activity using electromyography [EMG], and biomechanical force computations). Some show reductions in WMSD cases, lost time, or sick leave. Subjective techniques can also be used, such as the before and after use of the symptom survey described earlier in Tray 4–B. Admittedly, some of the listed intervention efforts may be more useful than others. For example, some solutions may be very task specific and have little generalizable value. Depending on the methods used in the data collection and evaluation, certain studies may yield stronger evidence of a positive intervention result. No attempt has been made to rate the studies for either generalizability or strengths of the efforts to evaluate the success of the interventions. The references for the various citations in Trays 7–A and 7–B are found at the end of this section.

Tray 7–A. Select Studies Demonstrating Effectiveness of Engineering Controls for Reducing Exposure to Ergonomic Risk Factors

Study	Target population	Problem and risk factor	Control measure	Effect
Miller et al. [1971]	Surgeons (use of bayonet forceps)	Muscle fatigue during forceps use, frequent errors in passing instruments	Redesigned forceps (increased surface area of handle).	Reduced muscle tension (determined by EMG) and number of passing errors.
Armstrong et al. [1982]	Poultry cutters (knives)	Excessive muscle force during poultry cutting tasks	Redesigned knife (reoriented blade, enlarged handle, provided strap for hand).	Reduced grip force during use, forearm muscle fatigue.
Knowlton and Gilbert [1983]	Carpenters (hammers)	Muscle fatigue, wrist deviation during hammering	Bent handle of hammer and its diameter.	Produced smaller decrement in strength and reduced ulnar wrist deviation.
Habes [1984]	Auto workers	Back fatigue during embossing tasks	Designed cut-out in die to reduce reach distance.	Reduced back muscle fatigue as determined by EMG.
Goel and Rim [1987]	Miners (pneumatic chippers)	Hand-arm vibration	Provided padded gloves.	Reduced vibration by 23.5% to 45.5%.
Wick [1987]	Machine operators in a sandal plant	Pinch grips, wrist deviation, high repetition rates, static loading of legs and back	Provided adjustable chairs and bench-mounted armrests; angled press; furnished parts bins.	Reduced wrist deviation and compressive force on lumbar-sacral discs from 85 to 13 lb.
Little [1987]	Film notchers	Wrist deviation, high repetition rates, pressure in the palm of the hand imposed by notching tool	Redesigned notching tool (extended, widened and bent handles, reduced squeezing force).	Reduced squeezing force from 15 to 10 lb; eliminated wrist deviation; increased productivity by 15%.
Johnson [1988]	Power handtool users	Muscle fatigue, excessive grip force	Added vinyl sleeve and brace to handle.	Reduced grip force as determined by EMG.
Fellows and Freivalds [1989]	Gardeners (rakes)	Blisters, muscle fatigue	Provided foam cover for handle.	Reduced muscle tension and fatigue buildup as determined by EMG.

Tray 7–A (Continued). Select Studies Demonstrating Effectiveness of Engineering Controls for Reducing Exposure to Ergonomic Risk Factors

Study	Target population	Problem and risk factor	Control measure	Effect
Andersson [1990]	Power handtool users	Hand-arm vibration	Provided vibration damping handle.	Reduced hand-transmitted vibration by 61% to 85%.
Radwin and Oh [1991]	Trigger-operated power hand tool users	Excessive hand exertion and muscle fatigue	Extended trigger.	Reduced finger and palmar force during tool operation by 7%.
Freudenthal et al. [1991]	Office workers	Static loading of back and shoulders during seated tasks	Provided desk with 10 degree incline and adjustable chair; provided adjustable tables.	Reduced moment of force on lower spinal column by 29% and by 21% on upper part.
Powers et al. [1992]	Office workers	Wrist deviation during typing tasks	Provided forearm supports and a negative slope keyboard support system.	Reduced wrist extension.
Erisman and Wick [1992]	Assembly workers	Pinch grips, wrist deviation	Provided new assembly fixtures.	Eliminated pinch grips; reduced wrist deviations by 65%; reduced cycle time by 50%.
Luttmann and Jager (1992)	Weavers	Forearm muscle fatigue	Redesigned workstation (numerous changes).	Reduced fatigue as measured by EMG and improved quality of product.
Fogleman et al. [1993]	Poultry workers (knives)	Excessive hand force, wrist deviation	Altered blade angle and handle diameter.	Wrist deviation reduced with altered blade angle.
Lindberg et al. [1993]	Seaming operators	Awkward, fixed (static) neck and shoulder postures, monotonous work movements, high work pace	Automated seaming task.	Provide freer head postures during automated seaming; reduced loads on neck and shoulder muscles as indicated by EMG; reduced perceived exertion.

Tray 7–A (Continued). Select Studies Demonstrating Effectiveness of Engineering Controls for Reducing Exposure to Ergonomic Risk Factors

Study	Target population	Problem and risk factor	Control measure	Effect
Nevala-Puranen et al. [1993]	Dairy farmers	Whole-body fatigue, bent and twisted back postures, static arm postures	Installed rail system for carrying milking equipment.	Heart rate decreased; bent and twisted back and trunk postures decreased by 64%; above-shoulder arm postures cut in half; mean milking time per cow decreased by 24%.
Degani et al. [1993]	Construction workers, landscapers (shovels)	Whole-body and local muscle fatigue	Modified shovel handle (mounted second shaft on handle).	EMG in the lower back muscles reduced; exertion showed less effort.
Gallimore and Brown [1993]	VDT operators	Visual fatigue and body discomfort due to operators adopting static postures	Fitted VDT screens with a device to move the image further away from the eye.	Glare reduced and awkward neck postures reduced for bifocal wearers.
Wick and Deweese [1993]	Shipping clerks	Wrist deviations; high pinch grip forces; awkward shoulder, neck, and back postures	Lowered and tilted the workstation; raised storage racks; provided a cutting device for wrapping materials.	Workstation changes reduced awkward wrist, shoulder, back, and neck postures; cutting tool reduced pinch grip problem; cycle time reduced by 12%.
Peng [1994]	Assemblers (percussive rivet tools)	Vibrations	Modified rivet hammer in numerous ways; introduced "recoilless" bucking bar.	Vibration at the bucking bar and rivet hammer handle reduced.

Tray 7–B. Select Studies of Various Control Strategies for Reducing Musculoskeletal Injuries and Discomfort

Study	Industry	Study group	Intervention method	Summary of results	Additional comments
Itani et al. [1979]	Film manufac-turing	124 film rollers in two groups	Reduced work time; increased number of rest breaks.	Reduced and shoulder disorders and low back complaints; improved worker health.	Productivity after the intervention was found to be 86% of the preintervention level.
Luopajarvi et al. [1982]	Food production	200 packers	Redesigned packing machine.	Decreased neck, elbow, and wrist pain.	Not all recommended job changes were implemented; workers still complained.
Drury and Wick [1984]	Shoe manufac-turing	Workers at 6 factory sites	Redesign workstation.	Reduced postural stress; increased productivity.	Trunk and upper limbs were most affected by changes.
Westgaard and Aaras [1984, 1985]	Cable forms production	100 workers	Introduced adjustable workstations and fixtures and counter-balanced tools.	Turnover decreased; musculoskeletal sick leave reduced by 67% over 8-year period; productivity increased.	Reductions in shoulder, upper back muscle load verified by EMG.
McKenzie et al. [1985]	Telecom-munication equipment manufac-turing	6,600 employees	Redesigned handles on power screwdrivers and wire wrapping guns and instituted plant-wide ergonomics program.	Incidence rate of repetitive trauma disorders decreased from 2.2 to .53 cases/200,000 work hours; lost days reduced from 1001 to 129 in 3 years.	
Echard et al. [1987]	Automobile manufac-turing	(Not indicated)	Redesigned tools, fixtures, and work organization in assembly operations.	Reduced long-term upper extremity and back disabilities; reduced carpal tunnel syndrome surgeries by 50%.	

Tray 7–B (Continued). Select Studies of Various Control Strategies for Reducing Musculoskeletal Injuries and Discomfort

Study	Industry	Study group	Intervention method	Summary of results	Additional comments
Lutz and Hansford [1987]	Medical products manufac-turing	More than 1,000 workers	Introduced adjust-able workstations and fixtures and mechanical aids to reduce repetitive motions, and job rotation.	Medical visits reduced from 76 to 28 per month.	Employees also expressed enthusiasm for exercise program introduced with other interventions.
Jonsson [1988]	Telephone assembly, printed circuit card manufac-turing, glass blowing, mining	25 workers	Introduced job rotation.	Job rotation in light-duty tasks were not as effective as in dynamic heavy-duty tasks.	Measured static load on shoulder upper back muscles with EMG.
Gears et al. [1988]	Rubber and plastic parts manufac-turing	87 plants within one company	Ergonomics training and intervention program introduced; added material handling equipment and workstation modifications to eliminate postural stresses.	Lost time prevalence rates at two plants reduced from 4.9 and 9.7/200,000 hours to 0.9 and 2.6, respectively, within 1 year and maintained over a 4-year period.	Success attributed to increased training, awareness of hazards, and improved communication between management and workers.
Tadano [1990]	Office	500 VDT operators	Provided training, redesigned workstations, and incorporated additional breaks and exercises into the work schedule.	Cumulative trauma disorder cases reduced from 49 in the 6 months preceding the intervention to 24 in the 6 months following the intervention.	
Hopsu and Fouhevaara [1991]	Office	8 female cleaners	Provided training and greater flexibility in the work and eliminated strictly proportioned work areas and time schedules.	Average sick leave decreased from 20 days/year before the intervention to 10 days/year 2 years after intervention.	Mean maximum VO^2 rate increased, mean heart rate decreased after intervention.

Tray 7–B (Continued). Select Studies of Various Control Strategies for Reducing Musculoskeletal Injuries and Discomfort

Study	Industry	Study group	Intervention method	Summary of results	Additional comments
LaBar [1992]	Household products manufac-turing	800 workers	Introduced adjustable workstations, improved the grips on handtools, improved parts organization, and work flow.	Reduced injuries (particularly back) by 50%.	Company also had a labor management safety committee to investigate ergonomics-related complaints.
Orgel et al. [1992]	Grocery store	23 employees	Redesigned checkout counter to reduce reach distances, installed a height-adjustable keyboard, and trained workers to adopt preferred work practices.	Decreased self-reported neck, upper back, and shoulder discomfort; no change in arm, forearm, and wrist discomfort.	The study lacked a reference group not subject to the same interventions for making suitable comparisons.
Rigdon [1992]	Bakery	630 employees	Formed union management committee to study cumulative trauma problems which led to workstation changes and tool modifications; improved work practices.	Cumulative trauma cases dropped from 34 to 13 in 4 years; lost days reduced from 731 to 8 during the same period.	Union advocated more equipment to reduce manual material handling.
Garg and Owen [1992]	Nursing home	57 nursing assistants	Implemented patient transferring devices.	IR of back injuries decreased from 83 to 43 per 200,000 work hours following the intervention; no lost or restricted work days during the 4 months following the intervention.	
Halpern and Davis [1993]	Office	90 office workers	Adjusted workstations according to the workers' anthropometric dimensions.	Body part discomfort decreased; perceived efficiency and usability of the equipment increased.	

Tray 7–B (Continued). Select Studies of Various Control Strategies for Reducing Musculoskeletal Injuries and Discomfort

Study	Industry	Study group	Intervention method	Summary of results	Additional comments
Narayan and Rudolph [1993]	Medical device assembly plant	316 employees	Redesigned workstation to reduce reach distances, provided adjustable chairs and footrests, and provided fixtures and pneumatic gripper to eliminate pinch grips.	Plant-wide CTD incidence rate reduced from 13.7 to 11.3 per 200,000 worker hours after intervention, plant-wide severity rate reduced from 154.9 lost-time days to 67.8 lost time days per 200,000 worker hours	Not all jobs in plant affected by changes.
Parenmark et al. [1993]	Chain saw assembly plant	279 workers	Increased number of workers and tasks, provided training, reduced work pace, and adopted new wage system and flexible working hours.	Sick leave dropped from 17 to 13.7 days per worker per year; labor turnover dropped from 35% to 10%; assembly errors cut by 3%to 6%; total production cost reduced by 10%; productivity not affected.	Difficult to pinpoint which factor had biggest impact.
Shi [1993]	County government (various occupations represented)	205 workers	Introduced education, back safety training, and physical fitness activities and provided equipment and facility improvements (e.g., additional material handling equipment).	Back pain prevalence declined modestly; significant improvement in satisfaction, and a reduction in risky lifting behaviors were reported; a savings of $161,108 was realized, giving a 179% return in the investment.	
Reynolds et al. [1994]	Apparel manufac-turing	18 operators	Introduced height- and tilt-adjustable work stands, additional jigs, anti-fatigue mats, and automatic thread cutters.	Body part discomfort reduced in shoulders, arms, hands, and wrists; no injury costs incurred in 5 months following intervention.	Used worker participation approach; productivity significantly increased after intervention.

Tray 7–B (Continued). Select Studies of Various Control Strategies for Reducing Musculoskeletal Injuries and Discomfort

Study	Industry	Study group	Intervention method	Summary of results	Additional comments
Aaras [1994]	Telephone exchange manufac-turing, office	96 workers (divided into 4 groups)	Provided adjustable workstations and additional work space; tools were suspended and counterbalanced.	Significant reduction in intensity and duration of neck pain reported after intervention.	Reductions in static loading on the neck and shoulder muscles after intervention were confirmed via EMG.
Moore [1994]	Automotive engine and transmission manufac-turing	5 workers	Eliminated manual flywheel truing operation by implementing a mechanical press.	29% decrease in musculoskeletal disorders; 78% decrease in upper extremity CTDs; 82% reduction in restricted or lost work time.	Used participatory (team) approach to select intervention method.
NIOSH [1994]	Red meatpacking	3 beef and pork processing companies	Implemented a participatory (labor management) ergonomics program.	Results varied: only two teams able to introduce changes to address identified problems; some evidence that incidence and severity of injury was reduced following introduction of an ergonomics program.	Additional follow-up needed to evaluate intervention effectiveness.
NIOSH [1996]	Soft drink beverage delivery	9 driver-sales-workers	Installed pull-out steps, external handles and multi-shelving units to ease access to products, substituted plastic containers for glass to reduce weight, and redesigned carton for easier manual handling. In addition, 2-wheel hand trucks were modified to move easier over rough terrain.	Reductions in biomechanical stressors for the back and shoulders were observed when removing products from truck; heart rate decreased for 6 of 9 drivers despite increase in product volume. Reports of worker fatigue dropped; reductions in multiple handling of beverage cases and decreased awkward posture were also observed.	

Trays 7–A and 7–B. References

Aaras A [1994]. Relationship between trapezius load and the incidence of musculoskeletal illness in the shoulder. Int J Ind Ergonomics *14*(4):341–348.

Andersson ER [1990]. Design and testing of a vibration attenuating handle. Int J Ind Ergonomics *6*(2):119–126.

Degani A, Asfour SS, Waly SM, Koshy JG [1993]. A comparative study of two shovel designs. Appl Ergonomics *24*(5):306–312.

Drury CG, Wick J [1984]. Ergonomic applications in the shoe industry. In: Proceedings of the International Conference on Occupational Ergonomics, pp. 489–493.

Echard M, Smolenski S, Zamiska M [1987]. Ergonomic considerations: engineering controls at Volkswagen of America. In: Ergonomic interventions to prevent musculoskeletal injuries in industry. Cincinnati, OH: American Conference of Governmental Industrial Hygienists, Industrial Hygiene Science Series, pp. 117–31.

Erisman J, Wick J [1992]. Ergonomic and productivity improvements in an assembly clamping fixture. In: Kumar S, ed. Advances in industrial ergonomics and safety IV. Philadelphia, PA: Taylor & Francis, pp. 463–468.

Fellows GL, Freivalds A [1989]. The use of force sensing resistors in ergonomic tool design. In: Proceedings of the Human Factors Society 33rd Annual Meeting, pp. 713–717.

Fogleman MT, Freivalds A, Goldberg JH [1993]. An ergonomic evaluation of knives for two poultry cutting tasks. Int J Ind Ergonomics *11*(3):257–265.

Freudenthal A, van Riel MPJM, Molenbroek JFM, Snijders CJ [1991]. The effect on sitting posture of a desk with a ten-degree inclination using an adjustable chair and table. Appl Ergonomics *22*(5):329–336.

Gallimore JJ, Brown ME [1993]. Effectiveness of the C-sharp: reducing ergonomics problems at VDTs. Appl Ergonomics *24*(5):327–336.

Garg A, Owen B [1992]. Reducing back stress to nursing personnel: an ergonomic intervention in a nursing home. Ergonomics *35*(11):1353–1375.

Geras DT, Pepper CD, Rodgers SH [1988]. An integrated ergonomics program at the Goodyear Tire and Rubber Company. In: Mital A, ed. Advances in industrial ergonomics and safety. Bristol, PA: Taylor & Francis, pp. 21–28.

Goel VK, Rim K [1987]. Role of gloves in reducing vibration: an analysis for pneumatic chipping hammer. Am Ind Hyg Assoc J *48*(1):9–14.

Habes DJ [1984]. Use of EMG in a kinesiological study in industry. Appl Ergonomics *15*(4):297–301.

Halpern CA, Davis PJ [1993]. An evaluation of workstation adjustment and musculoskeletal discomfort. In: Proceedings of the 37th Annual Meeting of the Human Factors Society, Seattle, WA, pp. 817–821.

Hopsu L, Louhevaara V [1991]. The influence of educational training and ergonomic job redesign intervention on the cleaner's work: a follow-up study. In: Designing for everyone: proceedings of the Eleventh Congress of the International Ergonomics Association. Vol. 1. Paris, France, pp. 534–536 .

Itani T, Onishi K, Sakai K, Shindo H [1979]. Occupational hazard of female film rolling workers and effects of improved working conditions. Arh Hig Rada Toksikol *30*(Suppl):1243–1251.

Johnson SL [1988]. Evaluation of powered screwdriver design characteristics. Hum Factors *30*(1):61–69.

Jonsson B [1988]. Electromyographic studies of job rotation. Scand J Work Environ Health *14*(1):108–109.

Knowlton RG, Gilbert JC [1983]. Ulnar deviation and short-term strength reductions as affected by a curve handled ripping hammer and a conventional claw hammer. Ergonomics *26*(2): 173–179.

LaBar G [1992]. A battle plan for back injury prevention. Occup Hazards *54*:29–33.

Little RM [1987]. Redesign of a hand tool: a case study. Semin Occup Med *2*(1):71–72.

Lindberg M, Frisk-Kempe K, Linderhed J [1993]. Musculoskeletal disorders, posture and EMG temporal pattern in fabric seaming tasks. Inter J Ind Ergonomics *11*(3): 267–276.

Luopajarvi T, Kuorinka I, Kukkonen R [1982]. The effects of ergonomic measures on the health of the neck and upper extremities of assembly-line packers—a four year follow-up study. In: Noro K, ed. Proceedings of the 8th Congress of the International Ergonomics Association, Tokyo, Japan, pp. 160–161.

Luttmann A, Jager M [1992]. Reduction in muscular strain by work design: electromyographical field studies in a weaving mill. In: Kumar S, ed. Advances in industrial ergonomics and safety IV. Philadelphia, PA: Taylor & Francis, pp. 553–560.

Lutz G, Hansford T [1987]. Cumulative trauma disorder controls: the ergonomics program at Ethicon, Inc. J Hand Surg *12A*(5, Part 2): 863–866.

McKenzie F, Storment J, Van Hook P, Armstrong TJ [1985]. A program for control of repetitive trauma disorders associated with hand tool operations in a telecommunications manufacturing facility. Am Ind Hyg Assoc J *46*(11):674–78.

Miller M, Ransohoff J, Tichauer ER [1971]. Ergonomic evaluation of a redesigned surgical instrument. Appl Ergonomics *2*(4):194–197.

Moore JS [1994]. Flywheel tuning: a case study of an ergonomic intervention. Am Ind Hyg J *55*(8):236–244.

Narayan M, Rudolph R [1993]. Ergonomic improvements in a medical device assembly plant: a field study. In: Proceedings of the 37th Annual Meeting of the Human Factors Society, Seattle, WA, pp. 812–816.

NIOSH [1994]. Participatory ergonomics interventions in meatpacking plants. Cincinnati, OH: U.S. Department of Health and Human Services, Public Health Service, Centers for Disease Control and Prevention, National Institute for Occupational Safety and Health, DHHS (NIOSH) Publication No. 94–124.

NIOSH [1996]. Ergonomic interventions for the soft drink beverage delivery industry. Cincinnati, OH: U.S. Department of Health and Human Services, Public Health Services, Centers for Disease Control and Prevention, National Institute for Occupational Safety and Health, DHHS (NIOSH) Publication No. 96–109.

Nevala-Puranen N, Taattola K, Venalainen JM [1993]. Rail system decreased physical strain in milking. Int J Ind Ergonomics *12*(4):311–316.

Orgel DL, Milliron MJ, Frederick LJ [1992]. Musculoskeletal discomfort in grocery express checkstand workers: an ergonomic intervention study. J Occup Med *34*(8):815–818

Parenmark G, Malmvisk AK, Ortengren R [1993]. Ergonomic moves in an engineering industry: effects on sick leave frequency, labor turnover and productivity. Int J Ind Ergonomics *11*(4):291–300.

Peng SL [1994]. Characteristics and ergonomic design modifications for percussive rivet tools. Int J Ind Ergonomics *913*(3):171–187.

Powers JR, Hedge A, Martin MG [1992]. Effects of full motion forearm supports and a negative slope keyboard system on hand-wrist posture while keyboarding. Proceedings of the Human Factors Society 36th Annual Meeting, Atlanta, GA, pp. 796–800.

Radwin RG, Oh S [1991]. Handle and trigger size effects on power tool operation. Volume 2. In: Proceedings of the Human Factors Society 35th Annual Meeting, San Francisco, CA, pp. 843–847.

Reynolds JL, Dury CG, Broderick RL [1994]. A field methodology for the control of musculoskeletal injuries. Appl Ergonomics *25*(1):3–16.

Rigdon JE [1992] . The wrist watch: how a plant handles occupational hazard with common sense. The Wall Street Journal 9128192.

Snook SH, Campanelli RA, Hart JW [1978]. A study of three preventive approaches to low back injury. J Occup Med *20*:478–481.

Tadano P [1990]. A safety/prevention program for VDT operators: one company's approach. J Hand Therapy *3*(2):64–71.

Westgaard RH, Aaras A [1984]. Postural muscle strain as a causal factor in the development of musculoskeletal illnesses. Appl Ergonomics *15*(3):162–174.

Westgaard RH, Aaras A [1985]. The effect of improved workplace design on the development of work-related musculoskeletal illnesses. Appl Ergonomics *16*(2):91–97.

Wick JL [1987]. Workplace design changes to reduce repetitive motion injuries in an assembly task: a case study. Semin Occup Med *2*(1):75–78.

Wick JL, Deweese R [1993]. Validation of ergonomic improvements to a shipping workstation. In: Proceedings of the 37th Annual Meeting of the Human Factors Society, Seattle, WA, pp. 808–811.

TRAY 8
HEALTH CARE MANAGEMENT

HEALTH CARE MANAGEMENT

Health care of WMSDs is still a developing field. Professionals providing health care services to companies must remain alert to any new developments. Recommended practices based on the latest and best information are described in reports listed in Tray 8–A. In taking steps to address WMSDs, employers should make efforts to select health care providers with training and interest in treating WMSDs.

Tray 8–A. Articles on Health Care Management Practices

ANSI [1996]. Control work-related cumulative trauma disorders. Part 1: upper extremities, medical management chapter. Working Draft. American National Standards Institute.

Hales TR, Bertsche PK [1992]. Management of upper extremity cumulative disorders. Am Assoc Occup Health Nursing J *40*(3):118–128.

Kuorinka I, Forcier L eds. [1995]. Medical management: an overview. Chapter 9. In: Work-Related Musculoskeletal Disorders (WMSDs): a reference book for prevention. Bristol, PA: Taylor and Francis, Inc.

Parker KG, Imbus HR [1992]. Effective occupational medicine for control of cumulative trauma disorders—current issues and ergonomic solutions: a systems approach. Chapter 6. Boca Raton, FL: Lewis Publishers, CRC Press, Inc.