This Health Hazard Evaluation (HHE) report and any recommendations made herein are for the specific facility evaluated and may not be universally applicable. Any recommendations made are not to be considered as final statements of NIOSH policy or of any agency or individual involved. Additional HHE reports are available at http://www.cdc.gov/niosh/hhe/reports

NIOSH

HEALTH HAZARD EVALUATION REPORT

HETA 91-209-2249
SEAWAY PAINTING, INC.
ANNAPOLIS, MARYLAND

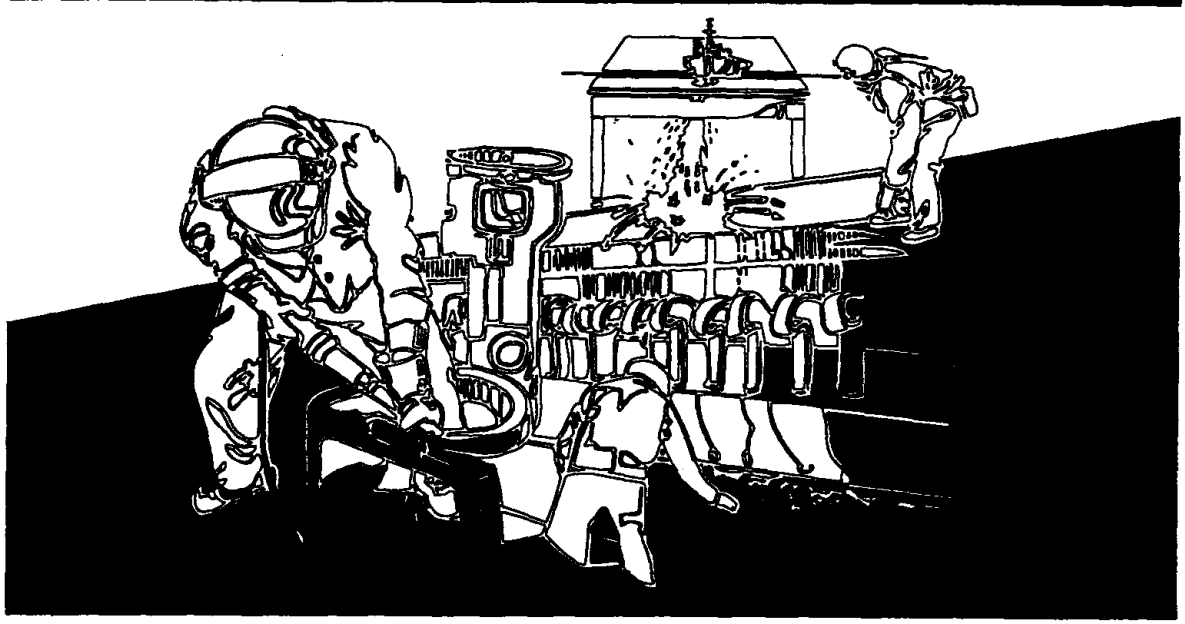

U.S. DEPARTMENT OF HEALTH AND HUMAN SERVICES
Public Health Service
Centers for Disease Control
National Institute for Occupational Safety and Health

CDC
CENTERS FOR DISEASE CONTROL

PREFACE

The Hazard Evaluations and Technical Assistance Branch of NIOSH conducts field investigations of possible health hazards in the workplace. These investigations are conducted under the authority of Section 20(a)(6) of the Occupational Safety and Health Act of 1970, 29 U.S.C. 669(a)(6) which authorizes the Secretary of Health and Human Services, following a written request from any employer and authorized representative of employees, to determine whether any substance normally found in the place of employment has potentially toxic effects in such concentrations as used or found.

The Hazard Evaluations and Technical Assistance Branch also provides, upon request, medical, nursing, and industrial hygiene technical and consultative assistance (TA) to federal, state, and local agencies; labor; industry; and other groups or individuals to control occupational health hazards and to prevent related trauma and disease.

Mention of company names or products does not constitute endorsement by the National Institute for Occupational Safety and Health.

HETA 91-209-2249
AUGUST 1992
SEAWAY PAINTING, INC.
ANNAPOLIS, MARYLAND

NIOSH INVESTIGATORS:
Aaron Sussell, M.P.H.
R. Leroy Mickelsen, M.S.
Carol Rubin, D.V.M., M.P.H

I. SUMMARY

A request was received from a consultant to the facility owner, Anne Arundel County (Maryland) Department of Utilities, for a NIOSH Health Hazard Evaluation (HHE) to evaluate health hazards during repainting of an elevated steel water storage tank. The request concerned worker exposures to lead during abrasive blasting removal of lead-based paint from the tank within containment structures. The tank was located in a residential area near Annapolis, Maryland. The County contractually required comprehensive environmental and worker protection programs, including total containment of abrasive blasting operations, with provision of exhaust ventilation and dust collection systems, and abrasive recycling. Construction workers at the site were protected by the State of Maryland comprehensive standard for lead in construction, which is similar to the Occupational Safety and Health Administration (OSHA) lead standard for general industry.

NIOSH investigators conducted site visits in association with this HHE on May 8, and May 28-30, 1991. The purpose of the site visits was to observe work, assess control measures, and measure workers' exposure to lead with environmental and medical monitoring.

On May 29, 1991, none of the six workers sampled during moving and set-up of the primary containment structure had personal airborne lead exposures exceeding the OSHA Permissible Exposure Limit (PEL) of 50 micrograms per cubic meter ($\mu g/m^3$), (range: not detected [ND] to 35 $\mu g/m^3$). On May 30th, during abrasive blasting operations, personal exposures for three workers outside containment were below, but approached, the OSHA PEL (range: ND to 47 $\mu g/m^3$). Personal sampling of blasters inside the containment structure was generally not successful due to rapid failure or loss of sampling equipment. Two inside-respirator samples were obtained for blasters, with time-weighted average concentrations of 16 and 25 $\mu g/m^3$. A blaster sampled while performing dust blowdown in containment after abrasive blasting was exposed to an average of 470 $\mu g/m^3$ during the 30-minute procedure. Personal airborne lead exposures for blasters, irrespective of respiratory protection worn, may have been similar to four area airborne lead concentrations (measured by an independent consultant) in the containment structure during abrasive blasting on June 6, 1991, (range: 620 to 3000 $\mu g/m^3$).

The use of a total containment structure, provided with exhaust ventilation and dust collection systems, resulted in low measured airborne lead levels outside containment. No lead was detected in area samples collected around the tank during containment moving and set-up, or during abrasive blasting operations (minimum detectable concentrations: 4 - 6 $\mu g/m^3$).

Ingestion was also a potential route of lead exposure. Paint fines, chips and dust collected by the dust collection and ventilation systems contained potentially hazardous amounts of total lead: 1,300 to 3,200 ppm. All of the inside surfaces of the containment structure sampled, which workers handle during containment take-down, moving, and set-up, were contaminated with relatively high concentrations of lead (range: 2400 to 9700 $\mu g/ft^2$). Local weather conditions at the time of the NIOSH evaluation produced a high potential for heat stress inside the containment structure.

The mean worker blood lead level (BLL) decreased from 34 $\mu g/dL$ (range: 15 to 44 $\mu g/dL$) pre-job to 28 $\mu g/dL$ (range: 6 to 43 $\mu g/dL$) during the job, and no worker had a BLL increase.

Environmental monitoring indicated that a potential health hazard due to lead exposures existed during repainting of a steel elevated water tank. However, the worker protection program at this job appeared to effectively control worker exposures to lead. The comprehensive approach to worker protection utilized at this site demonstrated that compliance with Maryland requirements, and the OSHA general industry lead standard is technically feasible, and protective to construction workers. Continuation of this approach is recommended for other similar jobs.

KEYWORDS: SIC 1629 (heavy construction, not elsewhere classified), lead, abrasive blasting, construction industry, water tank repair.

II. INTRODUCTION

On May 3, 1991, the National Institute for Occupational Safety and Health (NIOSH) received a request from an engineering consultant (Datanet Engineering, Inc.) for a Health Hazard Evaluation (HHE) to evaluate worker exposures to lead during exterior repainting of the Old Mill elevated water storage tank near Annapolis, Maryland. The request was made on behalf of the tank owner, Anne Arundel County Department of Utilities, and the painting contractor, Seaway Painting, Inc. Due to its previous experience with environmental lead hazards resulting from abrasive blasting removal of lead-based paint from a water tank, the County contractually required comprehensive environmental and worker protection programs. This included total containment of abrasive blasting operations with portable structures provided with filtered exhaust ventilation, and the use of recycled abrasive to reduce hazardous waste generation. Additionally, the County hired an independent consultant (Datanet Engineering, Inc.) to provide technical oversight of the painting job, as well as environmental engineering and industrial hygiene services. Construction workers at the site were protected by the Maryland Occupational Safety and Health Standard for Occupational Exposure to Lead in Construction Work (Division of Labor and Industry, COMAR 09.12.32), which is a comprehensive standard similar to the Occupational Safety and Health (OSHA) lead standard for general industry (29 CFR 1910.1025). To evaluate worker exposures to lead NIOSH investigators conducted site visits on May 8, and May 28-30, 1991.

III. BACKGROUND

The 135-foot high elevated water storage tank, erected in 1971, consisted of a double-toroid tank on a fluted central pillar, with nine 4-ft diameter support legs. The capacity was one million gallons, with an estimated exterior surface area of 35,000 square feet, painted with "red lead" primer, and an alkyd lead-based paint. The original coatings, which were reportedly about six mils in thickness and eight percent lead by weight, had spotty surface corrosion at the time the project began. Based on previous experience, and the tank's location adjacent to suburban single- and multiple-family residences, and a public park, Anne Arundel County was concerned about environmental releases of lead dust during abrasive blasting operations. The interior surfaces of the tank had been repainted prior to the NIOSH evaluation. The repainting job began in April 1991 and ended in June 1991.

Repainting Process

The painting contractor was responsible for removal of the existing lead-based paint, and surface corrosion, with abrasive blasting to prepare the exterior steel surfaces to a specified commercial blast grade (Steel Structures Painting Council SSPC-SP-6).[1] Due to the use of steel grit abrasive, the surface preparation reportedly significantly exceeded this grade, and was generally near-white steel (SSPC-SP-10). The work crew on-site generally included a foreman, two blasters, two helpers, and two equipment men.

The abrasive blasting material used was angular steel grit (40-60 sieve, previously unused material). Abrasive material was conducted from a mobile blasting pot to hand-held blasting nozzles with compressed air. During blasting, an aerosol comprised of corrosion, paint, steel, and grit particles was produced, and dispersed by the velocity and pressure of the abrasive blast directed at the tank surfaces. The used steel grit was collected, separated from paint dust and fines with an air-wash system, and continuously recycled during the job. As the steel grit was used, fresh material was added periodically to make up for losses due to grit erosion and breakdown.

Work hours on the site were limited by several factors. Due to local noise control restrictions, abrasive blasting at the site was limited to the hours of 8:00 a.m. to 5:00 p.m. Additionally, the containment structure could not be erected when local wind conditions were gusty, or greater than 20 mph. At the time of the NIOSH site visits, daily high temperatures (90°F and above), the use of protective clothing, and significant solar heat gain in the containment structure (up to 40°F above ambient) produced conditions with a high potential for heat stress. Due to the heat stress potential, the contractor limited daily work periods in containment on certain days, and the ventilation system was used to provide outside air to cool the containment structure, even when no abrasive blasting was in progress. (Prior to the NIOSH visits, one worker reportedly had experienced heat exhaustion while working in the containment structure with an ambient air temperature of 140°F). The blasters were provided with vortex-type air coolers for their supplied air respirators.

Immediately after the day's abrasive blasting, blasters used compressed air wands to blowdown surface dust and grit remaining on the clean steel surfaces. With the containment structure still in place, blowdown was followed by inspection, and application of (lead-free) epoxy primer and intermediate coats (with airless spray) to prevent "flash rust" formation.

Typical Schedule for Tank Section

DAY 1:	
8-10 hours	take-down and move containment structure
DAY 2:	
1 hour	set up equipment
2 hours	abrasive blasting
0.5 hour	surface blowdown
1.5 hours	paint-primer coat
3 hours	lunch break, and site housekeeping
0.5 hour	paint-intermediate coat
1 hour	clean up

Blasting and painting for each section of the tank and central support column followed the typical time schedule at left. This routine was repeated 18 times to cover the tank and central support column. Each of the nine support legs of the tower was blasted and painted separately, using the smaller portable containment structure. It reportedly took about one day for each support leg for abrasive blasting, and application of primer and intermediate coats.

After the entire tank was cleaned and painted with primer, the final coat, a (non-lead-based) polyurethane paint, was applied with brush and roller, with no containment.

The workers used personal protective equipment, including disposable protective coveralls (Tyvek®), heavy cotton canvas coveralls (blasters), disposable earplugs, and respirators provided by the contractor. Blasters used NIOSH type CE continuous flow supplied air helmets (Bullard®), provided with vortex-type air coolers. Other job categories were provided half-mask air purifying respirators with high-efficiency particulate air (HEPA) filters.

The painting contractor provided medical monitoring for lead exposure. Personal hygiene facilities were provided on site, which included handwashing sink with hot and cold running water, and a portable trailer containing two showers with hot and cold running water, storage lockers, and changing areas. The trailer was separated into "clean" and "dirty" areas by the showers, which were located in the middle.

Containment Enclosure and Engineering Controls

Containment enclosures used on-site were primarily designed for total containment of lead-containing dust and debris during paint removal, to prevent environmental contamination. However, for worker protection the design provided relatively small cross-sectional areas inside, so that air velocities created

by exhaust ventilation of the structures would be increased relative to conventional containment enclosures. The structures were designed and constructed on-site by a sub-contractor, Harrison Industrial Technologies, Inc. (see Figure 1). A mobile, diesel-powered system (Alpha 2000® Series, IPEC Advanced Systems, Inc.) was used to provide exhaust ventilation, collect lead dust, and recycle abrasive grit.

The primary containment structure, designed to cover a 1/18th section of the tank and central support column (about 1800 ft^2), consisted of translucent rigid panels and flexible plastic tarps attached to a lightweight frame (see Figure 1). The containment structure hung from a forged metal ring attached to the top opening of the tank, and extended down the side of the tank to a rigid-walled exhaust plenum on the ground. The top section of the containment structure was moved to each successive section of the tank by rotating it on wheels attached to frame members, while lower portions of the structure were lowered, moved, and re-erected (see Figure 2). The walls on the sides and top were enclosed with a flexible polypropylene tarp reinforced with nylon fiber mesh (GeoTarp®, Eagle Industries). The tarp sections were attached to the frame, which consisted primarily of aluminum alloy piping, with short sections of polyvinyl chloride (PVC) tubing that were cut longitudinally to form "C" fittings which snapped onto the alloy piping. Parts of the raised platform of the exhaust plenum were constructed of rigid panels of corrugated polycarbonate plastic (Polylite®, General Electric). Floors inside the containment were constructed of aluminum grating to support workers and equipment and to allow debris to flow down to the collection point at the bottom of containment. The containment structure was held tightly against the tank with rubber-sheathed steel cables, and by positive outside air pressure during abrasive blasting operations.

The containment structures were designed with relatively consistent cross-sectional areas, in order that the desired ventilation airflow rate could be maintained throughout. For the primary structure, the ventilation system was designed to pull outside air in at the top of the tank and exhaust contaminated air from a ground-level plenum, with both airflow and gravity pulling contaminants down. The portable exhaust plenum was connected to a trailer-mounted dust collection system with two 18-inch flexible ducts (see Figure 3). A site diagram showing the containment structure in relation to support equipment is shown in Figure 4.

The dust collection system, which was powered by two 85-horsepower diesel compressors, was designed to provide 10,000 cubic feet/minute (cfm) exhaust,

5000 cfm through each flexible duct. The system was intended to provide 100 feet/minute (fpm) minimum air velocity throughout the primary containment structure, with -0.05 inches water column negative air pressure (with respect to the outside). The dust collector was operated during abrasive blasting, surface blowdown, and spray painting operations to improve visibility and reduce worker exposures.

A separate smaller containment structure of the same materials was used to paint the tank support legs. The octagonal structure was built to enclose a 10-ft vertical section, and was moved up and down the support legs with two air-powered steel cable climbers (Astrohoist®, 1500 lb. capacity). Exhaust ventilation, designed to provide 10,000 cfm, was provided to the structure with a single 18-inch flexible duct during abrasive blasting, surface blowdown, and spray painting operations on the columns.

During blasting, abrasive material and the non-airborne paint particles which fell to the bottom of the containment structures were moved to the abrasive recycling system with a separate four-inch suction line. The abrasive material was cleaned for continuous reuse in a rotary drum grit classifier with triple air wash and heavy particle separation. Paint chips and dust from this process were exhausted to the dust collector, where they were recovered.

IV. EVALUATION METHODS

A. Environmental evaluation

During site visits, work practices were observed, and walk-through surveys of work areas were conducted. Additionally, environmental monitoring for lead, and a ventilation assessment were conducted during the May 28-30 site visit. Personal breathing zone (PBZ) and area air samples, surface dust wipe samples, and bulk material samples were collected to assess worker exposures to airborne lead, and to lead-contaminated surface dust. NIOSH air monitoring was designed to cover those portions of the workshift where all or nearly all the exposure to airborne lead was expected.

NIOSH analytical methods referenced below are described in the *NIOSH Manual of Analytical Methods, Third Edition*.[2] Each laboratory analysis has a limit of detection (LOD) and limit of quantitation (LOQ) dependent on the range and relative standard deviation of measurement. The respective LOD

and LOQ for each sample set were determined in the laboratory and are reported with the sampling results in tables later.

1. **Air Samples**

Area and PBZ air samples were collected with appropriate sampling media connected via Tygon® tubing to Gillian Hi Flow Sampler® battery-operated personal sampling pumps calibrated immediately, prior to, and after, sampling. The flow rates used for area and personal sampling were 3.0 liters per minute (ℓ/min), and 2.0 ℓ/min, respectively. The PBZ samples were collected in the breathing zone (at the shirt collar), unless otherwise noted.

For blasters, the samples were collected behind at the back of the blaster's neck to reduce sample loss from direct contact with high-velocity abrasive blast. The sampling filter cassettes were connected to belt-mounted sampling pumps via flexible (Tygon®) tubing placed next to the blaster's neck inside the elastic neck collar of the helmet.

Calibration of the sampling pumps on-site before and after sampling; and periodic flow checks during sampling were accomplished with Kurz Pocket Flow Calibrator™ mass flowmeters, which had been calibrated with a primary standard (bubble flowmeter). For subsequent calculation of sample volumes, the mean of the pre- and post-sampling flow rates was used. A minimum of two field blanks (sample media carried into the field, and handled like the other media, with the exception that they were not used to collect samples), representing at least 10% of samples, were prepared and submitted with each sample set.

Lead: Sample collection with a flow rate of 2.0 or 3.0 ℓ/min through 37-millimeter (mm), 0.8-micron (μm) pore size, cellulose ester membrane filters in closed-face cassettes; analysis by atomic absorption spectroscopy (AAS) with flame, NIOSH Method 7082, or AAS with graphite furnace, NIOSH Method 7105.

2. **Bulk Samples**

Lead and other metals: Bulk samples of abrasive material, soil, and paint were collected by transferring 1-10 grams of material into clean 20 milliliter (ml) glass vials with disposable wooden tongue depressors. Soil samples were collected from a depth of one centimeter or less. Bulk samples were analyzed by AAS with flame, NIOSH Method 7082, modified for the sample type.

Lead, surface dust: Samples were collected using commercial pre-moistened baby wipes (Chubs®) using a modification of the Department of Housing and Urban Development (HUD) "Laboratory Testing for Lead in Dust" procedure.[3] Surface dust samples were collected by: a) measuring off and marking a flat surface of about one square foot (ft^2); b) donning disposable gloves; c) taking a wipe from the container (the first wipe each day was discarded); d) folding the wipe in half and wiping the entire marked area with a series of horizontal strokes in an "S"-pattern (the wipe is not lifted); e) refolding the wipe with the dust side in and wiping the area in an "S"-pattern a second time at a 90° angle to the first pattern; f) folding the wipe again and wiping the area a third time in an "S"-pattern at a 90° angle to the previous pattern; and g) placing the folded baby wipe in a new sealable plastic bag. To reduce possible cross-contamination, the disposable gloves were changed after each sample was collected. Care was taken to use the same technique and wiping pressure for each sample to reduce variation in collection efficiency.

The wipes were wet-ashed with concentrated nitric and perchloric acids. Since a significant amount of unashable material remained after wet-ashing, these samples were leached overnight in dilute solutions of the same acids, then centrifuged. The supernatant solutions were used for analysis. The solutions were analyzed for lead by AAS with flame according to NIOSH Method 7082, modified for the sample type. Since this survey, NIOSH has recommended a new method for lead surface wipe sampling, which uses commercial handwipes (such as Wash'n Dri®) instead of baby wipes for lead surface wipe sampling.[4]

B. Ventilation of primary containment

Average air velocities in the containment structure were measured with a Kurz® Model 1040 hot-wire digital anemometer. Velocities and cross-sectional areas were measured at four locations: A) top of the tank, approximately 10 feet downstream of the air horn, B) under the tank, C) on the central support column, and D) in the two 18-inch exhaust ducts. Corresponding volumetric air flow rates (Q) were calculated from the average velocities (V) and cross-sectional areas (A), where Q = VA.

C. Medical evaluation

During the second NIOSH site visit, on May 29, 1991, all six current employees at the site were invited to complete an occupational health history questionnaire and provide a blood sample for determination of blood lead level (BLL) and zinc protoporphyrin (ZPP) concentrations. Blood samples were sent to an OSHA-approved laboratory (a listing is available from the OSHA Analytical Laboratory in Salt Lake City, Utah; telephone 801/524-4270).

NIOSH blood sampling results, which were collected approximately six weeks after the job began were compared to pre-job blood sampling results obtained by the employer, which were collected on April 9 and 11, 1991. The employer had also used an OSHA-approved laboratory for analysis of blood samples. Interview and clinical data were analyzed using EPIINFO, Version 5.0, a statistical software package for epidemiology developed by the Centers for Disease Control (CDC) and the World Health Organization (WHO).

V. EVALUATION CRITERIA

A. General guidelines

As a guide to the evaluation of exposures to chemical and physical agents in the workplace, NIOSH employs criteria which are intended to suggest levels of (airborne) exposure to which most workers may be exposed up to ten hours/day, 40 hours/week for a working lifetime without experiencing adverse health effects. It is important to note; however, not all workers will be protected from adverse health effects if their exposures are maintained below these levels. A small percentage may experience adverse health

effects because of individual susceptibility, a pre-existing medical condition, and/or a hypersensitivity (allergy). In addition, some hazardous substances may act in combination with other workplace exposures, the general environment, or with medications or personal habits of the worker to produce health effects even if the occupational exposures are controlled at the levels set by the evaluation criteria. Some substances are absorbed by direct contact with the skin and mucous membranes, or by ingestion, and thus the overall exposure may be increased above measured airborne concentrations. Evaluation criteria typically change over time as new information on the toxic effects of an agent become available.

The primary sources of evaluation criteria for the workplace are: NIOSH Criteria Documents and Recommended Exposure Limits (RELs),[5] the American Conference of Governmental Industrial Hygienists' (ACGIH) Threshold Limit Values (TLVs),[6] and OSHA Permissible Exposure Limits (PELs).[7] These values are usually based on a time-weighted average (TWA) exposure, which refers to the average airborne concentration of a substance over an entire 8-hour (PELs, TLVs) or up to 10-hour (RELs) workday. Concentrations are usually expressed in parts per million (ppm), milligrams per cubic meter (mg/m^3), or micrograms per cubic meter ($\mu g/m^3$). To compare results with the NIOSH, OSHA, and ACGIH criteria that are TWAs, it is sometimes useful to extrapolate 8-hr TWA exposures from sampling times of less than eight hours. In extrapolating 8-hr TWAs, an assumption is made that there was no other exposure to the compound(s) of interest over the remainder of the 8-hr workshift.

In addition, for some substances there are short-term exposure limits or ceiling limits which are intended to supplement the TWA limits where there are recognized toxic effects from short-term exposures.

B. Lead

Inhalation (breathing) of dust and fume, and ingestion (swallowing) of lead-contaminated mucus, or lead from hand-to-mouth contact with lead-contaminated objects are the major routes of worker exposure to lead. Once absorbed, lead accumulates in the soft tissues and bones, with the highest accumulation initially in the liver and kidneys.[8] Lead is stored in the bones for decades, and may cause toxic effects as it is slowly released over time. Overexposure to lead results in damage to the kidneys, gastrointestinal

tract, peripheral and central nervous systems, and the blood-forming organs (bone marrow).

The frequency and severity of symptoms associated with lead exposure increase with increasing BLLs. Health effects of lead intoxication include weakness, excessive tiredness, constipation, anorexia, abdominal pain, anemia, high blood pressure, irritability or anxiety, fine tremors, pigmentation on the gums ("lead line"), and "wrist drop."[9,10,11]

Overt symptoms of lead poisoning in adults generally begin at BLLs between 60 and 120 μg/dl. Neurologic, hematologic, and reproductive effects, however, may be detectable at much lower levels, and WHO has recommended an upper limit of 40 μg/dl for occupationally exposed adult males.[12] The mean serum lead level for U.S. men from 1976-1980 was 16 μg/dl.[13,14] However, with the implementation of lead-free gasoline and reduced lead in food, the 1991 average serum lead level of U.S. men was projected to drop below 9 μg/dl.[15]

An increase in an individual worker's BLL can mean that the worker is being overexposed to lead. While the BLL is a good indication of recent exposure to, and current absorption of lead, it is not a reliable indication of the total body burden of lead.[16] Lead can accumulate in the body over time and produce health effects long after exposure has stopped. Long-term overexposure to lead may cause infertility in both sexes, fetal damage, chronic kidney disease (nephropathy), and anemia.

Under the OSHA standard regulating occupational exposure to inorganic lead in general industry, the PEL is 50 $\mu g/m^3$ as an 8-hour TWA.[17] The standard requires semi-annual monitoring of BLL for employees exposed to airborne lead at or above the Action Level of 30 $\mu g/m^3$ (8-hour TWA), specifies medical removal of employees whose average BLL is 50 μg/dl or greater, and provides economic protection for medically removed workers. The construction industry was exempted from this regulation when it was promulgated in 1978. The current OSHA PEL for the construction industry is 200 $\mu g/m^3$. However, in Maryland there is a lead standard for construction which is similar to the federal general industry standard. The NIOSH REL for lead is less than 100 $\mu g/m^3$ as a TWA for up to ten hours. This REL is an air concentration to be maintained so that worker blood lead remains below 60 μg/100 grams of whole blood. NIOSH is presently reviewing literature on the health effects of lead to re-evaluate its REL. The OSHA PEL for general

industry is currently recommended by NIOSH investigators as a more protective criteria.

Recent studies suggest that there are adverse health effects at BLLs below the current evaluation criteria for occupational exposure. A number of studies have found neurological symptoms in workers with BLLs of 40 to 60 μg/dl. Male BLLs are associated with increases in blood pressure, with no apparent threshold through less than 10 μg/dl. Studies have suggested decreased fertility in men at BLLs as low as 40 μg/dl. Prenatal exposure to lead is associated with reduced gestational age, birthweight, and early mental development at prenatal maternal BLLs as low as 10 to 15 μg/dl.[18]

In recognition of the health risks associated with exposure to lead, a goal for reducing occupational exposure was specified in *Healthy People 2000*, a recent statement of national consensus and U.S. Public Health Service policy for health promotion and disease prevention. The goal for workers exposed to lead is to eliminate, by the year 2000, all exposures that result in BLLs greater than 25 μg/dl.[19]

In homes with a family member occupationally exposed to lead, lead dust may be carried home on clothing, skin, hair, and in vehicles. High BLLs in resident children, and elevated concentrations of lead in the house dust, have been found in the homes of workers employed in industries associated with high lead exposure.[20] Particular effort should be made to ensure that children of workers with lead poisoning, or who work in areas of high lead exposure, are tested for lead exposure (BLL) by a qualified health-care provider.

NIOSH and OSHA have recently published recommendations for construction workers potentially exposed to lead.[21,22] Engineering and work practice controls should be used to reduce employee exposures below the OSHA PEL for general industry (50 $\mu g/m^3$, 8-hr TWA). Medical monitoring, notification, and medical removal protection specified in the OSHA general industry lead standard should be applied to construction workers, except that more frequent monitoring (for example, monthly) may be necessary. Prior to job placement, these workers should receive a complete baseline health evaluation from an examining physician which includes medical and work histories, a physical examination, and appropriate physiologic and laboratory tests (blood pressure, blood testing, urinalysis, etc).

C. Lead in surface dust

There are currently no Federal standards governing the level of lead in surface dust in either occupational or non-occupational (i.e., residential) settings. However, lead-contaminated surface dust in either setting represents a potential exposure to lead through ingestion, especially by children. In workers, this may occur either by direct hand-to-mouth contact with the dust, or indirectly from hand-to-mouth contact via clothing, cigarettes, or food contaminated by lead dust. Standards established by HUD as final clearance standards for lead in house dust after lead abatement are an indication of what is "clean": floors, 200 micrograms per square foot ($\mu g/ft^2$); walls and window sills, 500 $\mu g/ft^2$; and window wells, 800 $\mu g/ft^2$. HUD also recommends the standard for floors be applied to exterior porches.[23] These criteria were not based on epidemiology, but were empirically established as feasible limits for clearance following final cleaning during residential lead-based paint abatement. HUD recommends the use of these criteria until they are refined or replaced through additional research.

D. Lead in soil

There are no Federal standards for occupational or childhood exposure to lead in soil. The CDC has previously stated (*Preventing Lead Poisoning in Young Children*--1985 edition) that soil concentrations exceeding 500-1,000 ppm appeared to cause increased BLLs in children. Based on this recommendation, the U.S. Environmental Protection Agency (EPA) Offices of Emergency and Remedial Response and Waste Programs Enforcement currently use an interim guideline for Superfund hazardous waste sites which specifies cleanup of soil to a total lead concentration in the range of 500 to 1000 ppm.[24]

The State of Minnesota has promulgated a standard applicable to lead in soil on residential property and playgrounds intended to prevent exposures that might result in elevated (>25 $\mu g/dl$) childhood BLLs. The standard was based on a health risk assessment model intended to provide a reasonable degree of protection for young children considering the potential contribution of soil and other sources of lead exposure such as paint and house dust. The standard requires abatement for total lead concentrations at or above 0.03 percent by weight (300 ppm) of soil.[25]

VI. RESULTS AND DISCUSSION

A. Environmental

Bulk samples of paint fines and chips from the grit classifier, recycled abrasive before and after cleaning, and dust from the dust collector were collected on May 8, 1991, and subsequently analyzed for lead; results are presented in Table 1. The fines, chips and dust contained a potentially hazardous amount of total lead, 1,300 to 3,200 ppm. Under the Federal Resource Conservation and Recovery Act (RCRA), solid waste material with a leachable lead concentration of 5 ppm or greater is classified and regulated as a characteristic hazardous waste (40 CFR 260).[26] A primary benefit of using an abrasive recycling system on this job was a reportedly significant reduction in the amount of hazardous wastes generated.

Results of samples of recycled abrasive indicated that lead contamination was significantly reduced in the grit classifier and air wash system, from 130 (before) to 13 (after) ppm lead by weight. Soil samples collected (on the same day) near the table outside the office trailer, and in a public park 100 yards away from the tank had lead concentrations of 190 and 10 ppm, respectively. Both soil lead concentrations were below the EPA guideline and Minnesota standard of 500 ppm and 300 ppm, respectively, for soil lead.

The results of five surface samples collected outside the containment structure, near the trailer which housed office and decontamination areas; and ten surface samples collected on inside surfaces of the primary containment structure are presented in Table 2. On the day of surface sampling, May 29, 1991, all of the workers were involved with moving the primary containment structure.

All of the surfaces sampled outside containment had detectable lead levels. Relatively low amounts of lead were found on the spigot of a 5-gallon water cooler outside the trailer, and a locker door inside the trailer on the "clean" side: 38 μg/sample, and 34 $\mu g/ft^2$, respectively. The lead concentration on the floor of the trailer on the "clean" side (130 $\mu g/ft^2$) was lower than the concentration measured on the floor of "dirty" side (610 $\mu g/ft^2$). The level on the "clean" side was less than the HUD clearance criteria of 200 $\mu g/ft^2$ for lead in surface dust after residential lead abatement. A surface lead concentration of 420 $\mu g/ft^2$ was measured on the work table directly outside the office trailer.

All of the inside rigid and flexible wall surfaces of the containment structure sampled were contaminated with relatively high concentrations of lead (range: 2400 to 9700 $\mu g/ft^2$). As an indication of the variability of surface concentrations and sampling, one NIOSH investigator sampled three adjacent areas (designated areas A, B, and C) of a rigid wall in the exhaust plenum; the respective concentrations measured were 3600, 4400, and 3500 $\mu g/ft^2$. As an indication of surface lead recoveries from this substrate, the surface wipes of areas B and C were repeated two more times. This sampling found 1100 and 860 $\mu g/ft^2$ (area B) and 960 and 940 $\mu g/ft^2$ (area C) for the second and third wipes, respectively.

The results of 22 area and PBZ air samples are presented in Table 2. Eighteen samples were collected by NIOSH investigators on May 29-30, 1991, and four samples were collected by Datanet Engineering on June 6, 1991, and provided to NIOSH for analysis.

On May 29th, all six workers present were sampled during moving and set-up of the primary containment structure. All six TWA personal lead exposures measured were below the OSHA PEL of 50 $\mu g/m^3$, ranging from not detected (less than 4 μ/m^3) to 35 μ/m^3. No lead was detected (less than 2 $\mu g/m^3$) in 9-hour area samples collected on a tank column and outside the office/decon trailer.

On May 30th, five workers were sampled during abrasive blasting operations. Personal sampling of two blasters for lead in the containment structure was not successful, due to failure or loss of sampling equipment. Generally, almost immediately after the blasters entered containment, the filter cassettes were knocked off the worker by the force of the abrasive blast rebound, and pump faults occurred as the plastic tubing was pinched between the worker and a ladder or the containment structure. Two inside-respirator samples were obtained for blasters, with TWA concentrations of 16 and 25 $\mu g/m^3$. A blaster was sampled while performing a 30-minute dust blowdown in containment after abrasive blasting, the TWA obtained was 470 $\mu g/m^3$. Outside containment, the exposures measured for two groundsmen and a foreman were below the OSHA PEL of 50 $\mu g/m^3$ (range ND to 47 $\mu g/m^3$). No lead was detected (range: <4 to <6 $\mu g/m^3$) in 5-hour area samples collected on a tank column and outside the office/decon trailer.

Due to the difficulties encountered in collecting personal samples in the containment structure, NIOSH investigators subsequently requested that

Datanet Engineering collect four representative area air samples during abrasive blasting inside containment. Four samples were collected on June 6, 1991, and submitted to NIOSH for analysis, results are presented in Table 2. The area concentrations 30 feet above (upstream) and 20 feet below (downstream) the blaster were 620 and 3000 $\mu g/m^3$, respectively. Area lead concentrations of 1900 and 1600 $\mu g/m^3$ were measured in samples collected adjacent to the blaster. Due to the relatively small cross-sectional area inside the containment structure, personal exposures for blasters may have been similar to these concentrations.

Personal exposures during abrasive blasting inside the primary containment may have exceeded the NIOSH recommended maximum use concentration of 1250 $\mu g/m^3$ (25 x OSHA PEL) for the type CE supplied-air respirators with continuous flow which were used. However, the two inside-respirator sample results (16 and 25 $\mu g/m^3$) indicated that the blasters actual exposures did not exceed the OSHA PEL for general industry.

B. Ventilation

A schematic of the ventilation system used with the primary containment structure is presented in Figure 5. An opening (about 3 x 3 feet, and 130 ft above ground) at the top of the primary containment structure served as the ventilation system inlet. A nominal 5000 cubic feet per minute (cfm) air blast horn was used to increase airflow into the inlet opening (measured flow from the horn was 4300 cfm). The general airflow through the system was from this inlet, into and down the inside of the containment structure, to an exhaust plenum at ground level, and into flexible ducts leading to the dust collection system. The containment did not form a perfect seal to the tank structure; from outside containment some fugitive airborne dust could be seen during abrasive blasting; and a noticeable amount of steel grit fell to the ground where it was collected on plastic tarps.

Airflow measurements were made at four locations in containment with the dust collection system operating, but not during actual abrasive blasting (designated A - D, see Figure 5). An average air velocity of 310 feet per minute (fpm) was measured and a corresponding volumetric flow rate of 19,000 cfm was calculated at point A, ten feet from the inlet blast horn at the top of containment. Because of the large amount of turbulence caused by high velocity flow through the air horn, the measurements at point A are suspect. Airflow patterns to determine the effect of turbulence near the air

horn were not conducted. An average air velocity of 60 fpm was measured at point B inside containment, with a corresponding calculated volumetric flow rate of 3500 cfm. Average air velocity at point C was 210 fpm, with a volumetric flow rate of 5000 cfm. The average air velocity at point D, in each of the flexible ducts was 2700 fpm, with a combined flow rate of 9600 cfm.

Differences in the measured volumetric flow rates at the air horn and locations B, C, and D were due to air leakage into and out of the containment structure. Flow measurements indicate that between the air horn at the top of containment and point B there was a loss of 800 cfm air, a net leak out of containment. Flow measurements indicated that from point B to D, 6200 cfm, or 64% of the total exhaust flow, had leaked into the containment system. The air leakage may have occurred through openings at the tank/containment interface, in the structure itself, or around the worker entry hatch located in the exhaust plenum. Air leaks, totalling 800 cfm, were measured at ground level near the worker entry hatch; it is likely that there were many other leaks, which were less obvious and more difficult to measure. It is doubtful that a totally airtight containment structure could have been achieved using the construction materials of choice; however it appeared feasible to improve ventilation efficiency. It should be noted that an airtight containment structure for abrasive blasting is not necessary as long as the exhaust airflow rate is sufficient to control airborne contaminants.

Local weather conditions at the time of the NIOSH evaluation produced a high potential for heat stress inside the containment structure. On May 30, 1991, the air temperature in containment was measured at 108°F at 5:00 p.m.

C. Medical

All six workers participated in employer sponsored pre-job testing for BLL and ZPP on April 9 and 11, 1991, and on-the-job testing by NIOSH on May 29, 1991. The mean worker BLL decreased from 34 μg/dL (standard deviation [S.D.] 10 μg/dL, range 15-44 μg/dL) pre-job to 28 μg/dL (S.D. 13 μg/dL, range 6-43 μg/dL) during the job. Each worker's BLL decreased, the range was from 1 to 10 μg/dL. Although none of the individual decreases were statistically significant (p-value > 0.05), the occurrence of six of six was ($p=0.03$). The pattern of decrease in BLL may have been due to inter-laboratory variation, however. No significant difference was found between the three blasters and three workers in other

job categories (foreman, helpers, equipment men) for either pre-job BLLS (blasters: mean = 34 μg/dL, S.D. = 2μg/dL; others: mean = 33 μg/dL, S.D. = 16μg/dL) or during-job BLLs (blasters: mean = 27 μg/dL, S.D. = 3 μg/dL, others: mean = 28 μg/dL, S.D. = 20 μg/dL).

- All of the workers had a history of recent occupational exposure to lead during repainting steel structures prior to the initiation of this job. The blood testing results indicate that the actual worker exposures to lead during this job were lower than previous exposures, and that actual personal lead exposures for blasters were not higher than other job categories.

Employer pre-job testing indicated that the mean ZPP concentration was 67 μg/dL (S.D. = 39, range: 31 to 137 μg/dL). NIOSH testing during the job found a mean ZPP concentration of 53 μg/dL (S.D. = 16, range: 30 to 73 μg/dL). Four workers pre-job, and two workers during the job had a ZPP level greater than 50 μg/dL, which may indicate chronic overexposure to lead, or (less probably in adult male lead-exposed workers) iron deficiency.

VII. CONCLUSIONS

The environmental sampling indicated that workers were exposed to a potential health hazard due to lead exposure during this job. It is likely that blasters were consistently exposed to airborne lead levels above the OSHA general industry PEL; for example, area samples collected near abrasive blasting inside containment ranged from 620 to 3000 $\mu g/m^3$. Two inside-respirator samples obtained from blasters had time-weighted average lead concentrations of 16 and 25 $\mu g/m^3$. Limited sampling did not indicate that workers outside containment were overexposed to airborne lead, although exposures approached the OSHA PEL for general industry (these workers used air-purifying respirators).

The bulk and surface sampling results indicated that ingestion was a potential route of lead exposure for all the workers. Paint fines, chips, and dust collected in the dust collection system; and all of the surfaces sampled inside the containment structure were contaminated with lead. Workers hands and clothing may have become contaminated with lead during and after abrasive blasting activities; including during take-down, moving, and set-up of the containment structure, or by touching equipment, respirators, or other surfaces. The range for lead on interior surfaces of the primary containment structure was 2400 to 9700 $\mu g/ft^2$. However, it appeared that the potential hazard of lead ingestion was controlled adequately by the painting contractor's provision of personal hygiene facilities,

and enforcement of good personal hygiene practices. For example, workers were provided with separate clean and dirty changing areas with storage lockers, showers and a handwashing facility with hot and cold running water, and disposable protective clothing. Eating, drinking, and smoking were not allowed in the work area, or outside the work area prior to handwashing. Workers took lunch breaks off site, after washing and changing clothes. Results indicated that in the trailer used for decontamination, lead contamination on the "clean" side was relatively low.

In summary, the worker protection program at this job appeared to effectively control worker exposures to lead. BLLs measured for each of the six workers on-site during the NIOSH survey, about six weeks after work began on-site, were less than the pre-job BLLs. All of the workers were previously occupationally exposed to lead during repainting of steel structures.

The use of a total containment structure provided with an exhaust ventilation/dust collection system reduced airborne lead levels outside containment to low levels. Lead was not detected in area air samples collected around the tank during abrasive blasting (minimum detectable concentrations: <4 to <6 $\mu g/m^3$, based on sample volumes). Personal exposures among workers outside containment during abrasive blasting operations were below, but approached, the OSHA PEL for general industry (highest: 47 $\mu g/m^3$). It is likely that the personal lead exposures outside containment were increased due to exposures associated with operation and maintenance of the dust collection equipment.

The comprehensive approach to worker protection utilized at this site demonstrated that compliance with the OSHA general industry lead standard (29 CFR 1910.1025) in the construction industry is technically feasible and protective to workers.

VIII. RECOMMENDATIONS

1. The use of a comprehensive worker protection program for repainting steel structures coated with lead-containing paint should be continued. A successful program, such as the one used at this site, entails the use of engineering controls, good work practices, worker training, personal protective equipment, personal hygiene facilities and practices, and medical surveillance.

IX. REFERENCES

1. SSPC [1989]. Visual standard for abrasive blast cleaned steel, SSPC VIS1-89. Pittsburgh, PA: Steel Structures Painting Council, Publication No. 89-05.

2. NIOSH [1984]. NIOSH manual of analytical methods, 3rd edition, vol. 1 and 2, with 1985, 1987 and 1989 supplements. Eller, P., Editor. Cincinnati, OH: U.S. Department of Health and Human Services, Public Health Service, Centers for Disease Control, National Institute for Occupational Safety and Health, DHHS (NIOSH) Publication No. 84-100.

3. HUD [1990]. Lead-based paint: interim guidelines for hazard identification and abatement in public and Indian housing. Washington, DC: U.S. Department of Housing and Urban Development, Office of Public and Indian Housing, September 1990.

4. NIOSH [1992]. Lead in surface wipe samples, Method (Draft) 0700, issued March 2, 1992 as addendum to the NIOSH manual of analytical methods, 3rd edition, vol. 1 and 2, with 1985, 1987 and 1989 supplements. Eller, P., Editor. Cincinnati, OH: U.S. Department of Health and Human Services, Public Health Service, Centers for Disease Control, National Institute for Occupational Safety and Health.

5. CDC [1988]. NIOSH recommendations for occupational safety and health standards 1988. MMWR 37(S-7): 1-29 (1988).

6. ACGIH [1991]. Threshold limit values and biological exposure indices for 1991-1992. Cincinnati, OH: American Conference of Governmental Industrial Hygienists.

7. Code of Federal Regulations [1989]. Air contaminants-permissible exposure limits. Title 29 Code of Federal Regulations, 29 CFR Part 1910.1000, OSHA 3112, Washington, DC: U.S. Government Printing Office, Federal Register.

8. NIOSH [1981]. Occupational health guidelines for chemical hazards. Cincinnati, OH: U.S. Department of Health and Human Services, Public Health Service, Centers for Disease Control, National Institute for

Occupational Safety and Health, DHHS (NIOSH) Publication No. 81-123, and supplements 88-118, 89-104.

9. Hernberg S, et al [1988]. Lead and its compounds. In: Occupational medicine. 2nd ed. Chicago, IL: Year Book Medical Publishers.

10. Landrigan PJ, et al [1985]. Body lead burden: summary of epidemiological data on its relation to environmental sources and toxic effects. In: Dietary and environmental lead: human health effects. Amsterdam: Elsevier Science Publishers.

11. Proctor NH, Hughes JP, Fischman ML [1988]. Lead. In: Chemical hazards of the workplace. 2nd ed. Philadelphia, PA: J.B. Lippincott Company, Philadelphia, pp. 294-298.

12. WHO [1980]. Recommended health-based limits in occupational exposure to heavy metals. World Health Organization. Geneva: Technical Report Series 647.

13. Muhaffey K, Annest J, Roberts J, Murphy R [1982]. National estimates of blood lead levels. United States, 1976-1980. New Engl J Med 307:373-9.

14. Annest J, Dirkle J, Makuc C, Nesse J, Bayse D, Kovar M [1983]. Chronological trends in blood lead levels between 1976 and 1980. New Engl J Med 308:1373-7.

15. CDC [1991]. Strategic plan for the elimination of childhood lead poisoning. U.S. Department of Health and Human Services, Public Health Service, Centers for Disease Control.

16. NIOSH [1978]. Occupational exposure to inorganic lead. Cincinnati, OH: U.S. Department of Health, Education, and Welfare, Public Health Service, Centers for Disease Control, National Institute for Occupational Safety and Health, DHEW (NIOSH) Publication No. 78-158.

17. Code of Federal Regulations [1989]. OSHA lead standard. 29 CFR, Part 1910.1025. Washington, DC: U.S. Government Printing Office, Federal Register.

18. ATSDR [1990]. Toxicological profile for lead. Atlanta, GA: U.S. Department of Health and Human Services, Public Health Service, Agency

for Toxic Substances and Disease Registry, DHHS (ATSDR) Publication No. TP-88/17.

19. DHHS [1990]. Healthy people 2000: national health promotion and disease objectives. Washington, DC: U.S. Department of Health and Human Services, Public Health Service, DHHS (PHS) Publication No. 91-50212.

20. Grandjean, P and Bach, E [1986]. Indirect exposures: the significance of bystanders at work and at home. Am Ind Hyg Assoc J 47(12):819-824.

21. OSHA and NIOSH [1991]. Working with lead in the construction industry. Washington, DC: U.S. Department of Labor, Occupational Safety and Health Administration, and U.S. Department of Health and Human Services, National Institute for Occupational Safety and Health. OSHA Publication No. 3126.

22. NIOSH [1991]. NIOSH alert-request for assistance in preventing lead poisoning in construction workers. Cincinnati, OH: U.S. Department of Health and Human Services, Public Health Service, Centers for Disease Control, National Institute for Occupational Safety and Health, DHHS (NIOSH) Publication No. 91-116.

23. HUD [1990]. Lead-based paint: interim guidelines for hazard identification and abatement in public and Indian housing. Washington, DC: U.S. Department of Housing and Urban Development, Office of Public and Indian Housing, September 1990.

24. EPA [1989]. Memorandum, OSWER Directive #9355.4-02, Interim guidance on establishing oil lead cleanup levels at superfund sites. Office of Solid Waste and Emergency Response, United States Environmental Protection Agency, September 7, 1989.

25. MPCA [1991]. Lead abatement in soil. Minnesota Rules, chapter 4760, parts 4760.0010-4760.0050. St. Paul, MN: Minnesota Pollution Control Agency, Hazardous Waste Division, Rules Unit.

26. Code of Federal Regulations. OSHA. 40 CFR 260. Washington, DC: U.S. Government Printing Office, Office of the Federal Register.

X. AUTHORSHIP AND ACKNOWLEDGEMENTS

Report Prepared by:

Aaron Sussell, M.P.H.
Industrial Hygienist
Hazard Evaluations and Technical Assistance Branch

R. Leroy Mickelsen, M.S.
Industrial Hygienist
Engineering Controls and Technology Branch

Carol Rubin, D.V.M., M.P.H.
Medical Investigator
Surveillance Branch

Eugene Freund, M.D., M.S.P.H
Medical Investigator
Surveillance Branch

Originating Office:

Hazard Evaluations and Technical Assistance Branch
Division of Surveillance, Hazard Evaluations and Field Studies

Report Typed by:

Ellen E. Blythe
Office Automation Assistant

XI. DISTRIBUTION AND AVAILABILITY OF REPORT

Copies of this report may be freely reproduced and are not copyrighted. Single copies of this report will be available for a period of 90 days from the date of this report from the NIOSH Publications Office, 4676 Columbia Parkway, Cincinnati, Ohio 45226. To expedite your request, include a self-addressed mailing label along with your written request. After this time, copies may be purchased from the National Technical Information Service (NITS), 5825 Port Royal Road, Springfield, Virginia 22161. Information regarding the NITS stock number may be obtained from the NIOSH Publications Office at the Cincinnati address.

Copies of this report have been sent to:

1. Datanet Engineering, Inc.
2. Anne Arundel County Department of Utilities, Maryland
3. Seaway Painting, Inc.
4. Harrison Industrial Technologies, Inc.
5. OSHA Region III
6. NIOSH Region Office, Boston
7. Maryland Division of Labor and Industry

For the purpose of informing affected employees, copies of this report shall be posted by the employer in a prominent place accessible to the employees for a period of 30 calendar days.

Table 1

Bulk Material Sampling for Lead
May 8, and 30, 1991
Seaway Painting, Inc.
Old Mill Tank

HETA 91-209

Sample Location	**Date**	**Lead (ppm by wt.)**
Paint fines in grit classifier	5/8/91	1300
Paint chips in grit classifier	5/8/91	3200
Recycled abrasive - before cleaning	5/8/91	130
Recycled abrasive-after cleaning	5/8/91	13
Dust in dust collector	5/8/91	2500
Soil near work table outside office	5/30/91	190
Soil in public park 100 yards from tank	5/30/91	(10)
Used grit collected from tarp below tank	5/30/91	28
EPA criteria-soils		500
CPSC criteria for lead-based paint		600

( ) Value approximate, quantity detected as between LOD and LOQ

Table 2

Surface Sampling for Lead
May 29, 1991
Seaway Painting, Inc.
Old Mill Tank

HETA 91-209

Sample Location[1]	Lead µg/sample	Lead µg/ft²
Outside containment		
Work table near decon trailer	420	420
Spigot of 5 gal water jug near decon trailer[2]	38	---
Locker door in trailer, "clean" side[3]	31	34
Floor in decon trailer, "clean" side	130	130
Floor in decon trailer, " dirty" side	610	610
Inside containment structure		
Polyethylene tarp wall	2400	2400
Polyethlene tarp wall	9700	9700
Rigid plastic wall	2600	2600
Area A--rigid wall of exhaust plenum [4]	3600	3600
Area B--rigid wall of exhaust plenum[4]	4400	4400
Area B--1st repeat wipe	1100	1100
Area B--2nd repeat wipe	860	860
Area C--rigid wall of exhaust plenum[4]	3500	3500
Area C--1st repeat wipe	960	960
Area C--2nd repeat wipe	940	940
HUD criteria - floor surfaces		200
HUD criteria - wall surfaces		500

Notes:

[1] Surface areas sampled were 12"x12" unless otherwise noted.
[2] Area sampled was not determined.
[3] Area sampled was 9.5"x14".
[4] A, B, and C were adjacent areas.

Table 3

PBZ and Area Air Sampling for lead
May 29-30, and June 6, 1991
Seaway Painting, Inc.
Old Mill Tank

HETA 91-209

Job Title or Location	Sampling Times Begin	Sampling Times End	Time (min)	Lead TWA[1] ($\mu g/m^3$)
Moving Containment Structure: 5/29/91 [2]				
Blaster 1*	07:37	17:14	490	ND<4
Blaster 2*	07:22	17:00	462	35
Blaster 3*	07:20	17:03	452	31
Equipment operator*	07:18	16:12	444	(9)
Foreman*	07:26	15:10	304	ND<7
Groundsman*	08:05	17:19	438	(4)
AREA--Column on W. side of tank	07:52	17:17	565	ND<2
AREA--table outside of office	07:29	17:10	581	ND<2
Abrasive Blasting Operations: 5/30/91 [2]				
Blaster 1-dust blowdown	09:08	09:38	30	470
Blaster 1-inside helmet	09:42	11:50	128	(16)
Blaster 1-outside helmet	09:42	09:53F	11	(360)
Blaster 3-inside helmet	06:56	10:20F	204	(25)
Foreman	07:32	12:03	271	39
Groundsman	10:05	12:26	141	ND<14
Groundsman	07:13	12:20	307	47
AREA--table outside of office	07:03	12:25	322	ND<4
AREA--Column on W. side of tank	07:04	11:59F	295	ND<5
AREA--Perimeter fence on E. side of tank	08:34	12:23	229	ND<6
Abrasive Blasting Operations: 6/6/91 [3]				
AREA--20' below blaster in containment	12:27	12:32	5	3000
AREA--30' above blaster in containment	12:43	12:50	7	620
AREA--adjacent to blaster in containment	11:42	11:47	5	1900
AREA--adjacent to blaster in containment	11:51	11:56	5	1600
OSHA PEL				50
NIOSH REL				<100
ACGIH TLV				150

Notes:

[1] TWA for period sampled (sample time may be < 8 hr).

[2] Analysis by NIOSH Method 7082, LOD 4 μg/sample.

[3] Analysis by NIOSH Method 7105, LOD 0.05 μg/sample; samples collected by Datanet Engineering.

* Sampling was not continuous due to pump faults, or off site breaks.

ND Not detected, less than value based on sample volume and LOD.

( ) Value approximate; quantity detected was between LOD and LOQ.

F Sampling period ended at pump fault.

Seaway Painting, Inc.
Old Mill Tank, HETA 91-209

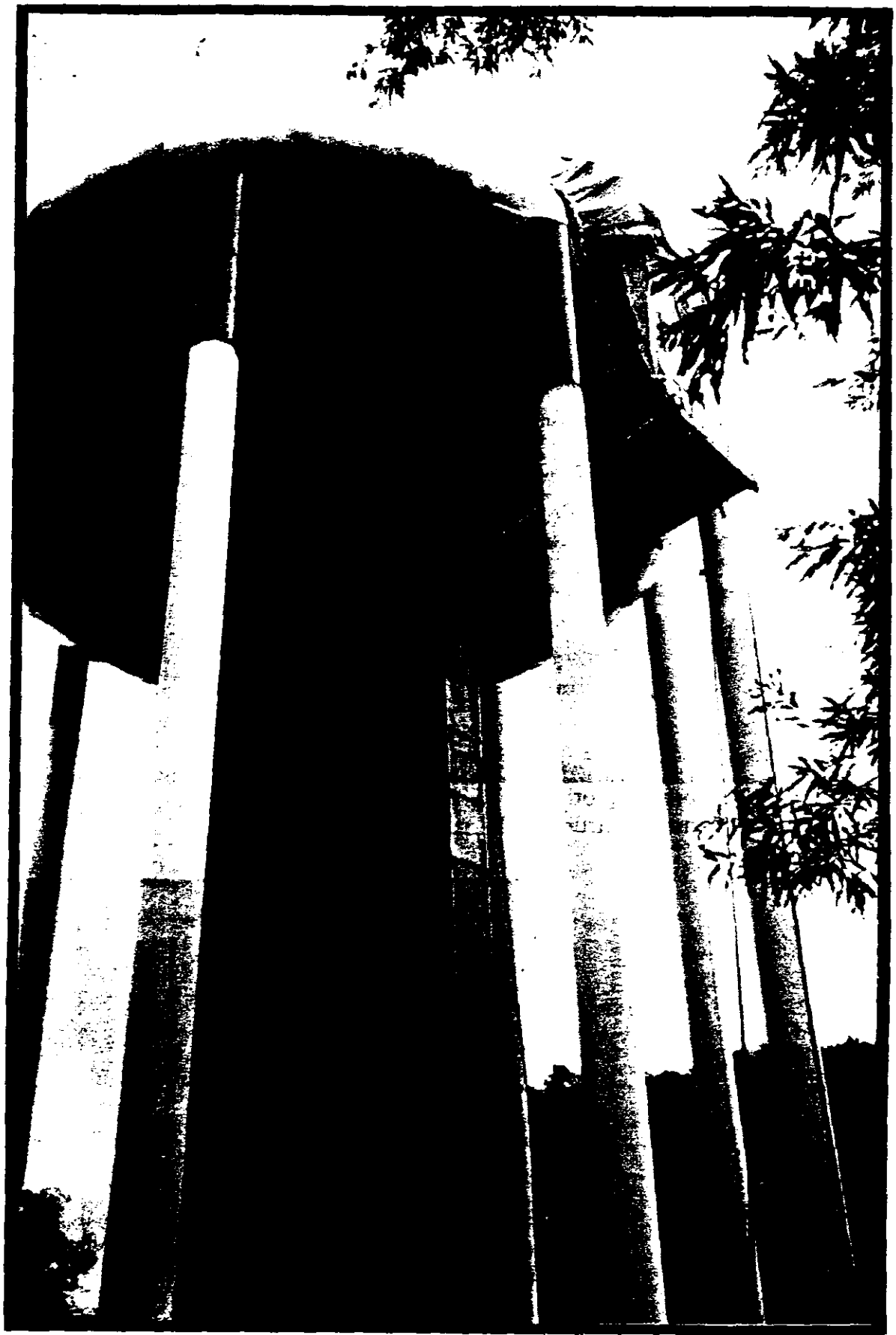

Figure1. Primary containment structure used for abrasive blasting.

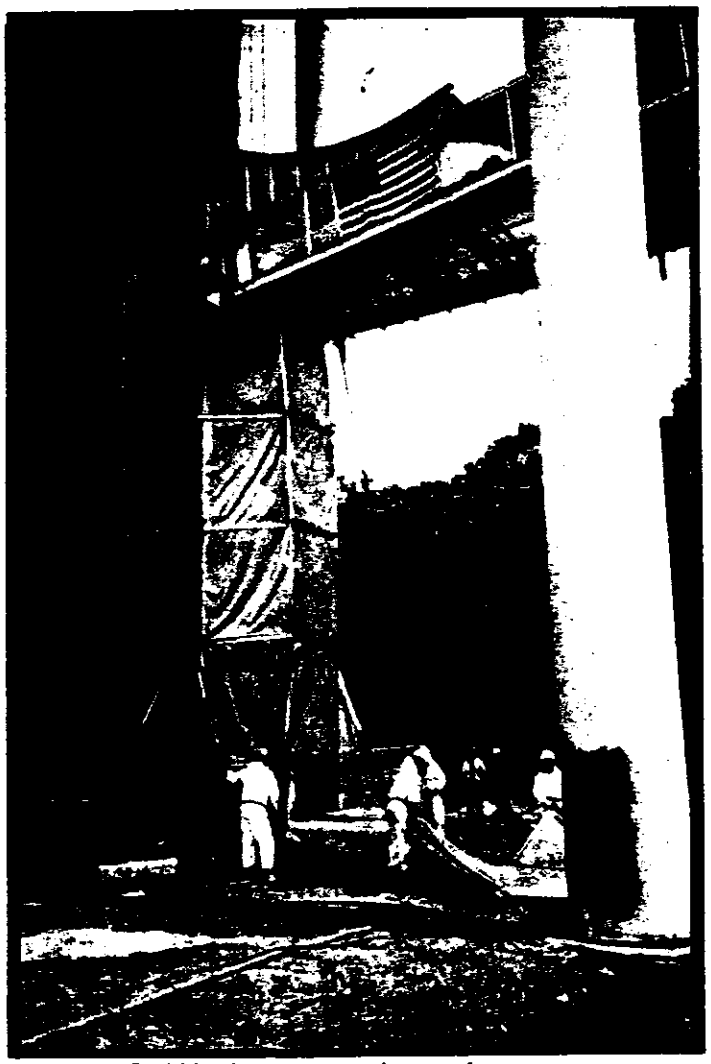

Figure 2. Workers erecting primary containment structure.

Figure 3. Portable exhaust plenum and 18-inch diameter flexible exhaust ducts.

Figure 4

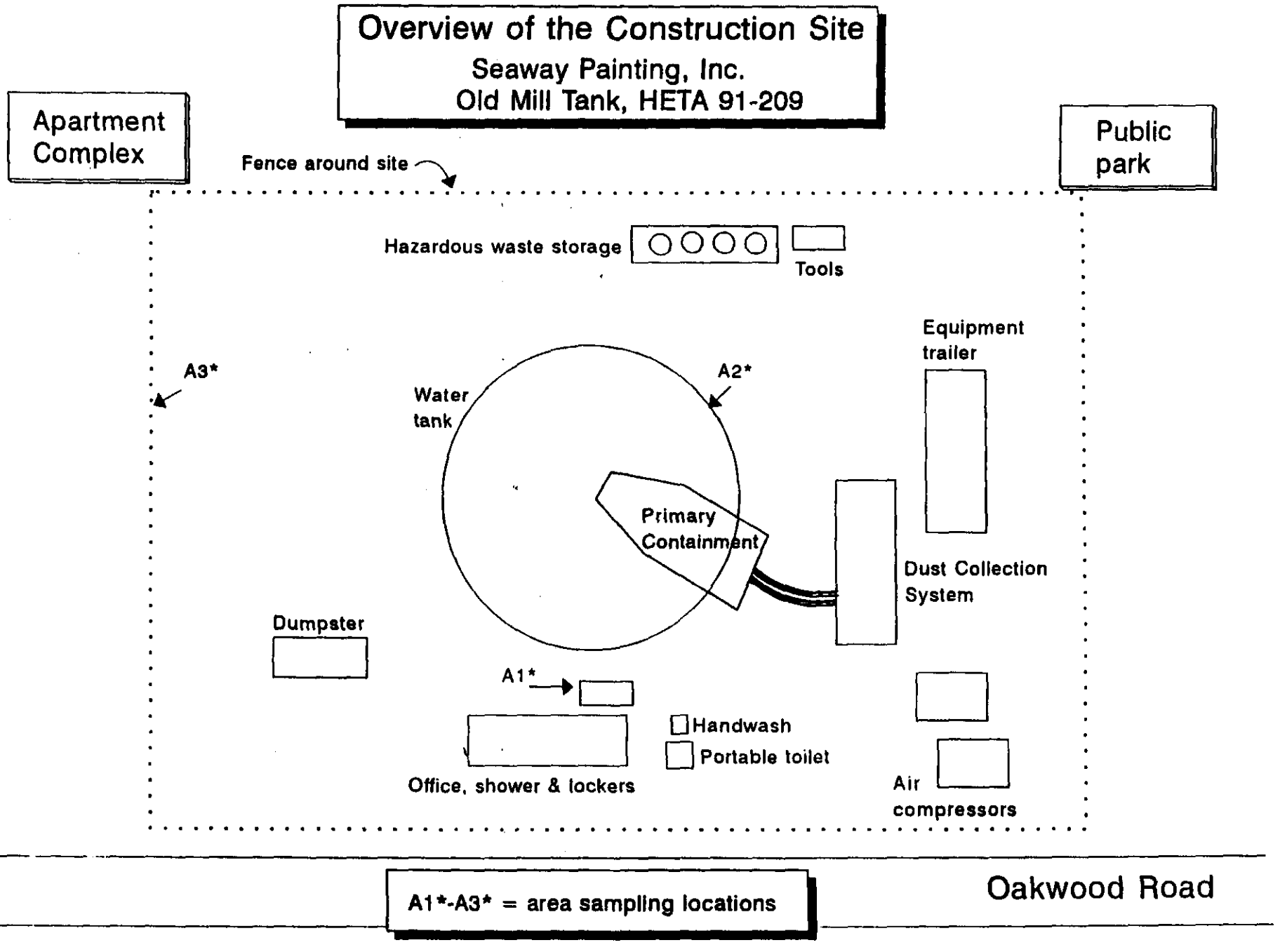
Overview of the Construction Site
Seaway Painting, Inc.
Old Mill Tank, HETA 91-209
Apartment Complex
Public park
Fence around site
Hazardous waste storage
Tools
Equipment trailer
A3*
A2*
Water tank
Primary Containment
Dust Collection System
Dumpster
A1*
Handwash
Portable toilet
Office, shower & lockers
Air compressors
A1*-A3* = area sampling locations
Oakwood Road

Figure 5

Ventilation Assesment for Primary Containment
Seaway Painting
Old Mill Tank, HETA 91-209

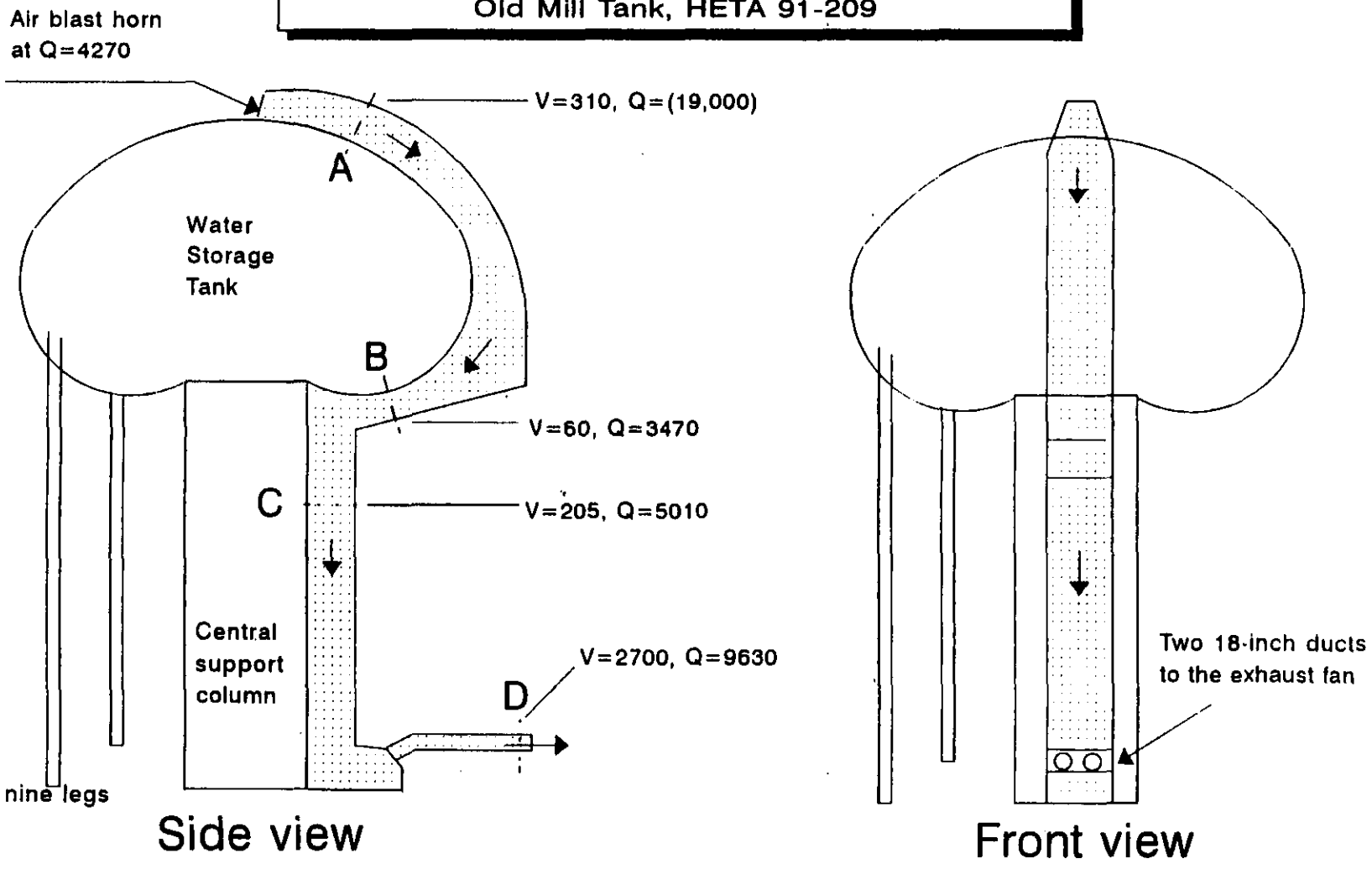

V feet per minute
Q cubic feet per minute
( ) value suspect due to turbulence
→ direction of air flow
A-D measurement locations