This Health Hazard Evaluation (HHE) report and any recommendations made herein are for the specific facility evaluated and may not be universally applicable. Any recommendations made are not to be considered as final statements of NIOSH policy or of any agency or individual involved. Additional HHE reports are available at http://www.cdc.gov/niosh/hhe/reports

HETA 90-0246-2314
MAY 1993
AMERICAN FUEL CELL AND COATED FABRICS COMPANY
MAGNOLIA, ARKANSAS

NIOSH INVESTIGATORS:
GREGORY A. BURR, C.I.H.
YVONNE BOUDREAU, MD
KATHARYN A. GRANT, Ph.D.
DANIEL HABES, M.S.E
MATTHEW K. KLEIN, P.E.

SUMMARY

A request was submitted by the United Rubber Workers (URW) for a National Institute for Occupational Safety and Health (NIOSH) Health Hazard Evaluation (HHE) at the American Fuel Cell and Coated Fabrics Company (Amfuel) plant in Magnolia, Arkansas. Health effects, including "neurotoxic responses, nausea, dermatitis, multiple cancers, narcosis, emotional stress, heat stress, and ergonomic problems," were reported by the union to be occurring among Amfuel workers during the manufacture of coated rubber aircraft fuel cells. An initial survey was conducted on November 14-16, 1990, following the completion of an Occupational Safety and Health Administration (OSHA) safety and health compliance inspection. Two follow-up surveys were conducted by NIOSH investigators in July and August 1991, to measure solvent levels, evaluate heat stress conditions, conduct an ergonomic evaluation, and assess the adequacy of existing ventilation systems.

Ergonomic assessments were performed in the *Fittings, Innerliner, Outerply, Final Inspection, Nylon Spray, and Onion Tank Assembly* areas. A job analysis was performed to assess the repetitiveness of various fuel cell assembly tasks and to document instances of awkward hand, wrist, arm and trunk postures. Manual force requirements were estimated, and exposures to hand/arm vibration were also noted. Medical interviews were conducted and injury and illness records were reviewed.

Personal breathing-zone (PBZ) and general area (GA) air samples were collected for methyl ethyl ketone (MEK) and 1,1,1-trichloroethane, the principal solvents used in assembling and cleaning fuel cells. Concentrations of MEK in the PBZ samples ranged from <10 parts per million (ppm) to 421 ppm, expressed as time-weighted averages (TWAs) over the sampling period. Three of four short-term (15 minutes) PBZ air samples collected for MEK during a ring cleaning operation in the Fittings Department had concentrations which exceeded the NIOSH Short-term Exposure Limit (STEL) of 300 ppm.

Concentrations of 1,1,1-trichloroethane in five short-term (15 to 19 minutes) PBZ air samples collected during the interior cleaning of fuel cells in the Final Finish Department ranged from 293 to 878 ppm. Four of these PBZ air samples had 1,1,1-trichloroethane concentrations which exceeded the NIOSH STEL of 350 ppm. Results from all the PBZ and GA air samples collected for 1,1,1-trichloroethane ranged from <10 ppm to 878 ppm, TWA over the sampling period.

Injury and illness records contained on OSHA injury and illness forms were reviewed for information pertinent to the HHE request. Private medical interviews were conducted with 26 current employees who volunteered to talk about their work-related health concerns. Union representatives provided NIOSH with a list of 30 other current or former employees with work-related health concerns. The most commonly reported health concern was skin rashes. This was attributed by affected employees to "shiny" gum material used in the Innerliner area. The skin rashes were also reported to be worse during the warmer summer months. Those who reported skin rashes also reported that the use of gloves or wearing long sleeves was impractical because it did not allow them to do their job properly. One person interviewed had what she considered a work-related skin rash on an exposed area of her forearm which consisted of several macular red pinpoint-sized areas.

Reported colon and breast cancers occurred in fewer people than would be expected in the general population. There were eight other reported cases of "cancer," but these were not verified by available records and the affected individuals were not available for interview. Other reported health concerns included dizziness, headaches, asthma, eye, nose and throat irritation, sinus congestion, nausea, nervousness, lung disease, thyroid disease, and carpal tunnel syndrome.

The ergonomic recommendations offered in this report include replacing manual cutting shears with powered shears; providing a fixture or tool to remove scrap rubber from the hole-cutting die; re-designing scissors with longer handles, shorter blades, and a self-opening mechanism to reduce the manual stress associated with prolonged and repetitive tool use; changing the height of the work stations to reduce the occurrence of awkward wrist postures and long reaches; providing stools, cushioned floor mats, or raised foot rests; providing additional lighting and (where needed) magnifying glasses to improve visibility; adding rollers to the bottom surface of platforms and racks to allow the operator to transfer molds between surfaces with less force exertion; reducing tool vibration; and modifying tool handles to eliminate conditions which require a pinch grip.

In general, local exhaust ventilation systems were either absent or only partially effective. The company's personal protection program was not effective, evidenced by improper wearing of respirators by employees and the lack of suitable skin protection while handling solvents. The company lacked a confined space entry program and their written respiratory protection program was inadequate. A review of the company's injury and illness records revealed several departments with ergonomic problems such as cumulative trauma disorder (CTD). Specific recommendations for modifying tools, work stations, and work methods were presented to the company.

NIOSH investigators have concluded that multiple health hazards exist at this facility, including overexposures to 1,1,1-trichloroethane and methyl ethyl ketone, an inadequate confined space entry program, numerous ergonomic hazards, and inadequate personal protection. In addition, the NIOSH investigators conclude that both mechanical and chemical trauma to the skin could occur among workers handling organic solvents, rubber adhesives, and rubber stock. Both specific and generalized recommendations have been included in this report to reduce solvent exposures and improve local exhaust ventilation. Recommendations are also included which address ergonomic problems, respirator selection, personal protection, and implementation of a heat stress program.

Keywords: SIC 3069 (Fabricated Rubber Products, Not Elsewhere Classified), methyl ethyl ketone, 1,1,1-trichloroethane, heat stress, ergonomics, confined spaces, respiratory protection, ventilation, personal protective equipment, skin rash, cancer.

INTRODUCTION

A request for a National Institute for Occupational Safety and Health (NIOSH) Health Hazard Evaluation (HHE) was submitted by a representative of the United Rubber Workers's (URW) union concerning chemical exposures, heat stress, and ergonomic problems, occurring during the manufacture of coated rubber fuel cells by workers at the American Fuel Cell and Coated Fabrics Company (Amfuel) in Magnolia, Arkansas. Health effects noted in the request included "neurotoxic responses, nausea, dermatitis, multiple cancers, narcosis, emotional and heat stress, ergonomic problems, and pulmonary hemorrhage." An initial survey was conducted by NIOSH investigators on November 14-16, 1990, following the completion of an extensive Occupation Safety and Health Administration (OSHA) safety and health compliance inspection. Two follow-up surveys were conducted by NIOSH investigators in July and August 1991 to measure solvent exposures and evaluate heat stress conditions and the adequacy of existing ventilation systems throughout the facility. In addition, an ergonomic evaluation was conducted in the following departments: *Fittings; Innerliner (including rubber cutting); Outerply; Nylon Spray; Final Inspection; and Onion Tank Assembly*.

Prior to this NIOSH survey, an OSHA heath and safety compliance investigation was conducted at Amfuel between July to September, 1990. Health and safety related citations resulting from this survey were received by the company on November 16, 1990. The OSHA citations initially issued to Amfuel involved an inadequate hazard communication program, inadequate personal protective equipment, and documentation of numerous employee overexposures to methyl ethyl ketone (MEK); methyl chloroform (1,1,1-trichloroethane); methyl isobutyl ketone; lead; morpholine; and carbon disulfide.

BACKGROUND

Formerly owned and operated by the Firestone Tire and Rubber Company, the facility became the American Fuel Cell and Coated Fabrics Company in 1983. The majority of Amfuel employees work producing aircraft fuel cells at one of two plants located in Magnolia. Other production activities (unrelated to fuel cell production) performed at the second Magnolia facility include contract maintenance work on Titan missile components and Mark IV army rocket casings. A smaller plant, located in Monticello, Arkansas, produces transportable 2000 gallon water storage tanks (termed "onion tanks" because of their unique shape when filled with water). The total workforce of all the Amfuel plants was approximately 600 people at the time of this evaluation.

The primary Amfuel products, and the focus of this evaluation, are fuel bladders (also called fuel cells), which are used in military and small commercial aircraft. To maximize fuel storage capacity, these cells typically conform to the shape of the particular aircraft in which they are used. As a result, the shape of the fuel cells may be complex. The assembly time of a single fuel cell may take more than a month due to the manual assembly steps required to produce a final product. The capacity of the fuel cells produced by Amfuel range from several hundred to several thousand gallons. Table 1 lists the departments which were included in this NIOSH evaluation and the type of assessments performed in each area.

The manufacture of fuel cells for aircraft is a labor intensive process which involves the assembly, by hand, of thin layers of material (either fabric or rubber) over mandrels. Mandrels are precision forms which replicate the shape of the fuel cell being produced. Produced off-site by another company, these forms are constructed from paper maché, cardboard, and plaster. Each mandrel is used only once.

Table 1 - NIOSH EVALUATION

Department	Survey Assessments Performed
Rubber Cutting	Ergonomic
Innerliner	Ergonomic, Solvent Exposures
Outerply	Ergonomic, Solvent Exposures
Fittings	Ergonomic, Heat Stress
Cement "House"	Solvent Exposures
Face Coating	Ergonomic, Solvent Exposures, Heat Stress
Heat Treating	Heat Stress
Cement Spray	Solvent Exposures
Nylon Spray	Solvent Exposures
Final Finish	Ergonomic, Solvent Exposures, Heat Stress, Confined Spaces
Onion Tank Assembly	Ergonomic

Large sheets of stock rubber and coated fabric are cut to their desired shape in the *Rubber Cutting* department. The build-up of the multiple layers of rubber and fabric occurs in either the *Innerliner* or *Outerply* Departments. The layers of rubber and fabric are assembled using adhesives (referred to as "cements" by Amfuel workers) which contain solvents (primarily methyl ethyl ketone [MEK]) and additives (such as carbon black). The adhesives are manually applied by brush or roller to the hand-held sheets of material. Metal fittings, loops, and other specialty connections may be attached to the cells in these departments.[a] Nylon and latex coatings are sprayed on the cells during various stages of production.

Following the *Innerliner* and *Outerply* Departments, the assembled fuel cells are autoclaved (a rubber curing process similar to vulcanization). Prior to autoclaving, the cardboard mandrel is softened by soaking the fuel cell in a large tank of heated water and then removed. Following autoclaving, all of the fuel cells, as part of a strict quality control program, are leak tested by inflating them with air to identify any structural defects. In addition, depending on the military specifications required for a particular fuel cell, additional leak checks, using jet fuel, may be performed.

The last stage prior to shipping is the *Final Finish* Department where all the cells receive a final inspection, repair (if needed), and final cleaning of both interior and exterior surfaces. Typically one or two inspectors (depending on the size of the fuel cell) inspect and clean a cell. Cleaning solvents used in this department include MEK (for the exterior surfaces) and 1,1,1-trichloroethane (for the interior portions of the cell). Since the fuel cells have little structural rigidity to them once the mandrel is removed, the workers suspend the cells from elevated work tables using rigging consisting of small ropes attached from overhead metal bars to loops on the exterior surface of the fuel cell. This arrangement allows the workers to inspect both the exterior

---

[a] The employees located in the adjacent *Fittings* Department prepare sub-assemblies consisting of metal hardware (rings, bolts, etc.) which are bonded to rubber collars. These sub-assemblies are then shipped to the *Innerliner* Department for attachment to the appropriate fuel cell.

and interior surfaces. Depending on the size of the cell, the employees may be required to work completely inside the cell.

EVALUATION CRITERIA

GENERAL

As a guide to the evaluation of the hazards posed by workplace exposures, NIOSH field staff employ environmental evaluation criteria for the assessment of a number of chemical and physical agents. These criteria are intended to suggest limits of exposure to which most workers may be exposed up to 10 hours per day, 40 hours per week for a working lifetime without experiencing adverse health effects. It is, however, important to note that not all workers will be protected from adverse health effects even though their exposures are maintained below these limits. A small percentage may experience adverse health effects because of individual susceptibility, a pre-existing medical condition, and/or a hypersensitivity (allergy). In addition, some hazardous substances may act in combination with other workplace exposures, the general environment, or with medications or personal habits of the worker to produce health effects even if the occupational exposures are controlled at the limit set by the criterion. These combined effects are often not considered in the evaluation criteria. Also, some substances are absorbed by direct contact with the skin and mucous membranes, and thus potentially increase the overall exposure. Finally, evaluation criteria may change over the years as new information on the toxic effects of an agent become available.

The primary sources of environmental evaluation criteria for the workplace are the following: 1) NIOSH Recommended Exposure Limits (RELs),[1] 2) the American Conference of Governmental Industrial Hygienists' (ACGIH) Threshold Limit Values (TLVs),[2] and 3) the U.S. Department of Labor, Occupational Safety and Health Administration (OSHA) Permissible Exposure Limits (PELs).[3] The OSHA PELs may be required to take into account the feasibility of controlling exposures in various industries where the agents are used; the NIOSH RELs, by contrast, are based primarily on concerns relating to the prevention of occupational disease. In evaluating the exposure concentrations and the recommendations for reducing these concentrations found in this report, it should be noted that the lowest exposure criteria was used; however, industry is legally required to meet those limits specified by the OSHA standard.

A time-weighted average (TWA) exposure refers to the average airborne concentration of a substance during a normal 8- to 10-hour workday. Some substances have recommended short-term exposure limits (STELs) or ceiling values which are intended to supplement the TWA where there are recognized toxic effects from high short-term exposures.

METHYL CHLOROFORM, METHYL ETHYL KETONE, ETHANOL

Table 2 summarizes toxicity and permissible exposure information on methyl chloroform, MEK, and ethanol. Chloroprene, although listed as an ingredient in the latex spraying operation, was not detected in any of the personal breathing-zone air samples collected for this material. As a result, no toxicity and exposure data has been included for this chemical.

ERGONOMICS

Cumulative trauma disorder (CTD) of the musculoskeletal system is an umbrella term which describes a number of injuries affecting the tendons, tendon sheaths, muscles, and nerves of the upper extremities. Common CTDs include tendinitis, synovitis, tenosynovitis, bursitis, ganglionic cysts, strains, DeQuervain's disease, and carpal tunnel syndrome (CTS).

In recent years, the link between CTDs and occupation has gained increasing attention. In 1990, CTDs were responsible for more than half of all occupational illnesses reported to the Bureau of Labor Statistics.[4] Studies have shown that CTDs can be precipitated or aggravated by activities that require repeated or stereotyped movements, large applications of force in awkward postures, or exposure to hand/arm vibration.[5-7] Postures often associated with upper extremity (UE) CTDs are extension, flexion, and ulnar and radial deviation of the wrist, open-hand pinching, twisting movements of the wrist and elbow, and reaching over shoulder height. Activities associated with UE CTDs are frequently observed in many manufacturing and assembly jobs in industry. Occupations associated with a high incidence of CTDs include electronic components assembly,

HEAT STRESS

Table 3 Heat Stress Criteria

1. Unacclimatized or physically unconditioned - subtract 4°F (2°C) from the permissible WBGT value for acclimatized workers.
2. Increased air velocity (above 1.5 meters per second or 300 feet per minute) - add 4°F (2°C). This adjustment can not be used for air temperatures in excess of 90-95°F (32-35°C). This correction does not apply if impervious clothing is worn.
3. Impervious clothing which interferes with evaporation:
   a. Body armor, impermeable jackets - subtract 4°F (2°C)
   b. Raincoats, turnout coats, full-length coats - subtract 7°F (4°C).
   c. Fully encapsulated suits - subtract 9°F (5°C).
4. Obese or elderly - subtract 2-4°F (1-2°C).
5. Female - subtract 1.8°F (1°C). This adjustment, which is based on a supposedly lower sweat rate for females, is questionable since the thermoregulatory differences between the sexes in groups that normally work in hot environments are complex.[17] Seasonal and work rate considerations enter into determining which sex is better adapted to work in hot environments.[18]

There are a number of heat stress guidelines that are available to protect against heat-related illnesses. These include, but are not limited to, the wet bulb globe temperature (WBGT), Belding-Hatch heat stress index (HSI), and effective temperature (ET).[11-13] The underlying objective of these guidelines is to prevent a worker's core body temperature from rising excessively. Many of the available heat stress guidelines, including those proposed by NIOSH and the ACGIH, use a maximum core body temperature of 38ºC as the basis for the environmental criterion.[14,15]

Wet Bulb Globe Temperature (WBGT) Index

Both NIOSH and ACGIH recommend the use of the WBGT index to measure environmental factors because of its simplicity and suitability in regards to heat stress. The WBGT index takes into account environmental conditions such as air velocity, vapor pressure due to atmospheric water vapor (humidity), radiant heat, and air temperature, and is expressed in terms of degrees Fahrenheit (or degrees Celsius). Measurement of WBGT is accomplished using an ordinary dry bulb temperature (DB), a natural (unaspirated) wet bulb temperature (WB), and a black globe temperature (GT) as follows:

$$WBGT_{in} = 0.7\ (WB) + 0.3\ (GT)$$

for inside or outside without solar load,

OR

$$WBGT_{out} = 0.7\ (WB) + 0.2\ (GT) + 0.1\ (DB)$$

for outside with solar load.

Originally, NIOSH defined excessively hot environmental conditions as any combination of air temperature, humidity, radiation, and air velocity that produced an average WBGT of 79ºF (26ºC) for unprotected workers.[16] However, in the revised criteria for occupational exposure to hot environments, NIOSH provides diagrams (see Figure 1) showing work-rest cycles and metabolic heat versus WBGT exposures which should not be exceeded.[14]

Similarly, ACGIH recommends TLVs® for environmental heat exposure permissible for different work-rest regimens and work loads.[15] The NIOSH REL and ACGIH TLV criteria assume that the workers are heat acclimatized, are fully clothed in summer-weight clothing, are physically fit, have good nutrition, and have adequate salt and water intake. Additionally, they should not have a pre-existing medical condition that may impair the body's thermoregulatory mechanisms. For example, alcohol use and certain therapeutic and social drugs may interfere with the body's ability to tolerate heat. Modifications of the NIOSH and ACGIH evaluation criteria should be made if the worker or conditions do not meet the previously defined assumptions. Modifications which have been suggested are shown in Table 3.

Selection of a protective NIOSH WBGT exposure limit from Figure 1 is contingent upon identifying the appropriate work-rest schedule and the metabolic heat produced by the work. The work-rest schedule is characterized by estimating the amount of time the employees work to the nearest 25%. The most accurate assessment of metabolic heat production is to actually measure it via calorimetry. However, this is impractical in industrial work settings. An estimate of the metabolic heat load can be accomplished by dividing the work activity into component tasks and adding the time-weighted energy rates for each component. Because of the error associated with estimating metabolic heat, NIOSH recommends using the upper value of the energy expenditure range to allow a margin of safety. Table 4 presents the metabolic estimate for an employee working in the *Final Finish* Department as an example of this technique.[14]

Aural Temperature Measurements

As an evaluation technique, the WBGT method is at best only an imprecise indicator of the heat load experienced by a worker. Assumptions must be made regarding the worker's degree of acclimatization and physical fitness. The NIOSH heat stress REL must be adjusted for weight, clothing, work rates, and metabolic heat production. In addition, these heat stress indices may not appropriate for situations where clothing that inhibits or prevents evaporative heat loss (e.g., personal protective equipment) is worn.

Direct measurements of core body temperature typically entail unacceptably invasive techniques (rectal temperature) or require strictly controlled procedures (oral temperature). Commercially available personal heat stress monitors have been developed that are capable of monitoring workers on a continuous basis through a variety of techniques, including ear canal temperature. These monitors generally offer data logging capability, as well as alarm functions for alerting workers when pre-set limits are exceeded. During this survey NIOSH industrial hygienists conducted a limited evaluation using a personal heat stress monitor that utilized the ear-canal temperature technique. It should be noted that the accuracy and precision of this monitor has not been evaluated by NIOSH.

CONFINED SPACES

The NIOSH definition of a confined space is an area which by design has *limited* openings for entry and exit, *unfavorable natural ventilation* which could contain (or produce) dangerous air contaminants, and which is *not intended for continuous employee occupancy*.[19] The NIOSH criteria for working in confined spaces further classifies confined spaces based upon the characteristics such as oxygen level, flammability, and toxicity. As shown in Table 5, if any of the hazards present a situation which is immediately dangerous to life or health (IDLH), the confined space is designated **Class A**. A **Class B** confined space has the potential for causing injury and/or illness but is not IDLH. A **Class C** space would be one in which the hazard potential would not require any special modification of the work procedure. Table 6 lists the items which should be considered before entering any confined space.

EVALUATION DESIGN

AIR MONITORING

Personal breathing-zone (PBZ) and general area (GA) air samples were collected on August 20-21, 1991, for methyl ethyl ketone (MEK), methyl chloroform (1,1,1-trichloroethane), chloroprene, and ethanol. The methods used for collection and analysis of these materials are summarized in Table 7.

VENTILATION ASSESSMENT

A qualitative "wall to wall" ventilation assessment was performed in the fuel cell production areas. This inspection included a visual observation of existing local exhaust ventilation (LEV) controls as well as a review of work practices.

HEAT STRESS

Environmental measurements were obtained using a Reuter Stokes RSS 211D Wibget® heat stress meter manufactured by Reuter Stokes, Canada. This direct reading instrument is capable of monitoring dry bulb, natural (unaspirated) wet bulb, and black globe temperatures in the range between 32° and 200°F, with an accuracy of ± 0.5-1.0°F. This meter also computes the indoor and outdoor WBGT indices in the range between 32° and 200°F. Measurements were collected about four feet from the floor after the meter was allowed to stabilize.

In addition to the environmental heat stress measurements obtained with the Reuter Stokes Wibget®, a Quest QuesTemp°II® (Quest Electronics, Oconomowoc, WI) personal heat stress monitor was used to measure aural (ear) temperature of an employee working within a fuel cell in the *Final Finish* Department. This device electronically measures temperature in the ear canal. The difference between the ear and body temperatures is compensated for by calibrating the unit directly to the worker's oral temperature. A small sensor, which is placed in the ear canal via an earplug, monitors changes in the body's temperature and will alarm if the level exceeds a pre-set limit (factory set at 38°C, adjustable up to 39°C). The monitor also continuously logs body temperature for subsequent evaluation, such as assessing the heat stress incurred from specific tasks. The ear mold containing the plug and sensor is equipped with a second temperature sensor, which monitors the worker's environment, and a small speaker used for an audible alert. It should be noted that the secondary sensor provides only an estimate of ambient temperature because the values may be affected by its proximity to the worker's head.

According to the manufacturer, this device provides a direct estimate of heat stress on a worker. Because the ear canal borders the hypothalamus (the body's temperature regulator at the base of the brain), if the ear canal is isolated from the outside environment, the sensor will track the temperature of the hypothalamus. In addition to temperature monitoring by the QuesTemp II, standard WBGT readings were measured every five minutes in the immediate work area of this employee.

MEDICAL

Union representatives provided NIOSH with a list of names and work-related health concerns of current and past workers. Current workers were informed by union representatives of the NIOSH visit prior to our arrival. A list was compiled of those current employees who wanted to talk with us about their work-related health concerns and these employees were interviewed privately. In addition, the supervisors of the *Outerply, Repair, Final Finish, Spray Room*, and *Innerliner* departments were interviewed in order to assess the magnitude of health concerns voiced by employees to their supervisors. All interviews were done on a voluntary basis and no one refused to be interviewed. OSHA 200 logs were reviewed for information pertinent to the hazard request.

ERGONOMICS

The first objective of the ergonomic evaluation was to identify biomechanical risk factors for upper extremity (UE) CTDs in jobs performed at these facilities. A second objective was to develop recommendations to eliminate or reduce the hazards identified in these jobs. Jobs performed in the facility during the site visit were observed and videotaped. A total of eight operations were included in the evaluation. Additional information, such as the number of workers employed in each job, the types of tools used, the work station dimensions, and the force requirements of certain tasks, was also collected.

A job analysis was performed to assess the repetitiveness of each task and to document instances of awkward hand, wrist, arm, and trunk postures. Manual force requirements were estimated, and exposures to hand/arm vibration were also noted, although no direct measurements of hand-transmitted vibration were made.

RESULTS

METHYL ETHYL KETONE

All results and descriptions of PBZ and GA air samples collected for MEK are shown in Table 8. Four short-term (15 minutes) PBZ air samples were collected for MEK during a ring cleaning operation in the Fittings Department. Exposures ranged from 149 to 421 ppm. Three of these PBZ samples exceeded the NIOSH STEL of 300 ppm for MEK. Overall, PBZ concentrations ranged from <10 ppm up to 421 ppm, TWA over the period sampled.

1,1,1-TRICHLOROETHANE

Results from all of the PBZ and GA air samples collected for 1,1,1-trichloroethane are shown in Table 9. Five short-term (15 to 19 minutes) PBZ air samples were collected for 1,1,1-trichloroethane during the *interior* cleaning of fuel cells (using this solvent) in the *Final Finish* Department. These exposures ranged from 293 to 878 ppm. Four of these PBZ samples

exceeded the NIOSH STEL of 350 ppm for 1,1,1-trichloroethane. Overall, the PBZ concentrations ranged from <10 ppm up to 878 ppm, TWA over the period sampled.

ETHANOL

Three general area air samples were collected in the nylon spray operation to assess employee exposures to ethanol. As shown in Table 10, ethanol concentrations ranged from 26 to 160 ppm, expressed as TWAs over the period sampled. The NIOSH REL, OSHA PEL, and ACGIH TLV for ethanol is 1000 ppm for an 8- to 10-hour TWA exposure.

HEAT STRESS

The WBGT data collected on August 20, 1991, throughout the first (day) shift is presented in Table 11. The $WBGT_{in}$ measurements ranged from 75.4 to 83°F, with the dry bulb air temperature as high as 100.7°F and the radiant (globe) temperature reaching 101.4°F. These two highest temperatures were measured in the *Fittings* Department at approximately 2:30 p.m. The dry bulb temperatures outside ranged from 86 to 96.8°F on the day of this survey, weather conditions considered by the employees and management as mild for mid-summer.

The aural temperatures measured on an employee in the *Final Finish* Department are presented in Table 12. The aural temperatures remained fairly consistent over the approximately 2.5 hour sampling period, ranging from 36.8 to 37.1°C. None of the aural temperatures measured as part of this evaluation exceeded the maximum core body temperature of 38°C as proposed by NIOSH and the ACGIH.

MEDICAL

The employee information provided by union representatives included names and a brief account of health concerns for 37 current and former employees. Seven of the approximately 600 current employees were interviewed. In addition to these seven, 19 other current employees (not on the list initially provided by the union) were interviewed during our visit. Therefore, work-related health concern information was available for a total of 56 current or former employees. Figure 2 summarizes the health concerns of the 26 employees who were interviewed during this evaluation. All symptoms except for skin rash occurred in fewer than 25% of the individuals interviewed, and several (headaches, nervousness, and dizziness) were not suggestive of a particular medical diagnosis.

From a review of the OSHA 200 injury and illness records and interviews with employees, the most commonly reported health concern was skin rash. Workers attributed their skin rashes to contact with fiberglass, rubber cements, "shiny" gum on some of the rubber, solvent #6079, and MEK. Other suspected causes of the rashes included warm temperatures in the work area and buffing of cells (without skin protection). Several employees reported that protective clothing or gloves were not worn because they interfered with the ability to do the work and/or substances seeped through gloves.

Other substances that were specifically mentioned by those interviewed as contributing to a health concern included: solvent #12-400, which was reported to cause dizziness, nausea, bloating, and eye irritation; 1,1,1-trichloroethane, which reportedly causes dizziness and nausea; rubber "cements," the smell of which reportedly makes some persons dizzy and causes respiratory irritation; solvent #LQ-389, which reportedly causes eye irritation; solvent #7172, which reportedly causes nausea and nervousness; and solvent #6079, which reportedly causes shortness of breath and nervousness.

Two women were reported to have been diagnosed with breast cancer. There was one reported case of cancer of the colon. Colon and breast cancer are common in the general population and the few cases at Amfuel do not provide reason to suspect a work-related cause for the occurrence of these cancers.

There were eight reports of other cancers, but no specific details were available regarding these. The individuals with these reported cancers were either no longer working at Amfuel or did not volunteer to be interviewed. Since the data for these other reported cancers were incomplete, it is difficult to determine whether there was any basis to suspect that they were associated with exposures at work.

ERGONOMICS

The following ergonomic findings are based on observations and analysis of videotape made during a site visit to two Amfuel facilities on August 19-22, 1991. Eight operations were included in this evaluation. Information such as the number of workers employed in each job, the types of tools used, the work station dimensions, and the force requirements of certain tasks was collected. A job analysis was performed to assess the repetitiveness of each task and to document instances of awkward hand, wrist, arm and trunk postures. Manual force requirements were estimated, and exposures to hand/arm vibration were also noted, although no direct measurements of hand-transmitted vibration were made.

FITTINGS DEPARTMENT

Four separate processes are performed in the fittings department.

1. **Rubber Cutting Area**

Workers in the rubber panel cutting area process approximately 300 pieces (in batches of 5 or 10) per day. The steps in the operation are as follows:

(a) One worker unrolls rubber sheets from a spindle and cuts a length from the roll using a pair of standard scissors;

(b) The rubber sheet is placed on a die inside the press;

(c) The operator activates the press by pushing two palm-buttons;

(d) After the press operation is completed, the operator removes the rubber from the die, trims the edges with a pair of scissors, and places it in a stack. The operator repeats steps 1-3 until each piece in the batch has been processed;

(e) The operator removes the die from the press and uses a small hand tool to remove rubber pieces from the die holes;

(f) The operator places the die on a storage shelf and retrieves a new die to be installed in the press for the next batch.

Ergonomic concerns:

(a) Rubber materials vary significantly in thickness and elasticity. Scissors are used almost exclusively for cutting rubber sheets into smaller panels. Depending on the thickness and elasticity of the material, cutting rubber sheets with a pair of scissors can require significant manual force exertion. The metal scissor handles also concentrate stress on the operator's thumb and fingers.

(b) Cutting large sheets of rubber into smaller panels frequently requires a long reach. Similarly, the reach to place and position sheets on the die is approximately 23 inches. In some cases (cutting rubber into thin strips is one example), operators reach over rollers to put materials on the die. Forward reaches of more than 20 inches should be avoided to limit static effort.

(c) On one occasion, after the press operation was completed, the operator was observed holding the die over a barrel and removing rubber scrap from die holes with a punch tool. While this operation occurs infrequently, it is potentially fatiguing and inefficient. Investigators noted that it is not unusual for workers to work up to twenty hours overtime each week. Improving efficiency should reduce overtime work, resulting in a savings to the company and greater recovery time between shifts for the employees.

2. **Build-up Area**

Workers in the build-up area cement layers of rubber material to each other and to metal fittings. Complex fittings are processed one-at-a-time; however simple pieces can be processed in batches of five to ten at once. Depending on the complexity of the fitting, cycle time/batch can vary from half-an-hour to a day or more.

Ergonomic concerns:

(a) Build-up operations require frequent finger pressing and pinching, application of force with the palm of the hand, and use of small hand tools which concentrate stress on the soft tissues of the hand. Scissors and small roller-equipped hand tools, known as "stitchers" are frequently used in the fittings department to remove air pockets caught between layers of rubber and metal. Workers roll the stitcher over the surface of the rubber while applying downward forces. Use of the stitcher results in ulnar and radial wrist deviation, and repetitive elbow and shoulder flexion/extension. Frequent and prolonged application of manual force is strongly linked to CTD development.

(b) The height of the work station and the lack of movable fixtures contribute to awkward shoulder and wrist postures. The height of the table top is 35.5 inches; however, fixtures located on top of the work station add four to five inches to the working height. Because much of the work requires large downward applications of force (see #1 above), operators were frequently observed working with the shoulders abducted and wrists in ulnar or radial deviation. Work fixtures were fashioned from wooden blocks (non-movable); therefore, trimming rubber from fittings with scissors resulted in twisting of the wrists and extreme ulnar wrist deviation with finger flexion.

(c) Workers stand throughout their work shift. Prolonged standing allows the blood to pool in the legs and feet and places a static load on muscles in the legs, back and trunk.

(d) The visual demands in the build-up area are quite high; operators are responsible for detecting and removing air pockets which can be very small and difficult to detect.

3. **Curing Area**

Fittings are placed in metal molds and cured in oven-presses for periods of 20-45 minutes. Two large oven-presses and as many as 12 small ovens are operated continuously in the curing area.

Ergonomic concerns:

Material handling activities are the primary source of ergonomic hazards in the curing department. Workers push and pull molds weighing from 30 to 100 pounds between ovens, platforms, carts and storage racks. Moving large molds can require more than 50 pounds of force exertion with the back and upper extremities. Operators are also required to make excessive reaches across platforms and carts to pull molds from shelves or ovens. Shelf height varies from approximately 12 inches above the floor to 60 inches above the floor, causing the worker to execute pushes or pulls while bending or reaching above shoulder height. A chain-operated hoist is provided to help the operator lift covers from the tops of molds; however this device is somewhat cumbersome to operate.

4. **Finishing Area**

The final process performed in the fittings area is finishing. Workers remove excess rubber from metal fittings using vibrating drills, buffing wheels, air guns, razor knives and grinders. Most work is performed at hooded work stations, designed to collect dust generated during grinding processes.

Ergonomic problems:

(a) Work in the finishing area requires almost continuous use of hand tools, many of which are capable of transmitting significant levels of vibration to the hand. Few operators were observed wearing gloves during grinding or buffing tasks. The diameter of the grinding tool handle also appeared to be too large for female operators' hands. Handles which are larger than the user's hand diameter require more effort to grip and manipulate than handles which match, or are somewhat smaller than the user's hand size.

(b) Many of the operations in the finishing area require frequent and prolonged exertion of pinch grip forces. Razor blades (with and without handles) are frequently used to trim away small pieces of rubber. Operators in the final finishing area were observed using cretex bars to clean metal surfaces. Operators grip the cretex bar between the first two fingers and the thumb; therefore, use of the cretex bar is associated with forceful, sustained finger-pinching.

(c) A loud, high-pitched noise emanating from the grinders was presented continuously to operators in the finishing area during the site visit. No workers in the finishing area were observed wearing hearing protection.

(d) In one area of the finishing department, workers use large mounted buffing wheels to roughen the edges and surfaces of large rubber fittings (to improve bonding between the fitting and fuel cell). Although some fittings can be quite large and bulky, workers are required to hold and manipulate the fittings during this process, which often requires several minutes. Prolonged holding and application of pinch grip forces imposes a static load on the fingers, shoulders, and forearms. Static loading can result in soreness, loss of grip strength, and fatigue.

(e) All work in the finishing area is done while standing. Mats provided to cushion the work surface appeared thin and very worn.

RUBBER CUTTING DEPARTMENT

Although materials for fittings are cut in the *Fittings* department, panels for use in the *Innerliner* and *Outerply* Departments are cut in a separate, much larger area. Operations in the two areas are similar. Sheets of material are unrolled from a spindle to a predetermined length. Two operators, working from opposite sides of the cutting table, use standard (manual) scissors to cut the rubber sheet from the roll. Sheets are then stacked on a table. After a specified number of sheets have been cut, workers place a chalked template over the stack and rub chalk markings onto the top sheet. The operators use the chalk markings as a guide for cutting the large rubber sheets into smaller panels with power shears.

Two ergonomic concerns were noted in the *Rubber Cutting* department. First, cutting rubber sheets with a pair of manual scissors can require significant manual force exertion. The metal scissor handles concentrate stress on the operator's thumb and fingers. Although manual scissors are used less frequently in rubber cutting than in the *Fittings* or *Innerliner* departments, prolonged use could result in soreness or fatigue. Second, the work table used in the *Rubber Cutting* department is approximately five feet wide. Although two operators work from opposite sides of the table, neither can reach the middle without significant trunk flexion and an extended reach. Because cutting activities frequently require reaches to the middle of the table, operators spend much time leaning forward across the table with shoulders and arms extended.

INNERLINER AND OUTERPLY DEPARTMENTS

Fuel cells are largely constructed in the *Innerliner* and *Outerply* Departments, and these departments employ the largest number of workers. Operations in both areas are similar. In the *Innerliner* Department, the first layer of rubber is glued to a cardboard form (mandrel) in the shape of the fuel cell. Fittings are also applied to the fuel cell at this time. In the *Outerply* area, additional layer(s) of rubber are applied to the fuel cell. At the end of the process, the entire cell is placed in an autoclave to vulcanize (cure) the rubber and form a one piece unit.

Ergonomic concerns:

(a) Operations in the *Innerliner* and *Outerply* Departments require constant use of the hands. Applying rubber panels to the fuel cells requires finger pressing and pinching, application of force with the palm of the hand, and use of small hand tools which

concentrate stress on the soft tissues of the hand. Manual scissors are used almost exclusively for cutting rubber sheets into smaller panels for attachment to the fuel cells. Depending on the thickness and elasticity of the material, cutting rubber sheets with a pair of scissors can require significant manual force exertion. The metal scissor handles also concentrate stress on the operator's thumb and fingers. The scissors used in the inner and outer ply departments appeared to be somewhat smaller than those used in cutting areas (almost like school scissors), meaning that more movements were required to make the same lengths of cuts. The rubber material often becomes very difficult to manipulate due to its size and tendency to wrinkle and stick together. Therefore, pulling and stretching the fabric with the hands and fingers is commonly observed. Frequent application of manual force is strongly linked to CTD development.

(b) Fuel cells vary tremendously in size and shape. Although some cells are small enough to rest on top of a table, others are 56 inches tall. Although some fuels cells are mounted on mandrels (which allow the operator to rotate the cell), the largest fuel cells are placed on sawhorse structures. Rotation requires the help of the maintenance crew. Working height in this configuration ranges from 13 to 69 inches. Significant bending and overhead reaching is required to completely cover the entire cell with panels. In almost all cases, the work surface is positioned vertically (perpendicular to the floor). Flat surfaces are much easier to work on; however, many fuel cells have highly irregular and convoluted surfaces. The frequency of cutting, pulling and stretching activities is increased as the fuel cell surface becomes more irregular.

(c) All work is done while standing. No mats or cushions were provided for operators to stand on while working.

NYLON SPRAY DEPARTMENT

An operator, using a trigger-activated spray gun, coats fuel cells with cement and/or nylon in the spray area. No conspicuous ergonomic problems related to the spraying task were identified.

CLEANING/INSPECTION AND REPAIR DEPARTMENTS

During final inspection, workers suspend the fuels cell from ropes. Workers partly or completely crawl inside the fuel cell to inspect for leaks, and remove any residue remaining from the production process. Repairs are made by applying sealant to any leaks, or clamping heating blocks to areas of the cell where air bubbles are trapped.

ONION TANK ASSEMBLY

Onion tank (i.e., 3000 gallon portable water tank) assembly operations are performed at a separate facility in Monticello, Arkansas. The onion tank assembly process consists of *four* separate operations: (1) panel cutting, (2) assembly of side panels and tank collars, (3) assembly of bottom panels, and (4) final assembly. Onion tanks also undergo integrity testing before they are packed in crates for shipping. All operations are performed at adjacent work stations within the same building.

Ergonomic concerns:

(a) Stitching tools are used extensively throughout the assembly areas. The manual stitching tools are similar to those used in the Magnolia plant, except that the roller surface is beveled (i.e., slanted with respect to the roller axis). The change in the orientation of the roller causes the operator to extend and ulnar deviate the wrist during use. In addition, a power stitcher is sometimes used for stitching tasks. The power stitcher is equipped with a pistol grip and a trigger. Demonstration revealed that the power stitcher emits significant levels of vibration during operation. Because the tool is used with the pistol grip parallel to the work surface, the operator is forced to abduct the elbow and ulnar deviate the wrist during use. Finally, to control the speed of the motor, the operator must alternately depress and release the trigger on a continuing basis.

(b) In most cases, workers stand beside tables to perform work tasks. Workers in the final assembly area, however, were observed working on top of the assembly table on hands and knees. Prolonged kneeling on hard surfaces can result in knee trauma.

(c) Workers in the packing and shipping area use a Signotde combination strapping tool to band wooden boxes together. Three bands are placed around each box. Operation of the strapping tool requires repetitive force exertion with the shoulder and arm. Further, boxes rest on the floor during strapping; workers must bend at the waist to position and fix the straps in place.

DISCUSSION AND CONCLUSIONS

SOLVENT EXPOSURES

The PBZ air sampling results show that short-term (15 minutes) peak exposures to MEK and 1,1,1-trichloroethane occurred in excess of NIOSH criteria and OSHA exposure limits. Many of these episodes were related to the uncontrolled handling of these solvents or rubber cements by the workers without the benefit of local exhaust ventilation or other engineering controls. For example, workers in the *Cement House* and *Face Coater* areas were observed manually transferring MEK from 55-gallon drums into smaller plastic containers. These containers of solvent would then be used to clean brushes or other equipment or to mix batches of rubber cement. NIOSH investigators also observed employees throughout the facility transferring MEK-containing rubber cements from 5 or 10 gallon containers into disposable cardboard cartons or other receptacles. These activities were performed almost exclusively without the benefit of local exhaust ventilation (LEV).

In some instances employees handling MEK-containing cements and cleaners did not wear personal protective equipment such as impermeable gloves and/or aprons. In other situations workers who were exposed to MEK during operations such as ring cleaning and brush cleaning wore natural latex gloves and cloth aprons, materials which are not impermeable to this solvent.

Brushes are used by the workers in several department to apply the various rubber cements and other solvents to the fuel cells. During this NIOSH evaluation workers collected these brushes (and other miscellaneous hand tools) near the end of the day shift, sorted them (to eliminate the brushes which could not be reused), and then manually cleaned each brush using MEK. A short-term (19 minutes) air sample collected on the "brush cleaner" on 8/20/91 had 117 ppm of MEK. While the employee performing this cleaning job wore an air-purifying organic vapor respirator, he also used neoprene rubber gloves. Neoprene is not recommended for protection from MEK.

Glove materials such as Teflon® or butyl rubber offer superior resistance and impermeability to MEK.

RESPIRATORY PROTECTION

NIOSH investigators reviewed the written respirator program developed by Amfuel. While the main elements of any respiratory protection program were present (such as employee training, respirator selection, fit-testing) the overall program was judged inadequate based on the following findings:

- Improper Respirator Selection. Half-face piece organic vapor air purifying respirators were provided and worn by employees in the *Final Finish* Department for protection against 1,1,1-trichloroethane. Personal exposures to this solvent were measured in excess of the NIOSH STEL. Since NIOSH considers 1,1,1-trichloroethane to exhibit poor warning properties at concentrations below the REL, only supplied air or self-contained breathing apparatus (SCBAs) are recommended as suitable respiratory protection.

- Respirator Maintenance. Reportedly, most Amfuel employees changed the cartridges of their organic vapor respirators on a weekly schedule. However, because of the limited useful service time of organic vapor cartridges (or canisters), NIOSH recommends that they be replaced daily or after each use, or even more often if the wearer detects odor, taste, or irritation. Discarding the cartridge/canister is recommended at the end of the day, even if the wearer does not detect odor, taste, or irritation.

- Improper Respirator Use. NIOSH investigators observed several workers with beards wearing half-mask air purifying respirators. Facial hair can interfere with the facial seal of the respirator and prevent the wearer from obtaining a proper fit. Several employees were observed in the *Final Finish* Department cleaning the interior of small fuel cells by reaching inside the cell. During this cleaning process these employees would typically have their head and/or upper half of their body inside the cell. The cleaning solvent was 1,1,1-trichloroethane. Short-term (15-minute) exposures up to 878 ppm were measured on several of these workers. It was company policy that respirators were not required for these employees since they could remain outside the fuel cell with only their head (or upper body) inside the cell during the cleaning operation.

CONFINED SPACES

Using the definition found in the NIOSH criterion for working in confined spaces (*limited access; unfavorable natural ventilation; not intended for continuous worker occupancy*), the fuel cells which the employees must enter in the *Final Finish* Department are confined spaces.[19] Air sampling results from this NIOSH evaluation measured personal exposures which approached, but did not exceed, the NIOSH Immediately Dangerous to Life or Health (IDLH) level of 1000 ppm for 1,1,1-trichloroethane.[b] However, in the OSHA health and safety inspection which preceded this NIOSH evaluation, PBZ exposures in excess of 1000 ppm were measured among employees working inside the fuel cells in the Final Finish Department. Based on the following

---

[b] Half-mask organic vapor respirators were worn by the employees in the *Final Finish* Department when they were using 1,1,1-trichloroethane inside the fuel cells. The NIOSH respiratory protection guidelines do not recommend air-purifying respirators for protection from overexposures to 1,1,1-trichloroethane.

three reasons, the interior of the fuel cells should be classified as **"Class A"** confined spaces (See Table 6) whenever 1,1,1-trichloroethane is being used by the worker inside the cell. It is important to note that this confined space classification would apply regardless of the location or orientation of the fuel cell (for example, whether the cell in suspended from an elevated work table, sitting on the floor, etc.).

- PBZ exposures will vary depending on a number of factors, including the type of work task being performed, the work techniques utilized, the environmental conditions (temperature, humidity) during the sampling period, etc.

- Solvent exposures measured by NIOSH investigators in this evaluation ranged up to 878 ppm for a 15-minute STEL. However, air sampling data collected by OSHA compliance officers in 1990 measured airborne levels of 1,1,1-trichloroethane of up to 3536 ppm (STELs) during interior fuel cell cleaning in the *Final Finish* Department.

- Air-purifying organic vapor respirators, which do not offer adequate protection against 1,1,1-trichloroethane, were being worn by the employees when they were using this solvent for interior cleaning in the cells.

If employees are working inside the cells and no solvents (such as 1,1,1-trichloroethane) are being used, then the work area could be classified as a **"Class C"** confined space. Table 7 contains a check list of considerations for entry, working in, and exiting confined spaces.

ERGONOMICS

Some of the specific ergonomic recommendations include replacing manual cutting shears with powered shears; providing a fixture or tool to remove scrap rubber from the hole-cutting die; re-designing scissors with longer handles, shorter blades, and a self-opening mechanism to reduce the manual stress associated with prolonged and repetitive tool use; changing the height of the work stations to reduce the occurrence of awkward wrist postures and long reaches; providing stools, cushioned floor mats, or raised foot rests; providing additional lighting and (where needed) magnifying glasses to improve visibility; adding rollers to the bottom surface of platforms and racks to allow the operator to transfer molds between surfaces with less force exertion; reducing tool vibration; and modifying tool handles to eliminate conditions which require a pinch grip.

MEDICAL

Colon and breast cancers are common in the general population and the few cases at Amfuel did not suggest an occupational etiology. Since the data for the other reported cancers were incomplete, it is impossible to estimate the likelihood that they were associated with exposures at work. However, unless these cancers are in unusual sites or are all in the same site, it is unlikely that they would contribute evidence for being related to work.

The skin irritation reported by Amfuel employees is not unexpected. Both chemical and mechanical trauma to the skin has been reported among workers in similar rubber fabricating facilities.[20]

HEAT STRESS

Although not evident during the follow-up survey conducted in August 1991 during which WBGT measurements were obtained, it is possible that more severe heat stress conditions could exist during periods of warmer weather. Departments such as *Final Finish* (working inside the fuel cells) and *Fittings* (the use of heated presses to assemble the metal/rubber components) would likely be the most severely affected.

RECOMMENDATIONS

Since the recommendations from this evaluation cover a variety of areas, they have been grouped into categories.

ERGONOMICS

In all cases, engineering controls are the preferred method of reducing CTD risk. The goal of engineering controls is to make the job fit the person, not the person fit the job. Administrative (personnel-based) controls should be used only as a temporary measure to control CTD risk until engineering changes can be implemented. In addition, a medical management program for CTDs should be implemented. This program should provide mechanisms for identifying CTD cases at an early stage and providing treatment to employees before problems become more serious. Light duty assignments should be identified to allow workers continue work until CTD symptoms can be resolved.

The following ergonomic recommendations pertain to activities performed in the *Fittings, Innerliner, Outerply, Final Inspection, Nylon Spray, and Onion Tank Assembly* areas.

1. *Rubber Cutting Area*

   (a) **Implement an alternative method for cutting the rubber sheets.** The manual scissors currently in use should be replaced with powered shears to facilitate cutting. An alternative is to modify the rack holding the rolls of material to include a track-mounted cutting wheel, similar to those used to cut lengths of material in fabric stores. Powered shears are currently being used to cut materials used in other parts of the plant.

   (b) **Modify the method in which the press job is performed to reduce the reach distance to the back edge.** For operations where only one pass of the roller is required to complete the cycle, the worker should be instructed to return the roller to the back of the press before unloading finished pieces. This practice would eliminate reaches over the roller, and potential accidents involving the roller.

   (c) **Provide a fixture or tool to remove scrap rubber from the hole-cutting die.** A large ring- or U-shaped tool with small rod-like extensions around the perimeter could be used to remove scrap rubber from the die. The spacing of the rods would match the holes on the die. An alternative would be a fixture that the die could be placed on which would punch the scrap out of each hole simultaneously.

2. *Rubber Build-up Area*

   (a) **Alternative hand tools are needed to reduce the manual stress associated with prolonged and repetitive tool use**. Specifically, scissors and stitchers should be modified to reduce awkward hand/wrist postures and stress

concentrations on soft tissue areas. Scissors should be provided with longer handles (to distribute the stress over several fingers and a larger area of the palm), a shorter blade (to reduce elbow and shoulder abduction), and a self-opening mechanism (to reduce the force required to operate the scissors). Stitchers should have padded handles to reduce hand stress during continuous gripping. The handle should also be angled with respect to the roller to reduce wrist deviation.

(b) **For tasks requiring large downward forces, the working height of the hands should be 36 inches**.[8] Therefore, the height of the work station should be lowered when fixtures are used to accommodate for the extra height. Fixtures which allow free movement of the part are needed to reduce the occurrence of awkward wrist postures and long reaches.

(c) **Provide stools, cushioned floor mats, or raised foot rests**. These items would allow workers to rest leg and back muscles during prolonged periods of standing.

(d) **Additional lighting and mounted, swivel-type, magnifying glasses (such as those used in electronics assembly) are recommended to improve visibility in the build-up area**. Improving visibility would not only reduce neck flexion and eye strain, but should also improve product quality.

3. *Curing Area*

Recommendations include adding rollers to the bottom surface of platforms and racks. Rollers would allow the operator to transfer molds between surfaces with less force exertion. Stop bars, guides, or barriers would be needed along the edges of platforms and racks to make sure molds wouldn't roll when unattended. Use of the top and bottom storage shelves should be eliminated to eliminate excessive low or high reaches. Handles should be extended from the side of molds to reduce the reach required to remove molds from racks or ovens to the transportation platform.

4. *Finishing Area*

(a) **Interventions to reduce the tool vibration are needed**. At a minimum, operators should be provided with padded gloves, or the tool handle should be covered with a vibration-absorbing material (e.g., sorbothane). A regular tool maintenance program is also keep tool vibration levels at a minimum. Although not a permanent solution, rotating workers to other jobs which do not require vibrating tool use should be considered to limit exposure. Also, tools with smaller handle diameters are needed to reduce manual effort requirements. A handle diameter of 1.5 inches should better accommodate the majority of workers in the fittings area.

(b) **Modifications to tools handles are needed to eliminate conditions which require a pinch grip**. Razor blades should be mounted on handles to reduce pinch grip force and the risk of accidental cuts. It is recommended that an alternative to the cretex bar be used for cleaning metal and rubber surfaces. Specifically, a larger sanding block would to allow operators to hold the device with a power grip instead of a pinch grip.

(c) **Testing is recommended to determine if noise exposure is excessive**. If so, hearing protection should be made available to employees, and its use should be encouraged.

(d) **Replace pedestal-mounted grinders with hand-held models**. Buffing and grinding operations can be performed more easily using a hand-held grinder against a mounted work piece. A fixture should be provided to hold fittings while workers perform grinding operations with hand-held tools. Precautions (as discussed in (1) above) should be taken to limit vibration transmission by these tools.

(e) **Provide stools or sit/stand chairs to reduce static loading of leg, back and shoulder muscles**. At a minimum, cushioned mats should be replaced regularly, and a footrest should be provided at the front of the work station.

5. *Rubber Cutting Department*

Two recommendations to eliminate hazard in the *Rubber Cutting* department are provided. First, it is not clear why workers do not use the power shears to cut the rubber into sheets. The task could be performed just as quickly and efficiently with the power shears, and with less manual stress. A button-operated "guillotine" device could also be implemented; this option would probably be more expensive, but might allow the task to be performed by one operator instead of two. Second, an approach similar to that used in the fittings department could be used to cut the rubber sheets into smaller panels. Specifically, a die (albeit a large one) would be placed on the table before cutting operations were initiated. Sheets of rubber would be placed over the die; a large roller would then press the rubber into the die, cutting the sheets into smaller pieces. Since this operation would be largely automated (except for positioning the sheets correctly) it could, again, be performed by a single operator. Automating the process would also ensure more uniformity in sheet size. Further, the awkward reaches associated with the manual cutting process would be eliminated.

6. *Innerliner and Outerply Departments*

(a) **Minimize stress associated with tool use and work station configuration**. It is unclear, however, that an alternative exists for a less hand-intensive method of applying rubber to the fuels cells. As a beginning, the stitchers should be modified to reduce awkward hand/wrist postures and stress concentrations on soft tissue areas. Stitchers should have padded handles (to reduce hand stress during continuous gripping), and the handle should be angled with respect to the roller to reduce wrist deviation. Scissors and stitchers should be modified to reduce awkward hand/wrist postures and stress concentrations on soft tissue areas. Scissors should be provided with longer handles (to distribute the stress over several fingers and a larger area of the palm), a longer blade (to reduce the number of cuts needed to separate panels), and a self-opening mechanism (to reduce the force required to operate the scissors).

(b) **Provide anti-fatigue mats in areas where workers stand to work on fuel cells**. Low stools should also be provided for operators working on lower portions of the fuel cell. A sit/stand chair can be used when workers spend longer periods of time working on one area of the fuel cell.

7. *Nylon Spray Department*

Movement of mandrels through the spray area did appear to present some potential material handling problems however. The wheels on the mandrels are fairly small (diameter unknown); the floor covering in the spray area is cracked and pitted in some locations. Under best case conditions (wheels straight, good floor), a peak force of 25-35 pounds is required to initiate movement of the mandrels from a static position. This force increases significantly if the floor is uneven, or the rollers are not pointed in the right direction. Because excessive push/pull forces can result in back strain or overexertion; a regular floor maintenance program should be initiated, and larger wheels should be installed on mandrels.

8. *Cleaning/Inspection and Repair Departments*

Although inspection and repair processes are somewhat awkward (e.g., climbing in and out of the fuel cells), they are not highly forceful or repetitive. Therefore, the associated hazards are probably relatively minor. Recommendations include providing inspectors with magnifying glasses to improve their ability to detect defects.

9. *Onion Tank Assembly*

(a) **While powered tools are generally less stressful to use than manual tools, it is doubtful that the power stitcher represents an improvement in stitcher design**. Because the power stitcher produces significant levels of vibration, its use is not recommended. However, if the power stitcher must be used, modifications in its design are recommended. First, the pistol grip should be replaced with a straight handle, to allow the user to maintain a neutral wrist and shoulder position. The handle should also be covered with a material to absorb vibration and cushion the grip. Second, the finger-activated trigger should be replaced with a strip trigger, which distributes force over a larger surface area.

(b) **Floor mats and railing along the bottoms of work tables are needed to relieve foot and leg stress in workers who stand continuously**. Workers who perform final assembly tasks should be provided with knee and elbow pads, to reduce the potential for trauma during kneeling. A short ladder or stepping stool is needed to help workers climb up to the table top.

(c) **An automatic box strapper should be used to band wooden boxes together**. Boxes would be placed on a conveyor belt which would pass through the box strapper; the strapping machine would automatically position the straps and tighten the bands to the correct tension. This machine would not only eliminate the bending and repetitive force exertion associated with the manual strapping device, but would also make the process more efficient.

WORK PRACTICES

1. Gloves and protective clothing should be selected based on their permeation and degradation resistance to the solvents being used by the worker. NIOSH investigators observed employees using gloves made of natural latex or neoprene when handling solvent such as MEK or 1,1,1-trichloroethane. These glove materials are not recommended for protection from these solvents. Examples of materials which offer

superior protection include Teflon® or butyl rubber (for MEK exposures) and Viton®, Teflon®, or polyvinyl alcohol (for 1,1,1- trichloroethane exposures). While these glove materials offer better permeation and degradation resistance than natural latex, a glove's resistance to cuts, snags abrasion, punctures, or tears must also be considered. Another factor is an adequate sleeve (or cuff) length to protect the forearm from solvent exposure. Actual workplace conditions may require a combination of performance capabilities.

2. Employee exposures to MEK during brush cleaning could be reduced by changing or modifying the cleaning procedure. For example, a greater use of disposable (single-use) brushes by Amfuel should reduce the number of brushes which must be manually cleaned. The use of LEV to control solvent emissions during the brush cleaning operation would also reduce employee exposures.

3. The cleaning and inspection procedures followed by employees in the *Final Finish* Department should be examined with the intent of reducing workers' solvent exposures. For example, the use 1,1,1-trichloroethane during the *initial* interior cleaning and inspection of a fuel cell could be eliminated. The cell could be air-leak tested prior to the *second (final)* interior cleaning with this solvent.

CONFINED SPACES

A Confined Space program should be developed and implemented consistent with the guidelines contained in DHEW (NIOSH) Publication No. 80-106, "Working in Confined Spaces." This program would contain the minimum program elements for a **Class A** confined space as listed in Table 6. The interior of fuel cells would be considered confined spaces since these areas have limited access, unfavorable natural ventilation, and not intended for continuous worker occupancy. The interior of these fuel cells should be considered confined spaces regardless of the cell's spatial orientation (for example, sitting on the floor or suspended on a work table) or whether the worker is required to completely enter the cell to perform the work.

RESPIRATORY PROTECTION

1. Amfuel's written respiratory protection program (dated 6/15/91) contains most of the major program elements required by OSHA General Industry Standard 29 CFR Part 1910.134 and the NIOSH respirator guidelines. However, the program was not effective in several important areas, such as proper respirator selection and employee training. The written program should be revised to designate one individual with the responsibility for administering the respiratory protection program. Currently this responsibility is shared between the Personnel Department, the Production Supervisors, and the Environmental Coordinator. The written respirator program should also contain information on the following topics: (1) the departments/operations which require respiratory protection; (2) the correct respirator(s) required for each job/operation; (3) specifications that only NIOSH approved respiratory devices shall be used; and (4) the criteria used for the proper selection and use of respirators, including limitations. The Amfuel respirator program should also reference the requirements contained in the Confined Space program to assure that employees are adequately protected when working in these areas.
2. Based on NIOSH respirator selection criteria, an organic vapor/air purifying respirator is **not recommended** for protection against exposures to 1,1,1-trichloroethane. This is based on the uncertainty regarding the odor threshold for this compound. Either a

supplied air (SA) respirator or a self-contained breathing apparatus (SCBA) is recommended for exposures to 1,1,1-trichloroethane of up to 1000 ppm.[c] At levels above 1000 ppm, the NIOSH respirator selection criteria require (as a minimum) full-face piece SCBAs operating in a pressure-demand mode and equipped with emergency escape provisions.

HEAT STRESS

1. A written heat stress control policy and program which addresses the topics listed in the NIOSH document Criteria for a Recommended Standard: Occupational Exposure to Hot Environments, should be developed. Development of a heat alert program and medical surveillance should be incorporated into the heat stress program.

2. Additional monitoring should be conducted to determine the extent that warmer (and/or more humid) days will impact on heat stress conditions in these departments. These and other heat stress program elements are listed in Appendix A.

3. The use of portable spot coolers should reduce the heat stress to *Final Finish* employees while they work inside the fuel cells. Several models offer portability (the cooling unit can be mounted on casters), versatility (the cold air can be directed to the hot spots via flexible tubing), and ease of operation (some models operate from a standard 115 volt power supply and require only an occasional filter change). These cooling devices would also provide the necessary uncontaminated dilution air to the interior of the fuel cells.

MEDICAL

1. Physicians and other health care personnel who may provide medical care to Amfuel employees should be provided with pertinent information which would help to characterize the exposure potential for that worker to hazardous materials. For example, industrial hygiene air sampling data, personal protective equipment (if any) worn by the worker, and a listing of hazardous materials used by the employee while at work, would provide useful information to the health care provider in selecting the appropriate medical surveillance for that worker. If respiratory protective equipment is determined to be necessary, medical evaluations should be conducted to determine the worker's physical fitness for using this equipment. In addition, complete medical, chemical exposure, and occupational history information should be maintained for each worker.

2. Amfuel should provide a worker education program designed to inform the worker about the potential health risks from exposure to hazardous substances, the proper use of personal protective equipment or clothing, and proper work practice procedures. This should involve more than simply handing out literature for the employees to read. Health care personnel and/or others knowledgeable about these issues should discuss each of these topics with the employees, allowing adequate time for questions.

3. Although initially unrelated to this health hazard evaluation request, exposure to environmental tobacco smoke (ETS) is an important public health problem. Reports

---

[c] Based on NIOSH recommendations, an immediately dangerous to life or health (IDLH) atmosphere exists upon exposures to 1,1,1-trichloroethane of 1000 ppm.

from the Surgeon General, the National Research Council and EPA have concluded that exposure to ETS may be associated with a wide range of health (e.g., lung cancer) and comfort (e.g., eye, nose, and throat irritation and odor) effects.[21-25] NIOSH has determined that ETS may be related to an increased risk of lung cancer and possibly heart disease in occupationally exposed workers who do not smoke themselves.[26]

A smoking cessation program may be necessary to assist those employees who are current smokers. If smoking is permitted within the facility, it should be restricted to designated smoking areas.[26] These areas should be provided with a *dedicated exhaust system* (room air directly exhausting to the outside), an arrangement which eliminates the possibility of re-entrainment and recirculation of any secondary cigarette smoke. In addition, *the smoking area should be under negative pressure relative to surrounding occupied areas*. The ventilation system supplying the smoking lounge should be capable of providing at least 60 cfm of outdoor air per person. This air can also be obtained from the surrounding spaces (transfer air).

VENTILATION

The following recommendations are based on job-specific observations which were made during the walk-through ventilation evaluation performed in 1991. Additionally, Appendix B contains examples of ventilation designs applicable to a variety of industrial operations, including spray painting, grinding, and buffing. These ventilation designs were obtained from *Industrial Ventilation: A Manual of Recommended Practice* (19th Edition), a document published by the ACGIH.

1. *Ring Wash and Pot Wash.* The effectiveness of the current slot ventilation design can be increased by enclosing the sides.

2. *Ring Reclaim.* This operation is infrequently performed and is located outdoors. Considering these factors, the current requirement to continuously operate the three propeller-type fans mounted adjacent to the ring reclaim tank to is probably unnecessary. The ring reclaim operator, however, would receive a greater reduction in his/her exposures by using a remotely operated electric or pneumatic hoist to increase the distance between the worker and the reclaim tank. In addition, the tank temperature should be lowered prior to parts removal to decrease tank emissions.

3. *Fittings Department.* The elimination of the excessive lengths of flexible exhaust duct will improve the LEV effectiveness at the pedestal grinders and buffers. Sharp angled bends in the duct should be avoided. Additionally, since flexible duct has greater air resistance, it should not be used in place of smoother, solid-wall duct. A LEV system should be designed for the final finishers to capture the fine metal dust generated during this operation (there was no LEV provided for this procedure during this NIOSH survey). Transport velocity in ducts which carry particulates should be > 3500 feet per minute (fpm) to avoid settling.

4. *Spray Booth (Neoprene).* The existing panel fan should be replaced with a new blower and duct to increase the exhaust ventilation capability of the spray booth. The new duct should extend above roof height to prevent recirculation back into the plant.

5. *Spray Booth (Cement Room).* The fire door, located adjacent to this booth, should be kept closed. Local exhaust ventilation should be considered to control spurious emissions from the cement and solvent container stored adjacent to the booth. To avoid

unnecessary solvent exposures, employees should be encouraged to keep the workpiece between them and the exhaust during spraying.

6. *Hydrohone (Fittings Department)*. The air intake holes (plugged with fiberglass insulation during the NIOSH follow-up evaluation) must be kept open to permit air to enter the abrasive blasting chamber. The entire bag-house filter assembly should be relocated outside the building to minimize dust generation inside the building during cleaning. This filter assembly disconnects easily from the abrasive blasting cabinet. In addition, the exhaust system should be kept running whenever the cabinet is opened.

7. *Vapor Degreaser (Fittings Department)*. The exhaust ducts from the degreaser should be extended above the roof line of the building to prevent recirculation back into the building. The water temperature should be monitored to assure that chilled water is being provided to the degreaser coils. An automatic temperature monitoring system connected to an indicator alarm is recommended for the degreaser.

8. *Face Coater.* The canopy hood at the take-off end of the face coating line should be extended to enclose the face coating operation as much as possible. Slot ventilation should be added along both sides of the cement dip tray and this area should be enclosed as much as possible.

9. *Cutting Room (Innerliner Department).* Repair bent slot ventilation on either side of the cutting table. The height of these slots should be extended above the height of the material on the table. Following this repair and redesign, the slot ventilation system for this operation should be balanced.

10. *Tab Assembly (Innerliner Department).* The drive belt on the overhead paddle fan should be tightened. This fan should be repositioned to direct its air movement slightly downward and toward the tab assembly operation.

11. *Cement Room.* Slot exhaust hoods should be installed which are large enough to accommodate "brush washing," the weekly cleaning of the cement pots, and the small batch mixing of the Uniroyal® cements.

12. *Miscellaneous.* The use of fresh air showers in areas where solvents are used should be investigated. These devices provide localized clean air at low velocity around the employee. The air's low velocity minimizes the mixing of the clean air with contaminated air.

REFERENCES

1. CDC [1992]. Compendium of NIOSH recommendations for occupational safety and health standards. Atlanta, GA: U.S. Department of Health and Human Services, Public Health Service, Centers for Disease Control, National Institute for Occupational Safety and Health.

2. ACGIH [1992]. Threshold limit values and biological exposure indices for 1992-93. Cincinnati, OH: American Conference of Governmental Industrial Hygienists.

3. Code of Federal Regulations [1989]. OSHA Table Z-1. 29 CFR 1910.1000. Washington, DC: U.S. Government Printing Office, Federal Register.

4. U.S. DOL [1991]. BLS reports on survey of occupational injuries and illnesses in 1991. Washington D.C.: U.S. Department of Labor, Bureau of Labor Statistics, U.S. DOL News.

5. Armstrong TJ [1986]. Ergonomics and cumulative trauma disorders. Hand Clinics 2:553-565.

6. Putz-Anderson, V (ed) [1988]. Cumulative trauma disorders: a manual for musculoskeletal diseases of the upper limbs. New York, NY: Taylor & Francis.

7. Silverstein BA, Fine LJ, Armstrong TJ [1987]. Hand-wrist cumulative trauma disorders in industry. British Journal of Industrial Medicine 43:779-784.

8. Armstrong TJ, Foulke J, Joseph B, Goldstein S [1982]. Investigation of cumulative trauma disorders in a poultry processing plant. American Industrial Hygiene Association Journal 43:103-116.

9. Hales T, Habes D, Fine L, Hornung R, Boiano J [1989]. John Morrell & Co., Sioux Falls, SD; HETA Report 88-180-1958. Cincinnati, OH: U.S. Department of Health and Human Services, Public Health Service, Centers for Disease Control, National Institute for Occupational Safety and Health, Division of Surveillance Hazard Evaluation and Field Studies.

10. Habes DJ, Putz-Anderson V [1985]. The NIOSH program for evaluating hazards in the workplace. Journal of Safety Research 16:49-60.

11. Yaglou C, Minard D [1957]. Control of heat casualties at military training centers. Arch Indust Health 16:302-316.

12. Belding H, Hatch T [1955]. Index for evaluating heat stress in terms of resulting physiological strain. Heat Pip Air Condit 27:129.

13. Houghton F, Yaglou C [1923]. Determining lines of equal comfort. J Am Soc Heat and Vent Engrs 29:165-176.

14. NIOSH [1986]. Criteria for a recommended standard: occupational exposure to hot environments, revised criteria. Cincinnati, OH: U.S. Department of Health and Human

Services, Public Health Service, Centers for Disease Control, National Institute for Occupational Safety and Health, DHHS (NIOSH) Publication No. 86-113.

15. ACGIH [1990]. Threshold limit values and biological exposure indices for 1990-1991. Cincinnati, OH: American Conference of Governmental Industrial Hygienists.

16. NIOSH [1972]. Criteria for a recommended standard: occupational exposure to hot environments. Cincinnati, OH: U.S. Department of Health, Education and Welfare, Health Services and Mental Health Administration, National Institute for Occupational Safety and Health, DHEW (NIOSH) Publication No. 72-10269.

17. Kenney WL [1985]. A review of comparative responses of men and women to heat stress. Environ Res 37:1-11.

18. NIOSH [1977]. Assessment of deep body temperatures of women in hot jobs. Cincinnati, OH: U.S. Department of Health, Education, and Welfare, Public Health Service, Health Services and Mental Health Administration, National Institute for Occupational Safety and Health, DHEW (NIOSH) Publication No. 77-215.

19. NIOSH [1979]. Working in confined spaces. Cincinnati, OH: U.S. Department of Health, Education, and Welfare, Public Health Service, Health Services and Mental Health Administration, National Institute for Occupational Safety and Health, DHEW (NIOSH) Publication No. 80-106.

20. Klemme JC [1985]. Chemical and mechanical trauma to the skin in a rubber fabrication facility. American Journal of Industrial Medicine 8:355-362.

21. HEW [1979]. Smoking and health: a report of the Surgeon General. Office on Smoking and Health. Washington, D.C.: U.S. Department of Health, Education, and Welfare, U.S. Government Printing Office.

22. HHS [1982]. The health consequences of smoking -- cancer: a report of the Surgeon General. Office on Smoking and Health. Washington, D.C.: U.S. Department of Health and Human Services, U.S. Government Printing Office.

23. HHS [1984]. The health consequences of smoking -- chronic obstructive lung disease: a report of the Surgeon General. Office on Smoking and Health. Washington, D.C.: U.S. Department of Health and Human Services, U.S. Government Printing Office.

24. HHS [1983]. The health consequences of smoking -- cardiovascular disease: a report of the Surgeon General. Office on Smoking and Health. Washington, D.C.: U.S. Department of Health and Human Services, U.S. Government Printing Office.

25. HHS [1986]. The health consequences of involuntary smoking: a report of the Surgeon General. Office on Smoking and Health. Washington, D.C.: U.S. Department of Health and Human Services, U.S. Government Printing Office.

26. CDC [1991]. NIOSH current intelligence bulletin 54-environmental tobacco smoke in the workplace (lung cancer and other effects). Cincinnati, OH: U.S. Department of Health and Human Services, Public Health Service, Centers for Disease Control, National Institute for Occupational Safety and Health, DHHS (NIOSH) Publication No. 91-108.

AUTHORSHIP AND ACKNOWLEDGEMENTS

Report Prepared by:

Gregory A. Burr, C.I.H.
Supervisory Industrial Hygienist
Industrial Hygiene Section
Hazard Evaluations and Technical Assistance Branch
Division of Surveillance, Hazard Evaluations, and Field Studies

Katharyn A. Grant, Ph.D.
Industrial Engineer
Psychophysiology and Biomechanics Section
Applied Psychology and Ergonomics Branch
Division of Biomedical and Behavioral Science

A. Yvonne Boudreau, M.D.
Medical Officer
Medical Section
Hazard Evaluations and Technical Assistance Branch
Division of Surveillance, Hazard Evaluations, and Field Studies

Matthew K. Klein, P.E.
Research Mechanical Engineer
Industrial Hygiene Section

Field Assistance by:

Steve Lenhart, C.I.H.
Senior Industrial Hygienist
Industrial Hygiene Section

John A. Decker, M.S.
Industrial Hygienist
Industrial Hygiene Section

Leslie Copeland, M.S.
Visiting Scientist
Medical Section
Hazard Evaluations and Technical Assistance Branch
Division of Surveillance, Hazard Evaluations, and Field Studies

Originating Office:

Hazard Evaluations and Technical Assistance Branch
Division of Surveillance, Hazard Evaluations, and Field Studies

DISTRIBUTION AND AVAILABILITY OF REPORT

Copies of this report may be freely reproduced and are not copyrighted. Single copies of this report will be available for a period of 90 days from the date of this report from the NIOSH Publications Office, 4676 Columbia Parkway, Cincinnati, Ohio 45226. To expedite your request, include a self-address mailing label along with your written request. After this time, copies may be purchased from the National Technical Information Service, 5285 Port Royal Road, Springfield, VA 22161. Information regarding the NTIS stock number may be obtained from the NIOSH Publications Office at the Cincinnati address.

Copies of this report have been sent to:

1. Amfuel, Inc., Magnolia, Arkansas
2. United Rubber Workers, International Union, Akron, Ohio
3. United Rubber Workers, Local 607, Waldo, Arkansas
4. OSHA, Region VI
5. NIOSH

For the purpose of informing affected employees, copies of this report shall be posted by the employer in a prominent place accessible to the employees for a period of 30 calendar days.

TABLE 2
Toxicity and Permissible Exposure Information
HETA 90-246
Amfuel, Inc.

SUBSTANCE	TOXICITY INFORMATION	EXPOSURE CRITERIA
Methyl chloroform (1,1,1-trichloroethane)	Clear, non-flammable liquid. Oral toxicity of this solvent is low. Although skin absorption can occur, it is not considered a significant exposure route. Methyl chloroform is an anesthetic and, like many organic solvents, will defat the skin, causing dryness, redness, and scaling of the exposed skin. This solvent is poorly metabolized once in the body and is excreted unchanged in the expired air. Deaths due to anesthesia and/or cardiac sensitization has been observed in industrial exposures involving poorly ventilated or confined areas. In some studies involving human exposures, anesthetic effects were observed at concentrations approaching 500 ppm. In a long-term study of workers exposed to methyl chloroform (at concentrations which in some situations exceeded 200 ppm) no adverse effects related to exposure were observed.	NIOSH REL = 350 ppm (ceiling limit) OSHA PEL = 350 ppm (TWA) 450 ppm (short-term exposure limit) ACGIH TLV = 350 ppm (TWA) 450 ppm (short-term exposure limit)
Methyl ethyl ketone	MEK, a colorless, flammable liquid with a low odor threshold is a widely used industrial solvent. The threshold for eye and nose irritation is estimated at approximately 200 ppm. Most people can smell MEK at a concentration of 10 ppm. With the exception of complaints about its objectionable odor (which resembles acetone), few serious health effects have been observed under typical industrial exposure conditions. In addition to being absorbed through the skin, prolonged skin contact can lead to dermatitis. In one study workers exposed to airborne MEK concentrations of 300 to 600 ppm (along with skin contact to MEK) complained of numbness in the upper extremities. MEK is eliminated either in the expired air (unchanged) or in the urine (metabolized).	NIOSH REL = 200 ppm (TWA) 300 ppm (short-term exposure limit) OSHA PEL = 200 ppm ACGIH TLV = 200 ppm (TWA) 300 ppm (short-term exposure limit)
Ethanol	Also called ethyl alcohol, this solvent is flammable, colorless, and possesses a distinct odor. Under typical industrial exposure conditions, the acute toxicity of ethanol is low. Effects resulting from over-exposure to ethanol may include incoordination and drowsiness. Eye and skin irritation may result following contact with the liquid. In its vapor form ethanol is irritating to the eyes and upper respiratory tract at concentrations well below the established exposure criteria.	NIOSH REL = 1000 ppm (TWA) OSHA PEL = 1000 ppm (TWA) ACGIH TLV = 1000 ppm (TWA)

Abbreviations:

REL = Recommended Exposure Limit
PEL = Permissible Exposure Limit
TLV = Threshold Limit Value
STEL = Short-term exposure limit
ppm = part per million
TWA = Time-weighted average

References:

1. ACGIH [1986]. Documentation of the threshold limit values and biological exposure indices, 5th edition. Cincinnati, OH: American Conference of Governmental Industrial Hygienists.
2. Procter NH, Hughes JP, Fischman ML [1988]. Chemical hazards of the work place. 2nd ed. Philadelphia: J.B. Lippincott Co. Proctor and Hughes
3. ILO [1983]. Encyclopaedia of occupational health and safety, 3rd revised edition. Volumes 1 and 2. Geneva, Switzerland: International Labour Office.
4. Patty's Industrial Hygiene and Toxicology [1982]. Volumes 2A, 2B, and 2C - Toxicology. John Wiley and Sons, New York.

Table 4
Estimated Metabolic Rate - Final Finish Operator
HETA 90-246
Amfuel, Magnolia, Arkansas

	Range (Kcal/min)[a]	Estimate (Kcal/min)
Body Position Sitting and standing, with some walking	0.6 to 3.0	1.5
Type of Work 1. Final Finishing - cleaning exterior of fuel cell *(Heavy work, both arms and moderate work, whole body)* 2. Final Finishing - cleaning interior of fuel cell *(Heavy work, both arms and heavy work, whole body)*	1.0 to 9.0	5.5[b]
Basal Metabolism	1.0	1.0
Summation		8.0
Hourly Estimation		480
Metabolic Rate Work Category		High

NOTES:

a kcal/min = kilocalories per minute.

b Metabolic estimate for cleaning *exterior* surfaces of fuel cells is 4.0; metabolic estimate for the *interior* cleaning is 7.0. Average estimate (including both interior and exterior) is 5.5.

TABLE 5
CONFINED SPACE CLASSIFICATION TABLE
HETA 90-246
Amfuel, Magnolia, Arkansas

Parameters	Class A	Class B	Class C
Characteristics	Immediately dangerous to life - rescue procedures require the entry of more than one individual fully equipped with life support equipment - maintenance of communication requires an additional standby person stationed within the confined space	Dangerous, but not immediately life threatening - rescue procedures require the entry of no more than one individual fully equipped with life support equipment - indirect visual or auditory communication with workers	Potential hazard - requires no modification of work procedures - standard rescue procedures - direct communication with workers, from outside the confined space
Oxygen	16% or less *(122 mm Hg) or greater than 25% *(190 mm HG)	16.1% to 19.4% *(122 - 147 mm Hg) or 21.5% to 25% (163 - 190 mm Hg)	19.5 % - 21.4% *(148 - 163 mm Hg)
Flammability Characteristics	20% or greater of LFL	10% - 19% LFL	10% LFL or less
Toxicity	**IDLH	greater than contamination level, referenced in 29 CFR Part 1910 Sub Part Z - less than **IDLH	less than contamination level referenced in 29 CFR Part 1910 Sub Part Z

* Based upon a total atmospheric pressure of 760 mm Hg (sea level)
** Immediately Dangerous to Life or Health - as referenced in NIOSH Registry of Toxic and and Chemical Substances, Manufacturing Chemists data sheets, industrial hygiene guides or other recognized authorities.

TABLE 6
CHECK LIST OF CONSIDERATIONS FOR ENTRY, WORKING IN AND EXITING CONFINED SPACES
HETA 90-246
Amfuel, Magnolia, Arkansas

	ITEM	CLASS A	CLASS B	CLASS C
	1. Permit	X	X	X
	2. Atmospheric Testing	X	X	X
	3. Monitoring	X	O	O
	4. Medical Surveillance	X	X	O
	5. Training of Personnel	X	X	X
	6. Labeling and Posting	X	X	X
	7.			
	Preparation	X	X	O
	Isolate/lockout/tag	X	X	O
	Purge and ventilate	O	O	O
	Cleaning Processes	X	X	O
	Requirements for special equipment/tools			
	8.Procedures			
	Initial plan	X	X	X
	Standby	X	X	O
	Communications/observation	X	X	X
	Rescue	X	X	X
	Work	X	X	X
	9.			
	Safety Equipment and Clothing	O	O	O
	Head protection	O	O	O
	Hearing protection	O	O	O
	Hand protection	O	O	O
	Foot protection	O	O	O
	Body protection	O	O	
	Respiratory protection	X	X	X
	Safety belts	X	O	
	Life lines, harness			
10.	Rescue Equipment	X	X	X
11.	Recordkeeping/Exposure	X	X	

X = indicates requirement
0 = indicates determination by the qualified person

TABLE 7
SAMPLING AND ANALYTICAL METHODS
HETA 90-246
AMFUEL, MAGNOLIA, ARKANSAS

METHOD (where applicable)	COLLECTION DEVICE	SAMPLING FLOW RATE	ANALYTICAL METHOD	COMMENTS
NIOSH Method No. 2500 (Methyl ethyl ketone) (MEK)	ORBO® 90 adsorbent tubes	20 cc/min (full-shift samples) 50 cc/min (short-term samples) 100 cc/min (short-term samples)	Gas chromatography, flame ionization detector Limit of Detection = 0.01 mg/sample Limit of Quantitation = 0.03 mg/sample	Short-term (15 to 20 minutes) samples collected to evaluate "peak" exposures during the work day.
NIOSH Method No. 1003 (1,1,1-trichloroethane) (methyl chloroform)	Charcoal tubes (100/50 mg size)	20 cc/min (full-shift samples) 50 cc/min (short-term samples)	Gas chromatography, flame ionization detector Limit of Detection = 0.01 mg/sample Limit of Quantitation = 0.03 mg/sample	Short-term (15 to 20 minutes) samples collected to evaluate "peak" exposures during the work day.
HEAT STRESS	Wibget® direct reading wet bulb globe temperature monitor with data logging capability	Temperature readings recorded every 5 minutes in areas evaluated	Direct reading instrument. $WBGT_{in}$ = 0.7 (Wet bulb) + 0.3 (Globe) $WBGT_{out}$ = 0.7 (Wet bulb + 0.2 (Globe) + 0.1 (Dry bulb)	General area measurements collected throughout the work day and compared to NIOSH and ACGIH heat stress criteria.

Abbreviations: cc/min = cubic centimeters of air per minute
FID = Flame Ionization Detector
WB = Wet Bulb Temperature
Globe = Globe Temperature
GC = Gas Chromatography
WBGT = **W**et **B**ulb **G**lobe **T**emperature
DB = Dry Bulb Temperature

Source for analytical methods:

Eller PM, ed. [1989]. NIOSH manual of analytical methods. 3rd rev. ed. Cincinnati, OH: U.S. Department of Health and Human Services, Public Health Service, Centers for Disease Control, National Institute for Occupational Safety and Health, DHHS (NIOSH)

TABLE 8
RESULTS FROM PERSONAL BREATHING-ZONE AND GENERAL AREA AIR SAMPLES FOR METHYL ETHYL KETONE
HETA 90-246
Amfuel, Magnolia, Arkansas

DATE	SAMPLE No.	Sample Type	DEPARTMENT	ACTIVITY	TIME PERIOD SAMPLED	SAMPLE VOLUME (LITERS)	CONCENTRATION (PPM)
8/20/91	1	PBZ	Final Finish	KC-135. Wiping outside with MEK for 15 minutes. Table #26	7:48 am to 8:06 am	0.9	??
8/20/91	8	PBZ	Final Finish	KC-135. Wiping outside of cell (forward portion). Table #26	10:05 am to 10:21 am	0.8	??
8/20/91	10	PBZ	Final Finish	F-18. First cleaning. Table #2	8:30 am to 10:36 am	2.5	??
8/20/91	12	PBZ	Final Finish	KC-135. Wiping outside of cell (forward portion). Table #26	10:21 am to 11:00 am	1.0	??
8/20/91	13	PBZ	Final Finish	KC-135. Completed outside cleaning of cell. Began suspending cell and cleaning inside.	11:00 am to 11:15 am	0.8	??
8/20/91	15	PBZ	Final Finish	F-16 (A model). Begin outside cleaning. Table #16	9:18 am to 11:20 am	2.4	??
8/20/91	25	PBZ	Final Finish	KC-135. Wiping outside with MEK for 15 minutes. Table #26	10:02 am to 1:16 pm	3.9	??
8/20/91	26	AREA	Final Finish	On Table #13	9:42 am to 1:20 pm	10.9	??
8/20/91	28	PBZ	Final Finish	F-18. First cleaning. Began inside cleaning at 2:05 pm. Table #2	10:36 am to 2:02 pm	4.1	??
8/20/91	30	AREA	Final Finish	On Table #13	1:20 pm to 3:18 pm	5.9	??
8/20/91	32	PBZ	Final Finish	F-16 (A model). Continuation of outside cleaning. Table #16	11:20 am to 3:42 pm	5.4	??
8/20/91	35	PBZ	Final Finish	KC-135. Wiping outside of cell (forward portion). Table #26	1:16 pm to 3:49 pm	3.1	??
8/20/91	36	PBZ	Finial Finish	F-18. Continued inside cleaning. Table #2	2:02 pm to 3:55 pm	2.3	??
8/20/91	37	PBZ	Cement House	Brush cleaning. Short-term activity performed on 2nd shift. Short-term sample.	3:29 pm to 3:48 pm	0.9	??
8/20/91	40	PBZ	Final Finish	KC-135. Beginning to wipe exterior of cell. Table #26	2:46 pm to 4:16 pm	4.5	??
8/20/91	43	PBZ	Old Cement House	Pot washing. Operation performed on 3rd shift. Consecutive short-term samples collected.	11:45 pm to 12:05 am	1.0	??
8/21/91	44	PBZ	Old Cement House	Pot washing. Operation performed on 3rd shift. Consecutive short-term samples collected.	12:05 am to 12:20 am	0.8	??

TABLE 8 (continued)
RESULTS FROM PERSONAL BREATHING-ZONE AND GENERAL AREA AIR SAMPLES FOR METHYL ETHYL KETONE
HETA 90-246
Amfuel, Magnolia, Arkansas

DATE	SAMPLE No.	Sample Type	DEPARTMENT	ACTIVITY	TIME PERIOD SAMPLED	SAMPLE VOLUME (LITERS)	CONCENTRATION (PPM)
8/21/91	45	PBZ	Old Cement House	Pot washing. Operation performed on 3rd shift. Consecutive short-term samples collected.	12:20 am to 12:35 am	0.8	??
8/21/91	46	PBZ	Old Cement House	Pot washing. Operation performed on 3rd shift. Consecutive short-term samples collected.	12:35 am to 12:50 am	0.8	??
8/21/91	47	PBZ	Face Coater	Face coating end. Cleaning roller and changing cements (#899 to PU 257). Cleaning and change-over completed at 8:55 am.	8:42 am to 8:57 am	0.8	??
8/21/91	48	PBZ	Cement Spray Room	Changing cements (to PF149, which contains MEK and toluene). Using methyl n-propyl ketone. Continued spraying after changing cements.	9:15 am to 9:30 am	0.8	??
8/21/91	52	PBZ	Face Coater	Take up end (opposite of face coating end).	7:48 am to 10:20 am	3.0	??
8/21/91	53	PBZ	Face Coater	Face coater end.	7:50 am to 10:22 am	3.0	??
8/21/91	54	PBZ	Cement Spray Room	Cement spraying.	7:37 am to 10:40 am	3.7	??
8/21/91	55	PBZ	"New" Cement Spray Room	Alternates spraying MEK-based cements and latex coatings. Two different spray booths.	8:22 am to 10:37 am	2.7	??
8/21/91	58	AREA	Cement Spray Room	Spraying MEK-based cements.	8:33 am to 11:33 am	3.6	??
8/21/91	59	PBZ	Cement House	Cement mixer. Mixing a cement batch during this short-term sample.	12:36 pm to 12:51 pm	1.5	??
8/21/91	60	PBZ	Cement House	Cement mixer. Mixing a cement batch during this short-term sample. Dispensing MEK to a 55-gallon container from bulk storage using a nozzle dispenser.	12:51 pm to 1:06 pm	1.5	??
8/21/91	61	PBZ	Face Coater	Take up end (opposite of face coating end).	10:20 am to 1:20 pm	3.6	??
	62	PBZ	Face Coater	Face coating end.	10:22 am to 1:22 pm	3.6	??
8/21/91	63	PBZ	Cement House	Cement mixer. Dispensing MEK to a 55-gallon container from bulk storage using a nozzle dispenser.	1:07 pm to 1:23 pm	1.6	??
8/21/91	64	PBZ	Face Coater	Transfer (by hand) of PU-267 cement from a 5 gallon bucket to the face coating tray using a cardboard tub.	2:09 pm to 2:24 pm	0.8	??
8/21/91	65	PBZ	Fittings	Ring cleaning.	2:24 pm to 2:39 pm	0.8	??

TABLE 8 (continued)
RESULTS FROM PERSONAL BREATHING-ZONE AND GENERAL AREA AIR SAMPLES FOR METHYL ETHYL KETONE
HETA 90-246
Amfuel, Magnolia, Arkansas

DATE	SAMPLE No.	Sample Type	DEPARTMENT	ACTIVITY	TIME PERIOD SAMPLED	SAMPLE VOLUME (LITERS)	CONCENTRATION (PPM)
8/21/91	66	PBZ	Fittings	Ring cleaning.	2:39 pm to 2:54 pm	0.87	??
8/21/91	67	PBZ	Face Coater	Transfer (by hand) of PU-267 cement from a 5 gallon bucket to the face coating tray using a cardboard tub.	2:45 pm to 2:58 pm	0.7	??
8/21/91	68	PBZ	Face Coater	Take up end (opposite of face coating end).	1:20 pm to 3:00 pm	2.0	??
8/21/91	69	PBZ	Face Coater	Face coating end.	1:22 pm to 3:01 pm	2.0	??
8/21/91	70	PBZ	Fittings	Ring cleaning (employee left for break during this sampling period so ring washing activity was interrupted).	2:54 pm to 3:29 pm	1.8	??
8/21/91	71	PBZ	Fittings	Ring cleaning performed throughout this sampling period.	3:29 pm to 3:44 pm	0.8	??
8/21/91	72	PBZ	Fittings	Ring cleaning performed throughout this sampling period.	3:44 pm to 3:59 pm	0.8	??
8/21/91	75	PBZ	Fittings	Full-shift sample collected on employee assigned to ring cleaning. Also performed other duties which did not involve solvents.	8:10 am to 4:00 pm	9.4	??
8/21/91	92	PBZ	"New" Cement Spray Room	Alternates spraying MEK-based cements and latex coatings. Uses two different spray booths.	10:37 am to 1:19 pm	3.2	??
8/21/91	93	PBZ	Cement Spray Room	Spraying MEK-based cements.	10:40 am to 1:30 pm	3.4	??
8/21/91	95	PBZ	Cement Spray Room	Spraying MEK-based cements.	1:30 pm to 2:45 pm	1.5	??
8/21/91	97	PBZ	"New" Cement Spray Room	Alternates spraying MEK-based cements and latex coatings. Uses two different spray booths.	1:19 pm to 2:51 pm	1.8	??
8/21/91	98	AREA	Cement Spray Room	Area sample collected within the cement spray room	11:42 am to 2:42 pm	3.6	??

Evaluation Criteria	NIOSH Recommended Exposure Limit	??
	OSHA Permissible Exposure Limit	??
	ACGIH Threshold Limit Value	??

Comments:

1. TWA = time-weighted average
2. STEL = 15-minute short-term exposure level

TABLE 9
RESULTS FROM PERSONAL BREATHING ZONE AND GENERAL AREA AIR SAMPLES FOR 1,1,1-trichloroethane
HETA 90-246
Amfuel, Magnolia, Arkansas

DATE	SAMPLE No.	SAMPLE TYPE	DEPARTMENT	ACTIVITY	TIME PERIOD SAMPLED	SAMPLE VOLUME (LITERS)	CONCENTRATION (PPM)
8/20/91	2	PBZ	Final Finish	F-16A. Cleaning the interior of the cell. Two blowers in use. Two employees inside cell. Table #12	8:03 am to 8:19 am	0.8	??
8/20/91	3	PBZ	Final Finish	F-16A. Cleaning the interior of the cell. Two blowers in use. Two employees inside cell. Table #12	8:19 am to 8:36 am	0.9	??
8/20/91	5	PBZ	Final Finish	F-16A. Finished cleaning the interior of the cell at 9:05 am. Two employees inside cell. Table #12	8:36 am to 9:10 am	1.7	??
8/20/91	6	PBZ	Final Finish	KC-135. Wiping and painting the exterior of the cell (forward section). Two employees. Table #26	7:29 am to 9:24 am	2.3	??
8/20/91	7	PBZ	Final Finish	A6 (Aft fuel cell). Working inside the fuel cell during this sampling period.	7:29 am to 9:23 am	2.3	??
8/20/91	9	PBZ	Final Finish	KC-135. Interior cleaning until approximately 9:30 am. Table #22	7:48 am to 9:32 am	2.1	??
8/20/91	11	PBZ	Final Finish	F-18 (#2 cell). Working on the exterior/interior of the cell. Table #20	10:36 am to 10:55 am	1.0	??
8/20/91	16	PBZ	Final Finish	F-18 (#2 cell). Working on the exterior/interior of the cell. Table #20	10:55 am to 11:25 am	1.5	??
8/20/91	17	PBZ	Final Finish	F-16 (A model). Cleaning outside of the cell. Table #16	11:25 am to 11:40 am	0.8	??
8/20/91	18	PBZ	Final Finish	F-16 (A model). Cleaning outside of the cell. Table #16	11:40 am to 11:55 am	0.8	??
8/20/91	19	PBZ	Final Finish	A6 (aft cell). Cleaning the interior of the fuel cell. Table #5	9:24 am to 12:42 pm	4.0	??
8/20/91	20	PBZ	Final Finish	KC-135. Interior cleaning until approximately 9:30 am. On break from 9:32 am to 9:45 am. Table #22	9:46 am to 12:55 pm	3.8	??
8/20/91	21	Area	Final Finish	On Table #13	9:42 am to 12:59 pm	9.9	??
8/20/91	22	PBZ	Final Finish	A6 (Aft fuel cell) and F-15 cell. Involved in cleaning both cells during this sampling period.	9:23 am to 1:03 pm	4.4	??
8/20/91	24	PBZ	Final Finish	KC-135. Cleaning the interior (forward) portion of the fuel cell. Two workers assigned to cell. Table #26.	12:44 pm to 1:12 pm	1.4	??
8/20/91	27	PBZ	Final Finish	KC-135. Cleaning the interior (forward) portion of the fuel cell. A series of consecutive samples were collected at this location. Table #26.	1:12 pm to 1:58 pm	2.3	??

TABLE 9 (continued)
RESULTS FROM PERSONAL BREATHING ZONE AND GENERAL AREA AIR SAMPLES FOR 1,1,1-trichloroethane
HETA 90-246
Amfuel, Magnolia, Arkansas

DATE	SAMPLE No.	SAMPLE TYPE	DEPARTMENT	ACTIVITY	TIME PERIOD SAMPLED	SAMPLE VOLUME (LITERS)	CONCENTRATION (PPM)
8/20/91	29	PBZ	Final Finish	KC-135. Finished cleaning the interior (forward) portion of the fuel cell around 2:30 pm. Table #26.	1:58 pm to 2:35 pm	1.9	??
8/20/91	31	Area	Final Finish	On Table #13.	12:59 pm to 3:18 pm	7.0	??
8/20/91	33	PBZ	Final Finish	F-16(A). Cleaning the interior of the fuel cell. Table #12.	1:47 pm to 3:42 pm	2.3	??
8/20/91	34	PBZ	Final Finish	KC-135. Cleaning the interior (forward) portion of the fuel cell. Table #26	12:42 pm to 3:49 pm	3.7	??
8/20/91	38	PBZ	Final Finish	F-18 (#4 cell). Stenciling inside the fuel cell. No respirator worn.	12:55 pm to 4:06 pm	3.8	??
8/20/91	39	PBZ	Final Finish	F-15 (300-1). Cleaning the interior of the cell. Employee placed head and arms inside the cell during cleaning process. No respirator worn by the worker during this cleaning process since only their head was inside the fuel cell.	1:02 pm to 4:14 pm	3.8	??
8/20/91	41	PBZ	Final Finish	Table #26. Finished cleaning of a KC-135 cell at 2:30 pm	2:35 pm to 4:16 pm	5.1	??

Evaluation Criteria	NIOSH Recommended Exposure Limit	??
	OSHA Permissible Exposure Limit	??
	ACGIH Threshold Limit Value	??

TABLE 10
RESULTS FROM AIR SAMPLES FOR ETHANOL
HETA 90-246
Amfuel, Magnolia, Arkansas

DATE	SAMPLE No.	OPERATION	TIME PERIOD SAMPLED	SAMPLE VOLUME (LITERS)	CONCENTRATION (PPM)
8/21/91	49	Nylon sprayer	0739 to 0945	6.3	??
8/21/91	56	Nylon sprayer	0945 to 1102	3.9	??
8/21/91	94	Nylon sprayer	1105 to 1616	15.6	??
Evaluation Criteria		NIOSH Recommended Exposure Limit			??
		OSHA Permissible Exposure Limit			??
		ACGIH Threshold Limit Value			??

TABLE 11
Results of Heat Stress Monitoring (°F)
American Fuel Cell and Coated Fabrics Company
Magnolia, Arkansas
August 20, 1991
HETA 90-246

Time	Wet Bulb	Dry Bulb	Globe Temp.	$WBGT_{in}$	$WBGT_{out}$
		System 2 (Uniroyal)			
0940	72.9	89.4	90.4	78.1	----
1050	71.9	91.1	92.3	78.1	----
1240	73.0	95.3	96.4	80.0	----
1400	74.4	97.0	98.2	81.5	----
		Finish Area, Table #5 (outside cell)			
0935	72.6	89.1	90.0	77.9	----
1045	71.4	89.5	90.3	77.1	----
1230	72.0	93.4	94.2	78.6	----
1355	73.7	95.8	96.3	80.5	----
		Finish Area, Table #5 (inside cell)			
0930	73.7	89.4	90.0	78.6	----
		Outerply (old building)			
0945	71.3	87.6	88.2	76.6	----
1105	71.3	90.6	90.1	77.0	----
1245	72.4	93.6	94.7	79.0	----
1405	73.4	95.0	96.4	80.2	----
		Inner Liner (new building, near drying table)			
0955	70.9	87.2	88.1	76.0	----
1115	70.7	90.3	90.1	76.5	----
1255	71.6	93.4	94.1	78.3	----
1415	73.1	96.2	96.8	80.2	----
		Tab Area (near pre-shrink oven)			
1000	71.9	89.3	90.2	77.2	----
1120	70.9	90.4	90.9	76.9	----
1300	72.6	96.0	97.3	79.8	----
1425	73.9	98.0	99.0	81.3	----
		Fittings Department (buffing and finishing)			
1010	70.0	84.9	85.9	74.9	----
1125	69.9	87.2	88.4	75.4	----
1305	70.9	90.6	92.3	77.5	----
1430	72.4	91.7	94.2	78.9	----
		Fittings Department (press area)			
1015	71.6	91.1	91.3	77.6	----
1130	71.6	94.9	96.1	79.1	----
1310	73.4	96.8	96.7	80.3	----
1435	75.1	100.7	101.4	83.0	----
		Face Coating Department			
1020	71.2	89.7	92.0	77.4	----
1140	72.4	93.4	96.3	79.5	----
1320	74.6	98.4	100.0	82.4	----
1445	73.8	96.5	100.3	81.7	----
		Outside (between new building and cement house)			
1005	70.6	86.0	108.2	----	79.6
1145	72.8	92.6	120.5	----	83.8
1325	74.4	96.8	122.0	----	86.3
1450	74.4	96.4	116.4	----	84.8

Table 12

Results From Personal Heat Stress Dosimetry
Amfuel, Magnolia, Arkansas
HETA 90-246

Time	Ear Temperature		Mold Temperature	
	°C	°F	°C	°F
07:19	34.8	94.6	30.8	87.4
07:24	36.8	98.3	30.7	87.2
07:29	36.9	98.4	30.5	86.9
07:34	36.8	98.3	29.9	85.8
07:39	37.0	98.6	30.2	86.3
07:44	37.0	98.6	30.2	86.4
07:49	36.9	98.4	29.9	85.8
07:54	36.9	98.4	29.6	85.3
07:59	36.9	98.4	29.8	85.7
08:04	36.9	98.4	30.0	86.0
08:09	36.8	98.3	30.0	86.0
08:14	36.8	98.3	30.0	86.0
08:19	36.7	98.1	30.0	85.9
08:24	36.8	98.3	30.0	86.0
08:29	36.7	98.1	30.1	86.1
08:34	36.7	98.1	30.4	86.7
08:39	36.8	98.3	30.8	87.4
08:44	36.7	98.1	31.2	88.1
08:49	36.8	98.3	31.3	88.3
08:54	36.8	98.3	31.5	88.7
08:59	36.9	98.4	31.8	89.2
09:04	37.0	98.6	32.1	89.8
09:09	37.0	98.6	32.2	90.0
09:14	37.1	98.8	32.4	90.4
09:19	37.1	98.8	32.6	90.8
09:24	37.1	98.8	32.6	90.8
09:29	37.1	98.8	32.7	90.9
09:34	36.8	98.3	31.9	89.4
09:39	36.7	98.1	29.1	84.4
09:44	36.8	98.3	30.2	86.4
09:49	36.8	98.3	31.5	88.7
09:54	36.9	98.4	31.8	89.2

Comments:

Start Time: 7:19 am

End Time: 9:58 am
Total Run Time: 2:38:40
Alarm Level Setting: 39.0°C
Sample Rate: 5 minutes
High Temperature 37.2°C (at 9:22 am)
Low Temperature: 34.7°C (at 9:58 am)

Appendix A
Elements of a Comprehensive Heat Stress Management Program
HETA 90-246
Amfuel, Magnolia, Arkansas

1. **Written program** - A detailed written document is necessary to specifically describe the company procedures and policies in regards to heat management. The input from management, technical experts, physician(s), labor union, and the affected employees should be considered when developing the heat management program. This program can only be effective with the full support of plant management.

2. **Environmental monitoring** - In order to determine which employees should be included in the heat management program, monitoring the environmental conditions is essential. Environmental monitoring also allows one to determine the severity of the heat stress potential during normal operations and during heat alert periods.

3. **Medical examinations and policies** - Preplacement and periodic medical examinations should be provided to all employees included in the heat management program where the work load is heavy or the environmental exposures are extreme. Periodic exams should be conducted at least annually, ideally immediately prior to the hot season (if applicable). The examination should include a comprehensive work and medical history with special emphasis on any suspected previous heat illness or intolerance. Organ systems of particular concern include the skin, liver, kidney, nervous, respiratory, and circulatory systems. Written medical policies should be established which clearly describe specific predisposing conditions that cause the employee to be at higher risk of a heat stress disorder, and the limitations and/or protective measures implemented in such cases.

4. **Work schedule modifications** - The work-rest regime can be altered to reduce the heat stress potential. Shortening the duration of work in the heat exposure area and utilizing more frequent rest periods reduces heat stress by decreasing the metabolic heat production and by providing additional recovery time for excessive body heat to dissipate. Naturally, rest periods should be spent in cool locations (preferably air conditioned spaces) with sufficient air movement for the most effective cooling. Allowing the worker to self-limit their exposure on the basis of signs and symptoms of heat strain is especially protective since the worker is usually capable of determining their individual tolerance to heat. However, there is a danger that under certain conditions, a worker may not exercise proper judgement and experience a heat-induced illness or accident.

5. **Acclimatization** - Acclimatization refers to a series of physiological and psychological adjustments that occur which allow one to have increased heat tolerance after continued and prolonged exposure to hot environmental conditions. Special attention must be given when administering work schedules during the beginning of the heat season, after long weekends or vacations, for new or temporary employees, or for those workers who may otherwise be unacclimatized because of their increased risk of a heat-induced accident or illness. These employees should have reduced work loads (and heat exposure durations) which are gradually increased until acclimatization has been achieved (usually within 4 or 5 days).

6. **Clothing** - Clothing can be used to control heat stress. Workers should wear clothing which permits maximum evaporation of perspiration, and a minimum of perspiration run-off which does not provide heat loss, (although it still depletes the body of salt and water). For extreme conditions, the use of personal protective clothing such as a radiant reflective clothing, and torso cooling vests should be considered.

7. **Buddy system** - No worker should be allowed to work in designated hot areas without another person present. A buddy system allows workers to observe fellow workers during their normal job duties for early signs and symptoms of heat intolerance such as weakness, unsteady gait, irritability, disorientation, skin color changes, or general malaise, and would provide a quicker response to a heat-induced incident.

8. **Drinking water** - An adequate amount of cool (50-60°F) potable water should be supplied within the immediate vicinity of the heat exposure area as well as the resting location(s). Workers who are exposed to hot environments are encouraged to drink a cup (approximately 5-7 ounces) every 15-20 minutes even in the absence of thirst.

9. **Posting** - Dangerous heat stress areas (especially those requiring the use of personal protective clothing or equipment) should be posted in readily visible locations along the perimeter entrances. The information on the warning sign should include the hazardous effects of heat stress, the required protective gear for entry, and the emergency measures for addressing a heat disorder.

10. **Heat alert policies** - A heat alert policy should be implemented which may impose restrictions on exposure durations (or otherwise control heat exposure) when the National Weather Service forecasts that a heat wave is likely to occur. A heat wave is indicated when daily maximum temperature exceeds 95°F or when the daily maximum temperature exceeds 90°F and is at least 9°F more than the maximum reached on the preceding days.

11. **Emergency contingency procedures** - Well planned contingency procedures should be established in writing and followed during times of a

heat stress emergency. These procedures should address initial rescue efforts, first aid procedures, victim transport, medical facility/service arrangements, and emergency contacts. Specific individuals (and alternatives) should be assigned a function within the scope of the contingency plan. Everyone involved must memorize their role and responsibilities since response time is critical during a heat stress emergency.

12. **Employee education and training** - All employees included in the heat management program or emergency contingency procedures should receive periodic training regarding the hazards of heat stress, signs and symptoms of heat-induce illnesses, first aid procedures, precautionary measures, and other details of the heat management program.

13. **Assessment of program performance and surveillance of heat-induced incidents** - In order to identify deficiencies with the heat management program a periodic review is warranted. Input from the workers affected by the program is necessary for the evaluation of the program to be effective. Identification and analysis of the circumstances pertinent to any heat-induce accident or illness is also crucial for correcting program deficiencies.

Appendix B
Selected Local Exhaust Ventilation Designs

Source:
Industrial Ventilation Manual, 19th Edition
American Conference of Governmental Industrial Hygienists

Figure 1- NIOSH Recommended Exposure Limits

Heat Acclimatized Workers

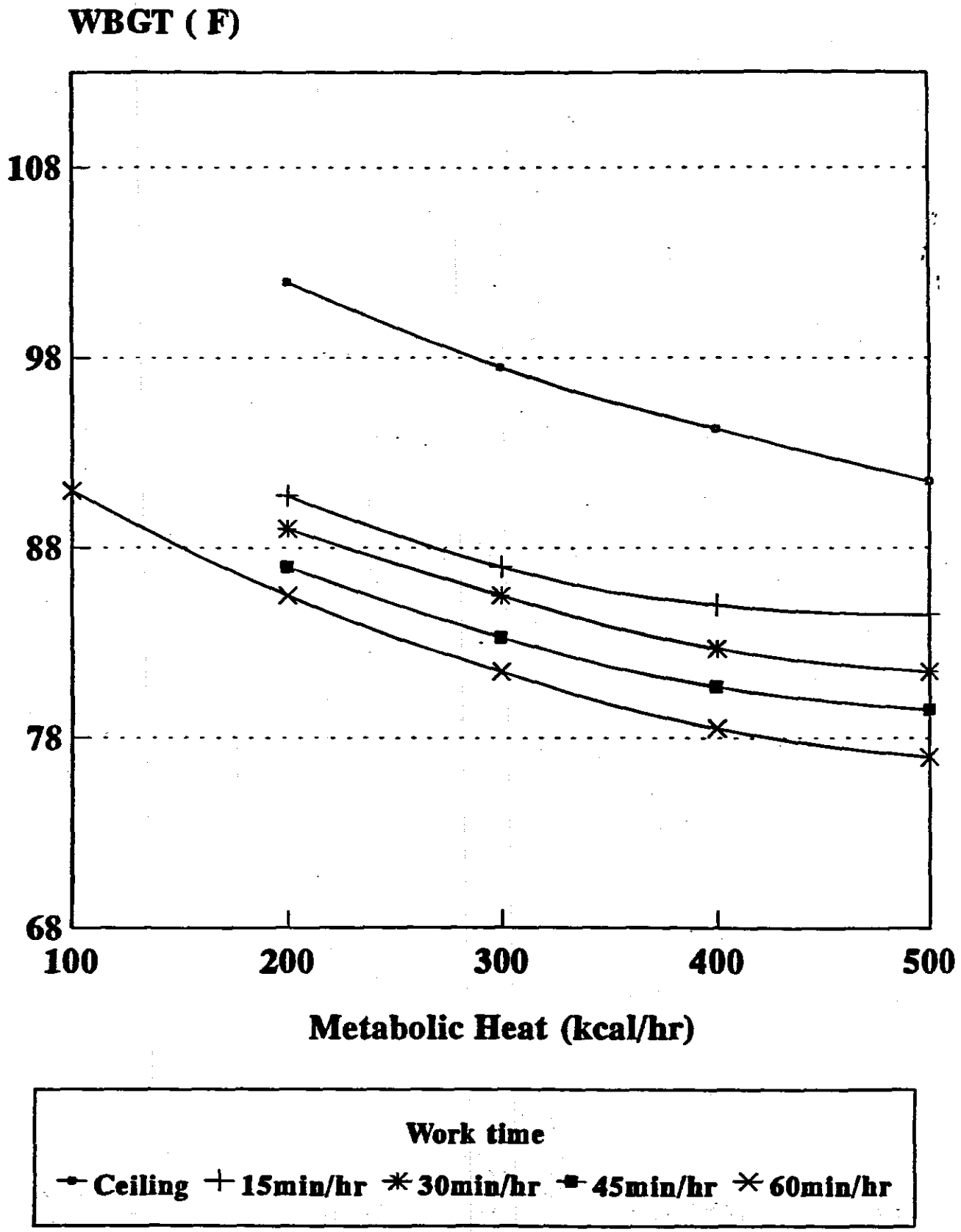

Figure 2: Medical Interview Data

Amfuel Corporation, HETA #90-246

November 14, 1990

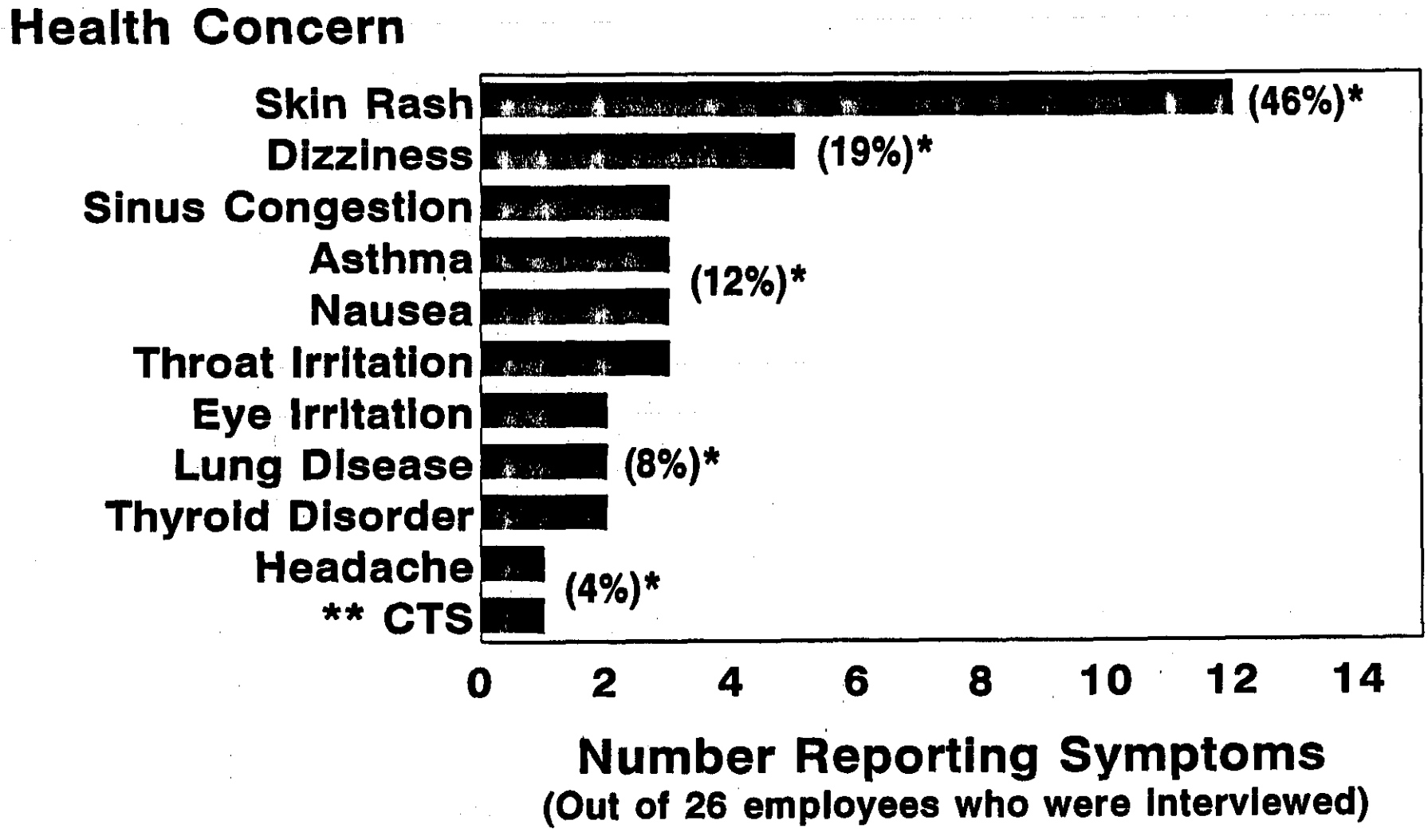

Comments:

* Percent of the 26 interviewed who reported the symptom

** Carpal Tunnel Syndrome

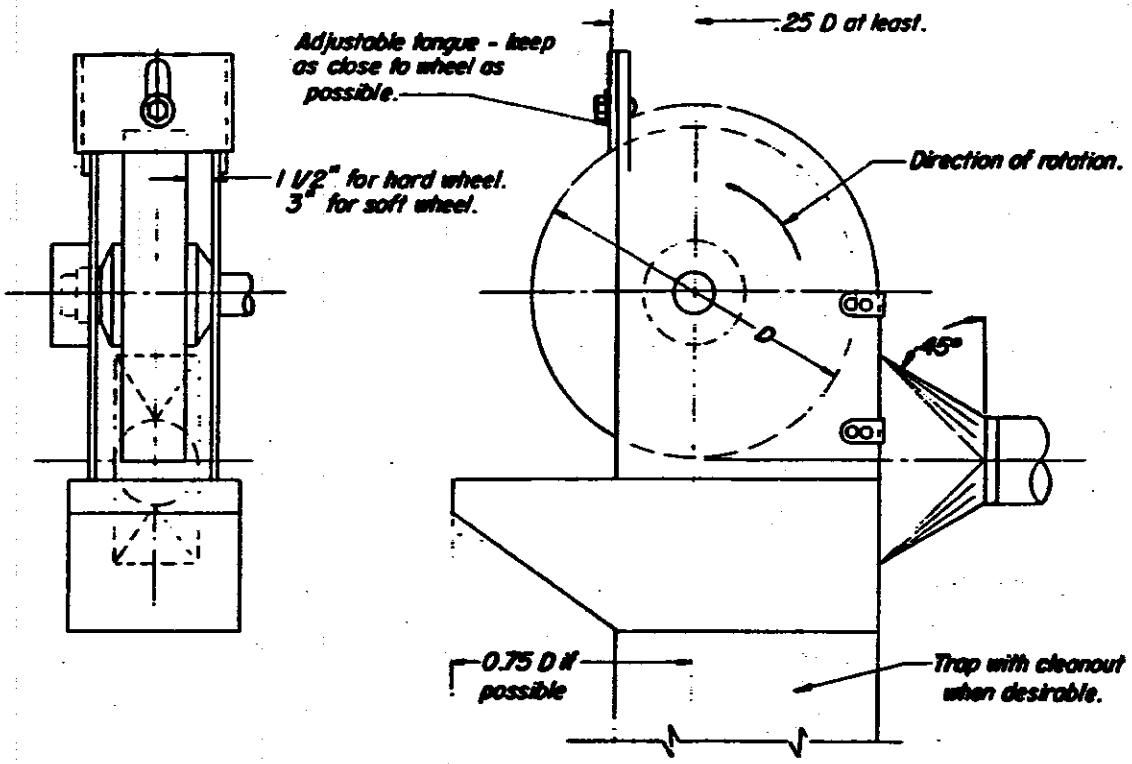

Minimum duct velocity : 3500 fpm

Entry loss : 0.65 VP for straight take-off.
0.40 VP for tapered take-off.

Wheel diam. inches	Wheel width * inches	Exhaust volume cfm	Exhaust volume cfm
		Good enclosure	Poor enclosure
to 9	2	300	400
over 9 to 16	3	500	610
over 16 to 19	4	610	740
over 19 to 24	5	740	1200
over 24 to 30	6	1040	1500
over 30 to 36	6	1200	1990

* In cases of extra wide wheels, use wheel width to determine exhaust volume.

AMERICAN CONFERENCE OF GOVERNMENTAL INDUSTRIAL HYGIENISTS

BUFFING AND POLISHING

DATE 1-82 | VS-406

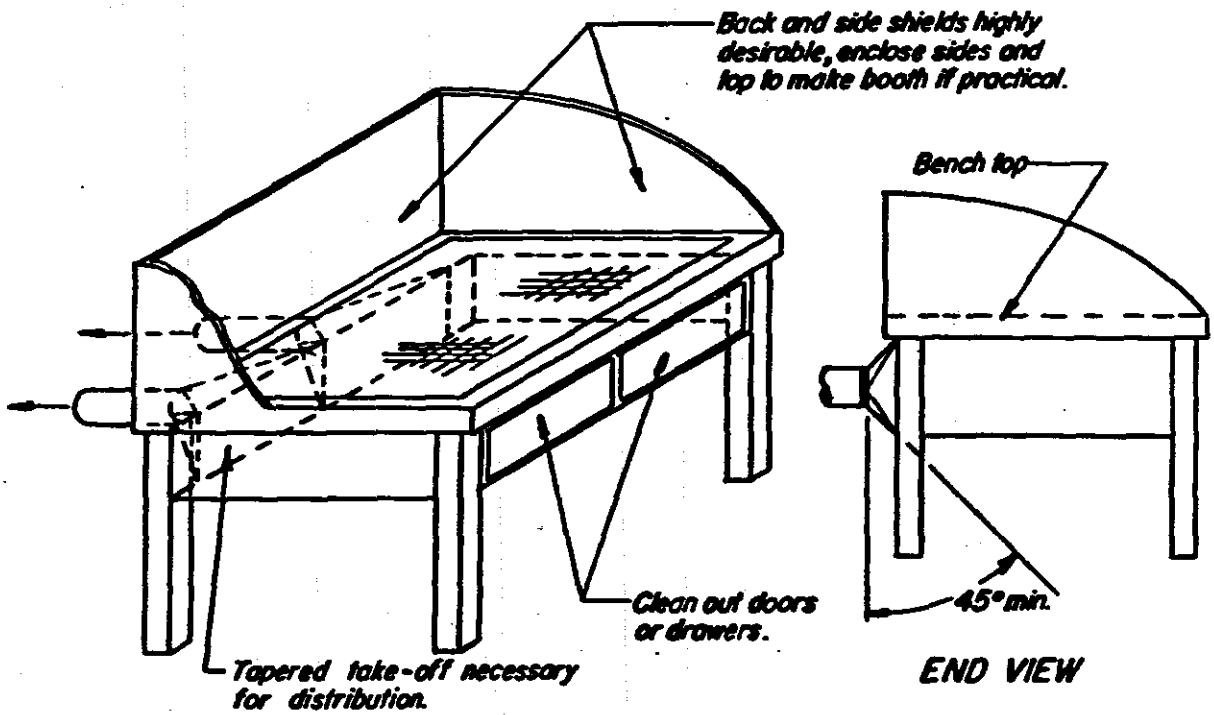

Q = 150 - 250 cfm / sq ft of bench area.
Minimum duct velocity = 3500 fpm
Entry loss = 0.25 VP for tapered take-off.

Grinding in booth, 100 fpm face velocity also suitable.

For downdraft grilles in floor: Q = 100 cfm / sq ft of working area.

Provide equal distribution. Provide for cleanout.

AMERICAN CONFERENCE OF GOVERNMENTAL INDUSTRIAL HYGIENISTS	
PORTABLE HAND GRINDING	
DATE 1-64	VS-412

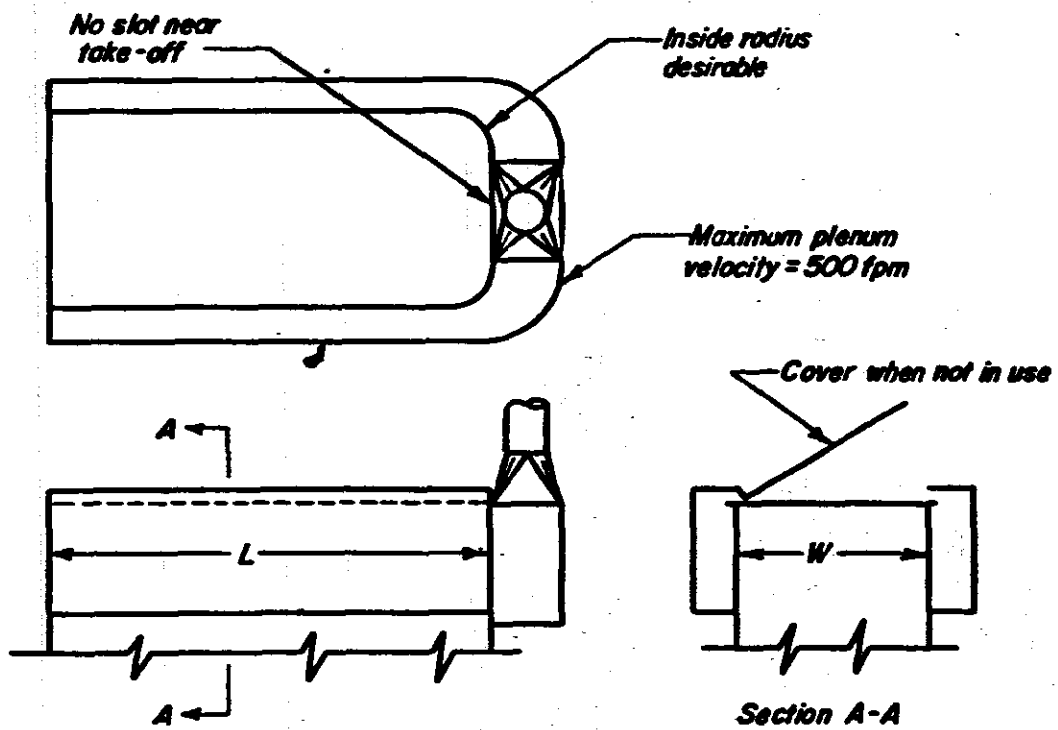

Q = 50LW
Slot velocity = 1000 fpm maximum
Entry loss = 1.78 slot VP + 0.25 duct VP
Duct velocity = 2500-3000 fpm

Also provide: 1. Separate flue for combustion products if direct-fired unit.
2. For cleaning operation, an air-line respirator is necessary.
3. For pit units, the pit should be mechanically ventilated.
4. For further safe guards, see VS-501.1
NOTE: Provide downdraft grille for parts that cannot be removed dry; Q = 50 cfm/sq ft grille area.

AMERICAN CONFERENCE OF GOVERNMENTAL INDUSTRIAL HYGIENISTS	
SOLVENT DEGREASING TANKS	
DATE 1-78	VS-501

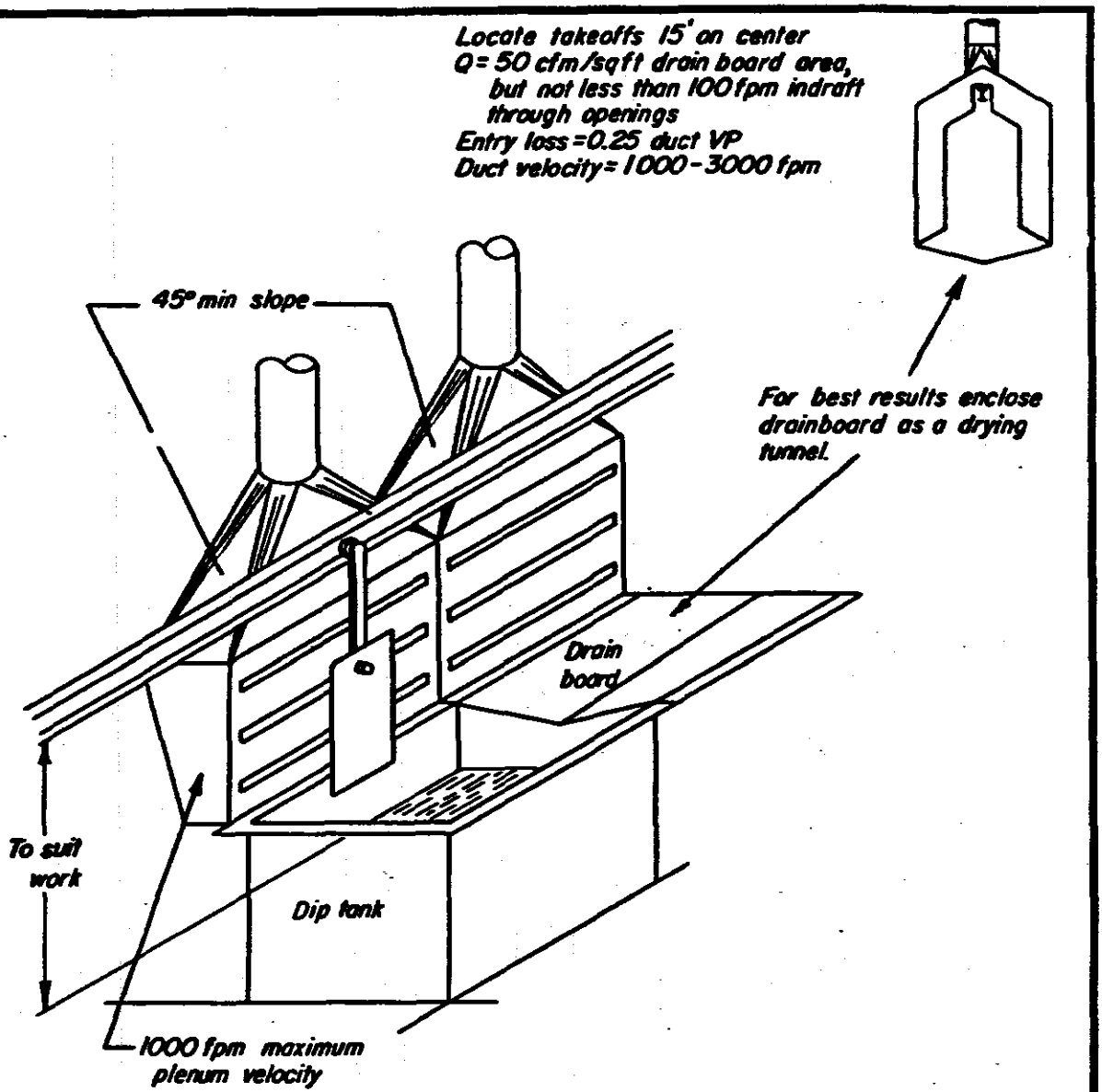

Q = 125 cfm/sq ft of tank and drainboard area
Slot velocity = 2000 fpm
Entry loss = 1.78 slot VP + 0.25 duct VP
Duct velocity = 1 000 - 3000 fpm

NOTE: For details on drying oven, See VS-602

For air drying in a room or enclosure, see Section 2 for dilution ventilation required.

For construction and safety, consult NFPA.[113]

AMERICAN CONFERENCE OF GOVERNMENTAL INDUSTRIAL HYGIENISTS

DIP TANK

DATE 1-78 | VS-502

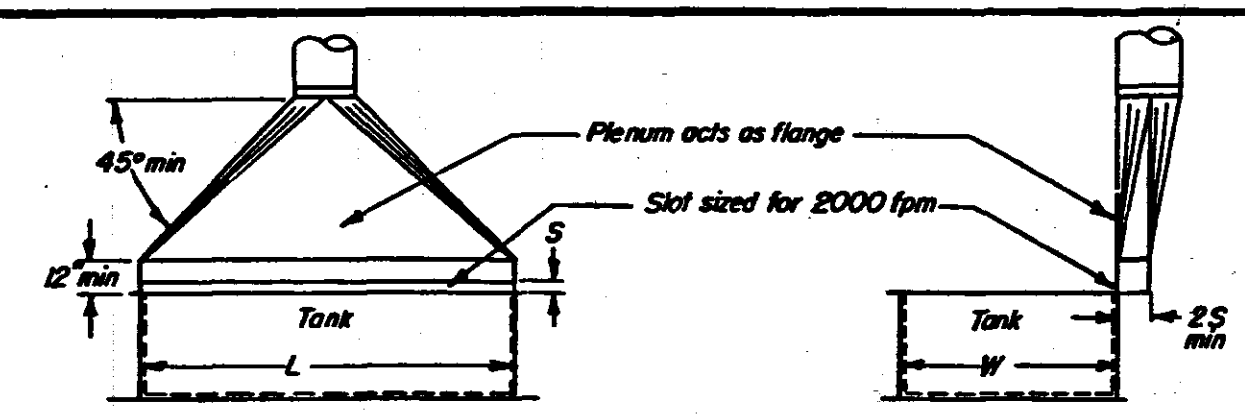

A. UPWARD PLENUM

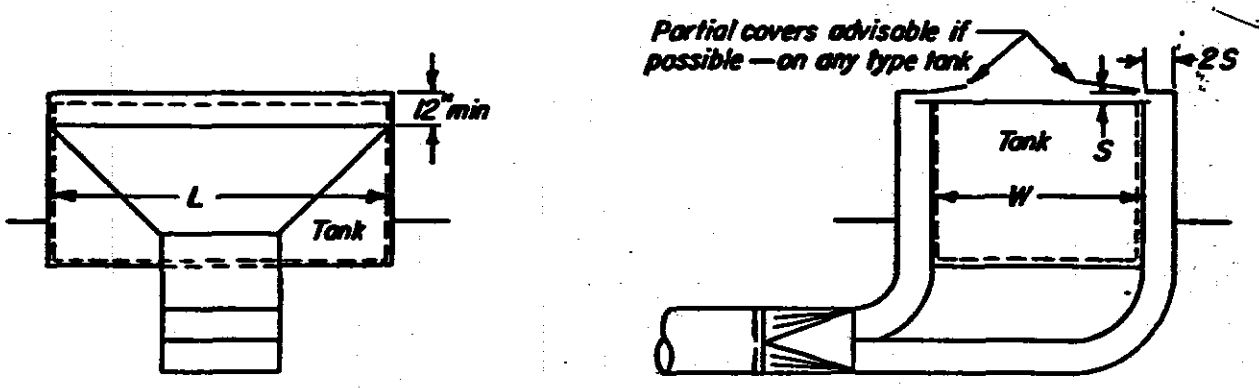

B. DOWNWARD PLENUM

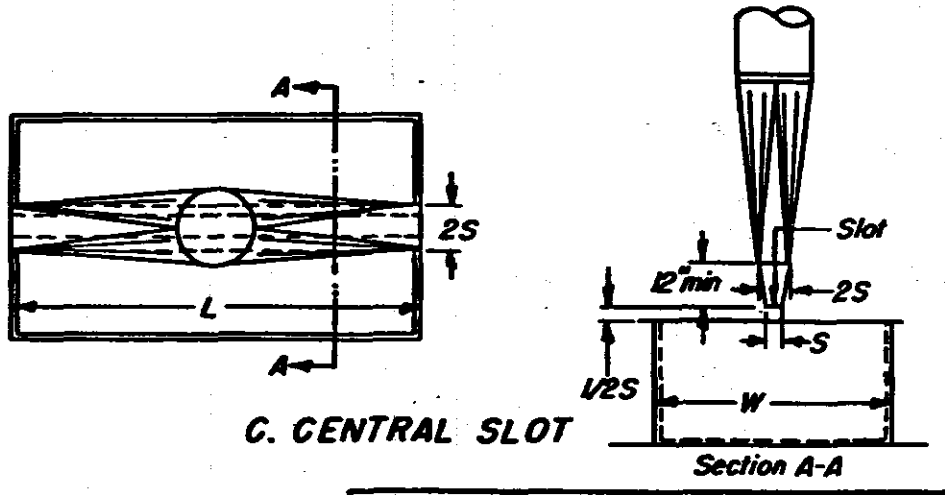

C. CENTRAL SLOT

AMERICAN CONFERENCE OF GOVERNMENTAL INDUSTRIAL HYGIENISTS	
OPEN SURFACE TANKS	
DATE 1-64	VS-503

SEE NOTICE OF INTENDED CHANGE

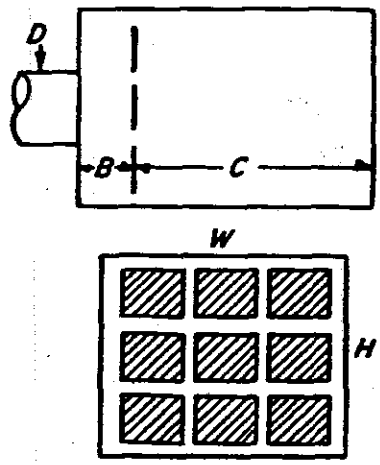

1. Split Baffle or Filters
   B = 0.75 D
   Baffle area = 0.75 WH
   For filter area, See Note 2

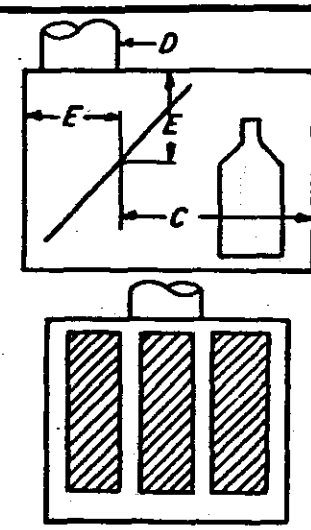

2. Angular Baffle
   E = D + 6"
   Baffle area = 0.40WH
   For filter area, See Note 2

Air spray paint design data

Any combination of duct connections and baffles may be used. Large, deep booths do not require baffles. Consult manufactures for water-curtain designs. Use explosion proof fixtures and non-sparking fan. Electrostatic spray booth requires automatic high-voltage disconnects for conveyor failure, fan failure or grounding.

Walk-in booth
- W = work size + 6'
- H = work size + 3' (minimum = 7')
- C = work size + 6'
- Q = 100 cfm/sq ft booth cross section
  May be 75 cfm/sq ft for very large, deep, booth. Operator may require a NIOSH certified respirator.

Operator outside booth
- W = work size + 2'
- H = work size + 2'
- C = 0.75 x larger front dimension
- Q = 100-150 cfm/sq ft of open area, including conveyor openings.

Entry loss = Baffles: 1.78 slot VP + 0.50 duct VP
= Filters: Dirty filter resistance + 0.50 duct VP

Duct velocity = 1000-2000 fpm

Airless spray paint design

Q = 60 cfm/sq ft booth cross section, walk-in booth
= 60-100 cfm/sq ft of total open area, operator outside of booth

Notes:
1. Baffle arrangements shown are for air distribution only.
2. Paint arresting filters usually selected for 100-500 fpm, consult manufacturer for specific details.
3. For construction and safety, consult NFPA (113)

AMERICAN CONFERENCE OF GOVERNMENTAL INDUSTRIAL HYGIENISTS

LARGE PAINT BOOTH

DATE 1-86 | VS-603

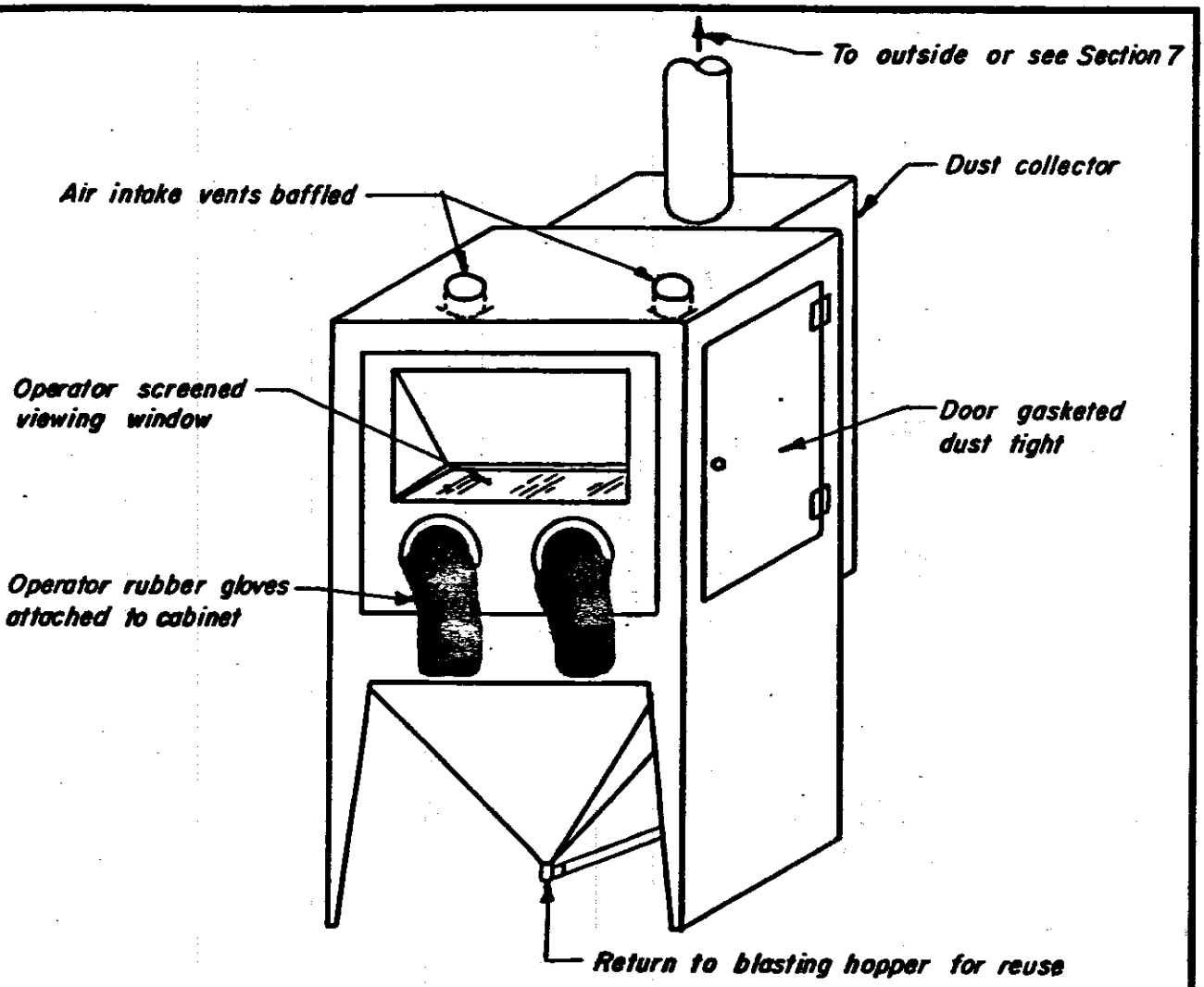

20 air changes per minute
At least 500 fpm inward velocity at all openings
Entry loss = 1 VP plus collector

AMERICAN CONFERENCE OF GOVERNMENTAL INDUSTRIAL HYGIENISTS	
ABRASIVE BLASTING CABINET	
DATE 1-78	VS-101.1

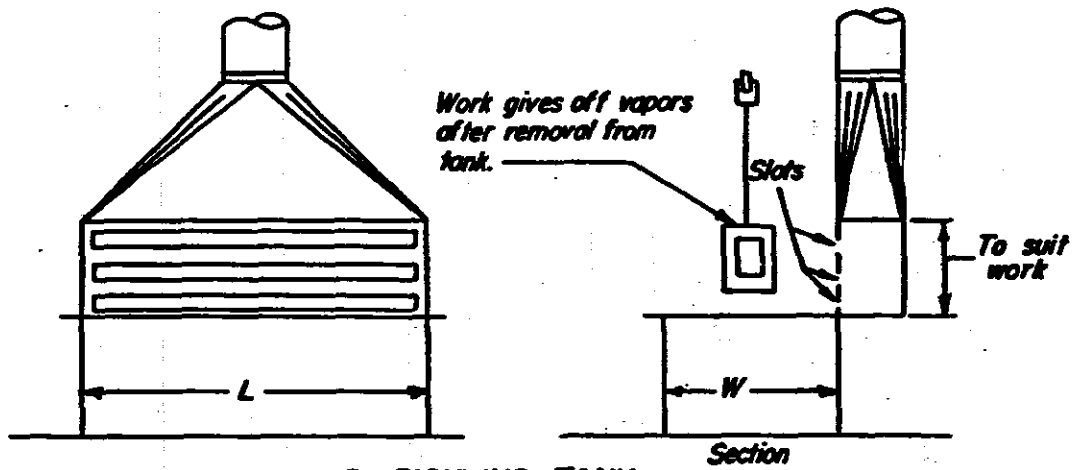

D. PICKLING TANK

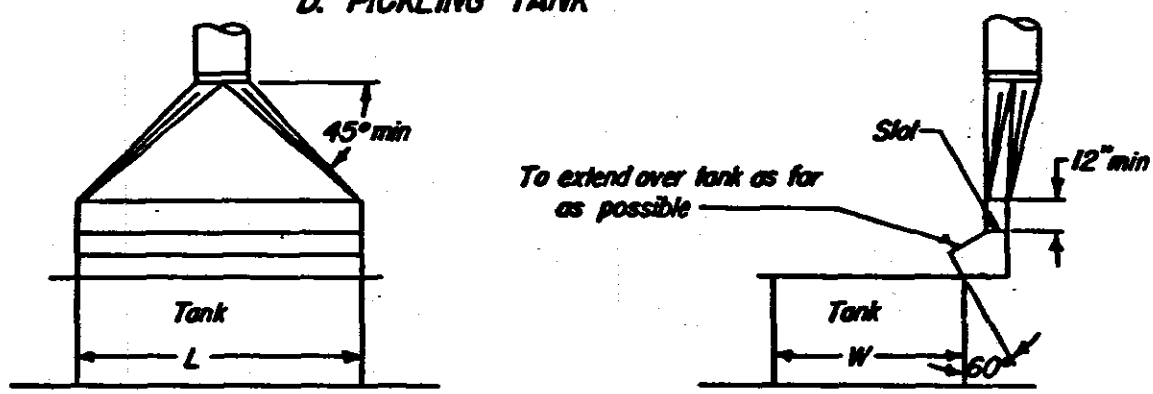

E. SEMI-LATERAL

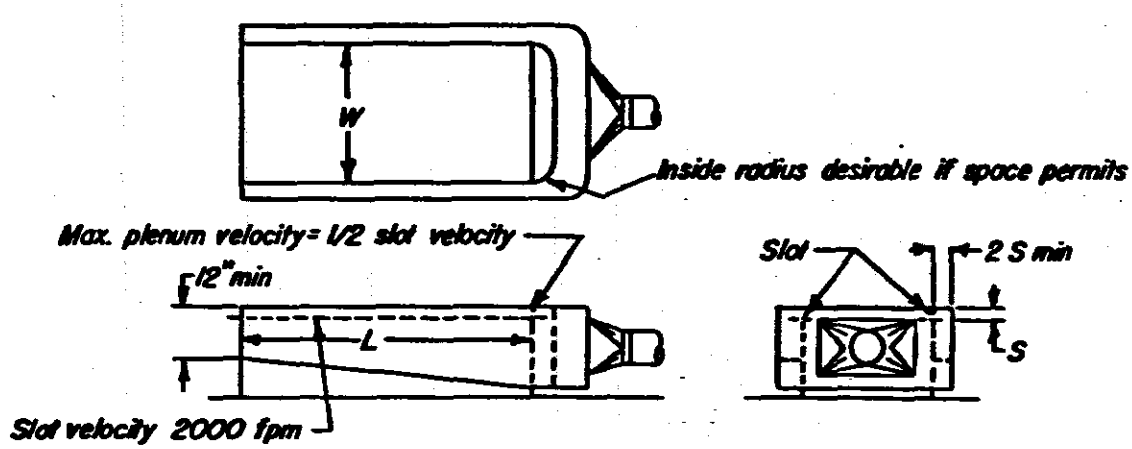

F. END TAKE-OFF

AMERICAN CONFERENCE OF GOVERNMENTAL INDUSTRIAL HYGIENISTS	
OPEN SURFACE TANKS	
DATE 1-66	VS-504

SEE NOTICE OF INTENDED CHANGE