This Health Hazard Evaluation (HHE) report and any recommendations made herein are for the specific facility evaluated and may not be universally applicable. Any recommendations made are not to be considered as final statements of NIOSH policy or of any agency or individual involved. Additional HHE reports are available at http://www.cdc.gov/niosh/hhe/reports

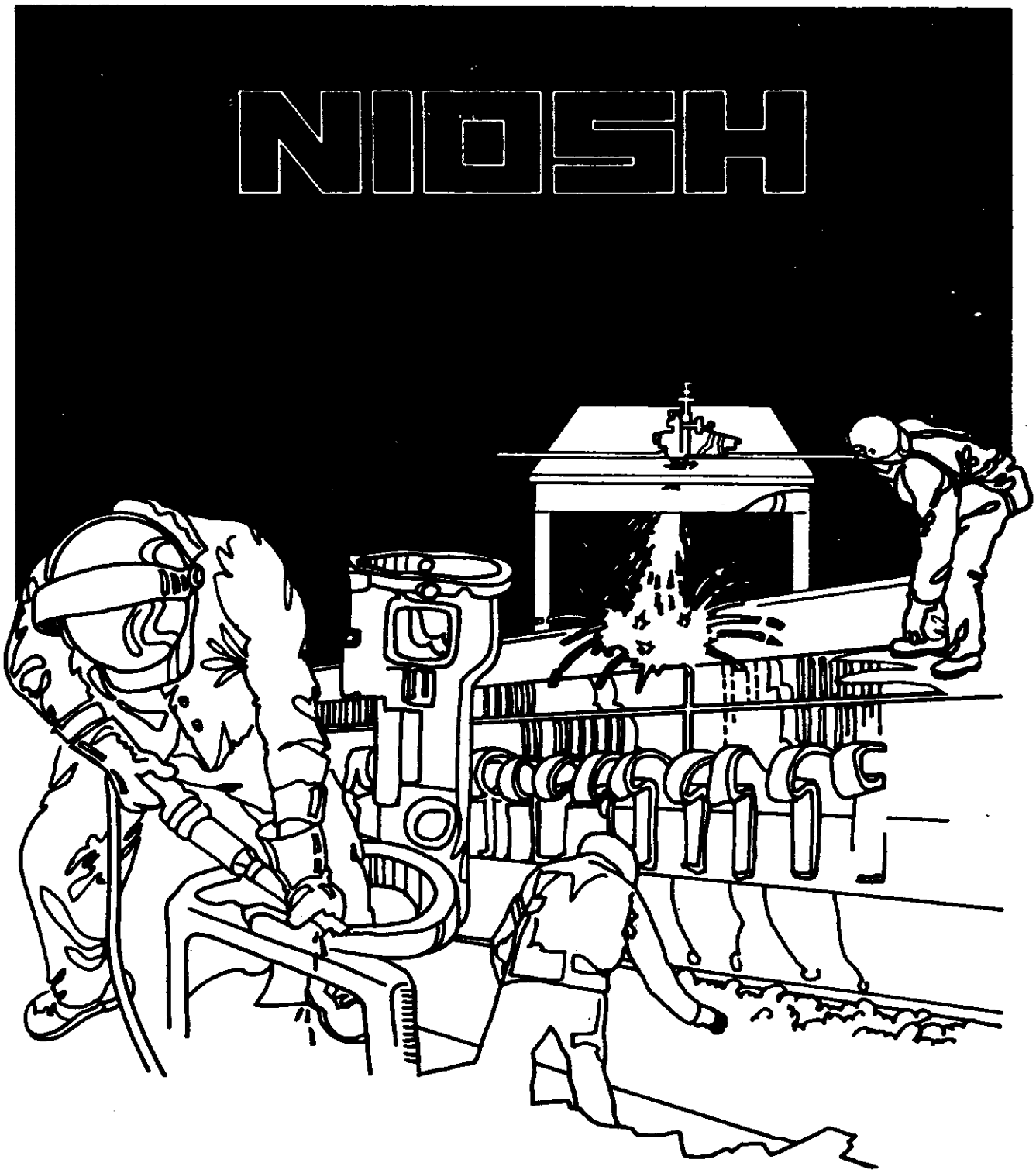

Health Hazard Evaluation Report

HETA 89-052-2006
ALMA AMERICAN LABS
FAIRPLAY, COLORADO

HETA 89-052-2006
JANUARY 1990
ALMA AMERICAN LABS
FAIRPLAY, COLORADO

NIOSH INVESTIGATORS:
Steven A. Lee, CIH
Joseph Goldfield, B.Ch.E., P.E.
Thomas R. Hales, M.D.
Bobby J. Gunter, Ph.D., CIH

I. SUMMARY

In November 1988, the National Institute for Occupational Safety and Health (NIOSH) received a request to evaluate employee exposures to lead at Alma American Labs, Fairplay, Colorado. The company uses lead oxide to extract precious metals from mining samples in a process known as "fire assaying."

In February 1989, NIOSH investigators conducted an environmental and medical survey at the facility. Personal breathing zone (PBZ) and area air samples were collected in the fire assay laboratory to determine concentrations of airborne lead and other trace metals. Selected employees completed a self-administered questionnaire, a medical and occupational history, a limited physical examination, and a blood analysis for blood lead and free erythrocyte protoporphyrin (FEP). In April 1989, NIOSH personnel and a consulting engineer conducted a follow-up visit to develop engineering control recommendations for reducing lead exposure.

Two assay workers had full-shift PBZ air lead concentrations of 120 and 200 ug/M^3. The OSHA permissible exposure limit is 50 ug/M^3. These employees' blood lead levels were 39 and 55 ug/dl, respectively, at the time of this investigation. For workers with blood lead levels over 50 ug/dl, the OSHA lead standard requires employee removal from the lead exposure area and blood lead testing every month until the blood lead level falls below 40 ug/dl. The results of short-term PBZ samples showed that dispensing the flux contributed significantly to employee lead exposure.

On the basis of the data collected during the survey, a health hazard was found to exist from employee exposure to lead in the fire assay operations at Alma American Labs. Recommendations designed to reduce exposures are included in Section VIII of this report.

KEY WORDS: SIC 1041 (Gold Ores), Fire Assay, Gold Assay, Lead, Blood Lead, FEP, ZPP, Litharge

II. INTRODUCTION

In November 1988, NIOSH received a request from Alma American Labs, Fairplay, Colorado, to evaluate employee exposures to lead in the company's fire assay operations.

On February 23, 1989, NIOSH personnel conducted an environmental and medical survey of the facility. The environmental survey included: 1) obtaining background information on operations in the fire assay laboratory, 2) taking air flow measurements of the local exhaust ventilation system, and 3) collecting personal breathing zone and area air samples for lead. The medical component of this study included: 1) a self-administered questionnaire, 2) a medical and occupational history, 3) a limited physical examination, and 4) an analysis of blood lead and free erythrocyte protoporphyrin (FEP). The environmental results and a copy of the OSHA Lead Standard were provided to the company on March 30, 1989. The blood lead and FEP results were reported to participating employees by telephone and mail on April 3, 1989.

On April 11, 1989, NIOSH personnel and a consulting engineer performed a follow-up visit to develop engineering control recommendations for reducing lead exposure.

III. BACKGROUND

A. General Description of Fire Assaying

The fire assaying process separates noble metals, such as gold and silver, from their ores using dry reagents and heat. The process, which can be traced back to 2600 B.C., is still used today due to its ability to concentrate minute amounts of precious metals from relatively large ore samples.[1] Despite its long history, the exact chemical reactions involved in the process are not completely understood.

The first step in the fire assay process is "sample preparation". During this step the various ore samples are ground, milled, and crushed to approximately 5 mesh size. The second step is "charge" preparation. "Charges" are prepared in a fireclay crucible by adding dry reagents (flux) to a finely crushed sample of the ore. The dominant reagents used in this operation are lead oxide and wheat flour. Other flux reagents include sodium carbonate, silica, borax, and potassium nitrate in varying concentrations.[1] To extract all the precious metals from each ore sample, the flux's composition needs to be "adjusted" to accommodate the ore's oxidizing, reducing, or neutral characteristics. This delicate process of "adjusting" the flux to accommodate the ore's characteristics makes assaying more of an art than a science.

The third step is called crucible fusion. In this process approximately 24 of the "charged" fire clay crucibles are placed in a furnace. As the temperature reaches approximately 1600°F, the carbon contained in the flour reduces a portion of the lead oxide to lead droplets. These droplets then alloy with the noble metals released from the decomposed ore. The remaining litharge forms silicates and other compounds which mix with the slag produced from the ore. After 44 to 55 minutes, the crucibles are removed from the oven and the molten contents are quickly poured into iron molds. The lead droplets then settle through the slag to form a "button" at the bottom of each mold. After cooling, the slag is broken away from the molds using a small hammer, and the lead buttons containing the noble metals are collected.[1]

The fourth step involves separating the noble metals from the lead by a process called "cupellation". The lead buttons obtained from the crucible fusion are hammered into squares and placed in small containers made from compressed bone ash (cupels). The cupels are reintroduced into the furnace at approximately 1500°F for 60-75 minutes. The lead button oxidizes into molten lead oxide, of which 98.5% is absorbed into the porous cupel, and 1.5% is volatilized.[1] The bone ash cupel absorbs the molten lead oxide, but is impermeable to the noble metals. Thus, when the cupels are removed from the oven, small beads of the noble metals remain in the center of each cupel. These beads are then weighed and further analyzed for their gold and silver content.[1]

B. Description of Company Operations

Alma American Labs operate out of a building comprised of several interconnected rooms. The furnace room contains one crucible fusion furnace and one cupel furnace, a work table to prepare the crucible charges, and a work table for pouring the crucibles into the molds. Adjacent to the furnace room is the sample preparation room where ore samples are milled and the flux is mixed. Other rooms include a reception area, a scale room where the noble metal beads are weighed, and a break room/conference room.

The laboratory has been operating since 1981 and employs six workers: two assayists, one sample preparation employee, one chemist, and two office employees. The litharge is primarily handled by two assayists who take turns preparing the charges and operating the furnaces. The sample preparation employee mills the ore samples in the sample preparation room. The chemist works throughout the building, but spends most of the time in the scale room. The two office employees work in the reception area. The daily workload varies widely, but the lab may analyze up to 80 ore samples per day. Figure I shows the flow sheet for the Fire Assay Department.

C. Personal Protection, Administrative and Engineering Controls

Personal protective equipment worn by the employees when in the assay laboratory included gloves, face shields, and respirators.

Employees wear disposable dust masks (TC-21C-361) in the furnace rooms while performing the following procedures: preparing charges, removing the crucibles from the furnace, and removing the cupels from the furnace. The respirators are also worn in the sample preparation room during flux mixing and ore milling. The company does not provide coveralls and the employees are responsible for laundering their own clothes. Hand-washing facilities are located in the assay lab; however, there is no shower at the laboratory.

No local exhaust ventilation is provided for controlling lead exposure during the scooping of litharge from the drums, preparing the fluxes, or charging the crucibles. The crucible furnace has a six-inch wide hood above the furnace door, but it was not operating at the time of the NIOSH visit.

IV. MATERIALS AND METHODS

A. Environmental

On February 23, 1989, an environmental survey was conducted to determine employee exposures to lead. During this survey, personal breathing zone (PBZ) air samples were collected near the workers' breathing zone, and general area air samples were collected at locations throughout the assay laboratory. Samples were obtained using battery-powered sampling pumps operating at 2.0 or 3.0 liters of air per minute. The pumps were attached by Tygon tubing to the collection media (37-millimeter, 0.8-micron pore size, mixed-cellulose ester membrane filters contained in 3-piece plastic cassettes).

The samples were analyzed for lead by atomic absorption spectroscopy according to NIOSH method 7082.[2] Air flow measurements of the local exhaust ventilation hoods were taken with a Kurz Model 490 mini-anemometer.

B. Medical

The four assay lab employees (two assayists, one sample preparation employee, and one chemist) and the two front office employees were invited to participate in the study. The study consisted of: 1) a medical and occupational history, 2) an examination of the gums for evidence of lead exposure (Burtonian lead line),[3] 3) a blood sample analyzed for lead and free erythrocyte protoporphyrin (FEP), and 4) a self-administered questionnaire. The questionnaire was designed to gather demographic information and data on symptoms associated with lead poisoning. The blood leads and FEPs were analyzed in a laboratory approved by the Occupational Safety and Health Administration (OSHA), based on proficiency testing, for blood lead analysis.[4] Blood lead concentrations were determined utilizing anodic stripping voltametry, and FEP levels were determined by photofluorometric techniques.[5] The medical and occupational history was obtained and the limited physical examination performed by, a NIOSH physician trained in internal and occupational medicine.

V. EVALUATION CRITERIA

As a guide to the evaluation of the hazards posed by workplace exposures, NIOSH field staff employ environmental evaluation criteria for assessment of a number of chemical and physical agents. These criteria are intended to suggest levels of exposure to which most workers may be exposed up to 10 hours per day, 40 hours per week, for a working lifetime, without experiencing adverse health effects. It is important, however, to note that not all workers will be protected from adverse health effects if their exposures are maintained below these levels. A small percentage may experience adverse health effects because of individual susceptibility, a pre-existing medical condition, and/or a hypersensitivity (allergy).

In addition, some hazardous substances may act in combination with other workplace exposures, the general environment, or with medications or personal habits of the worker to produce health effects even if the occupational exposures are controlled at the level set by the evaluation criterion. These combined effects often are not considered in the evaluation criteria. Also, some substances are absorbed by direct contact with the skin and mucous membranes and, thus, potentially increase the overall exposure. Finally, evaluation criteria may change over the years as new information on the toxic effects of an agent becomes available.

The primary sources of environmental evaluation criteria for the workplace are: 1) NIOSH Criteria Documents and recommendations, 2) the American Conference of Governmental Industrial Hygienists' (ACGIH) Threshold Limit Values (TLVs), and 3) the U.S. Department of Labor/Occupational Safety and Health Administration (OSHA) occupational health standards [Permissible Exposure Limits (PELs)]. A time-weighted average (TWA) exposure refers to the average airborne concentration of a substance during a normal 8- to 10-hour workday.

A brief discussion of the toxicity and evaluation criteria for inorganic lead follows. A summary of the lowest blood levels causing observable effects in adults are listed in Table 1.

A. Toxicological

Inhalation (breathing) of lead dust and fume is the major route of lead exposure in the industrial setting. A secondary source of exposure may be from ingestion (swallowing) of lead dust deposited on food, cigarettes, or other objects. Once absorbed, lead is excreted from the body very slowly. Absorbed lead can damage the kidneys, peripheral and central nervous systems, and blood forming organs (bone marrow). These effects may be manifested as weakness, tiredness, irritability, digestive disturbances, high blood

pressure, kidney damage, cognitive impairment, or slowed reaction times. Chronic lead exposure is associated with infertility and with fetal damage in pregnant women. There is some evidence that lead can also impair fertility in occupationally exposed men.[6]

The blood lead test is one measure of the amount of lead in the body and is the best available measure of recent lead absorption. Adults not exposed to lead at work usually have a blood lead concentration less that 30 ug/dl; the average is less than 15 ug/dl.[7,8] In 1985, the Centers for Disease Control (CDC) recommended 25 ug/dl as the highest acceptable blood level for young children.[9] Since the blood lead concentration of a fetus is similar to that of its mother, and since the fetus's brain is presumed to be at least as sensitive to the effect of lead as a child's, the CDC advised that a pregnant woman's blood lead level be below 25 ug/dl.[9] Recent evidence suggests that the fetus may be adversely affected at blood lead concentrations well below 25 ug/dl.[10] Furthermore, there is evidence to suggest that levels as low as 10.4 ug/dl affect the performance of children on educational attainment tests, and that there is a dose-response relationship with no evidence of threshold or safe level.[11] Aside from fetal effects, lead levels between 40-60 ug/dl in lead-exposed workers indicate excessive absorption of lead and may result in some adverse health effects. Levels of 60-100 ug/dl represent unacceptable elevations which may cause serious adverse health effects. Levels over 100 ug/dl are dangerous and require medical treatment.

Free erythrocyte protoporphyrin (FEP) levels measure the effect of lead on heme synthetase, the last enzyme involved in the process of heme synthesis. FEP levels increase abruptly when blood lead levels reach about 40 ug/dl, and they tend to stay elevated for several months. The FEP can also be elevated as a result of iron deficiency. A normal FEP level is less than 50 ug/dl.[12]

B. <u>Occupational Exposure Criteria</u>

The current OSHA PEL for airborne lead is 50 ug/m^3 calculated as an 8-hour TWA for daily exposure.[13] In addition, the OSHA lead standard establishes an "action level" of 30 ug/m^3 TWA, which initiates several requirements of the standard, including periodic exposure monitoring, medical surveillance, and training and education. For example, if an employer's initial determination shows than any employee may be exposed to more than 30 ug/m^3, air monitoring must be performed every six months until the results show two consecutive levels of less than 30 ug/m^3 (measured at least seven days apart). The standard also dictates that a worker with blood lead levels greater than 60 ug/dl, or averaging more than 50 ug/dl, must be removed from further lead exposure until the blood lead concentration is at or below 40 ug/dl. Removed workers have protection for wages, benefits, and seniority for up to 18 months.[13]

VI. RESULTS AND DISCUSSION

A. Environmental

The two assayists had full-shift PBZ air lead concentrations of 120 and 200 ug/m^3 (Table 2). Short-term sampling showed that tasks contributing substantially to the overall exposure were (1) charging crucibles, (2) busting slag and pounding buttons, (3) unloading cupels, and (4) loading buttons into pre-heated cupels. Full-shift area samples showed that the highest air lead concentrations were in the furnace and crucible charging areas (61 and 48 ug/m^3). Airborne lead was found throughout the rest of the building in concentrations ranging from 6 to 8 ug/m^3.

B. Medical

The blood lead and the FEP levels for the 6 shop employees are listed in Table 3. The blood lead and FEP levels for the 4 assay shop employees were all higher than those of the office participants. (Table 3) One of the 4 assay shop employees had a blood lead level above 40 ug/dl (the level at which the OSHA standard requires monitoring the blood lead every 2 months), and another, an assayist, had a blood lead level above 50 ug/dl (the level at which the OSHA lead standard requires removal from lead exposure). Neither of the 2 office employees had elevated blood lead or FEP levels. (Table 3)

None of the 6 participating employees (4 assay shop and 2 front office) reported symptoms suggestive of lead poisoning. None of the 6 employees had a lead line on their gums.

VII. CONCLUSIONS

The environmental survey revealed lead exposures above the OSHA PEL for the two assayists. One of these two assayists had a blood lead level over 50 ug/dl, the level at which the OSHA lead standard requires removal from lead exposure and blood lead testing every month until the blood lead level falls below 40 ug/dl. No local exhaust ventilation was being used to control lead exposure from any of the processes shown to emit high lead levels. Inadequate respiratory protection, lack of protective clothing, and lack of hygiene facilities may also have contributed to high lead exposure.

VIII. RECOMMENDATIONS

To ensure that workers are adequately protected from the adverse effects of lead, a comprehensive program of prevention and surveillance is needed. The requirements for such a program are clearly presented in the OSHA lead standard.[13] In addition to specifying PELs for airborne exposure, the OSHA lead standard contains specific provisions dealing

with mechanical ventilation, respirator usage, protective clothing, housekeeping, hygiene facilities, employee training, and medical monitoring. The implementation of the provisions of this standard will help to ensure that the employees are protected against potential adverse health effects of lead exposure.

A. Mechanical Ventilation

The efforts to reduce employee exposure to lead below the action level of 30 ug/m^3 must focus on the following areas:

1. Cans of litharge.
2. Two work benches.
3. Two furnaces.
4. Make-up air to the Fire Assay area.

The full cans of litharge should be opened in the vicinity of Work Table I in the Fire Assay area instead of in the Sample Preparation area. The relocation of that operation will avoid the need to carry open coffee cans of litharge between the two locations. Since the litharge cans weigh 100 pounds, it may be impractical to raise the cans to the table top.

Figure II shows a sketch of a hood that can be located next to Work Table I. The hood can be mounted on legs attached to the floor. A half collar at the base of the hood can be used to position a 12" x 12" can of litharge. A coffee can may be inserted into the hood through the 12" x 18" opening above the elevation of the opened can. Using a scoop, the empty coffee can may be filled.

The 1.5 square foot hood opening would require a face velocity of 200 feet per minute (fpm) if it were at sea level. Fairplay is at an elevation of 10,000 feet. Atmospheric pressure is about 20 inches of mercury, in contrast to about 30 inches of mercury at sea level. The ability of air to carry dust and fumes is directly proportional to the air density, which in turn is directly proportional to the air pressure. Thus, the 200 fpm indraft should be corrected for this effect (as must all fans, motors, and duct velocities). Since the carrying ability of air increases as the square of the velocity, the 200 fpm design velocity should be increased by the square root of the density ratio (1.5), or about 1.22. The control velocity should be about 250 fpm and 375 cubic feet of air per minute (CFM) should be exhausted from the hood. A four-inch dust pipe connection, with a duct velocity of about 4500 fpm is required on the hood. The dust pipe must be connected to a dust collector with adequate capacity and suction to deliver the required exhaust. The DCE Vokes dust collector may have the

required capacity, but the requirements of the crushers in the Sample Preparation room must be dealt with first. The DCE Vokes dust collector has insufficient suction to handle a dust piping system. The air-to-cloth ratio recommended by the vendor is too high and should be much more conservatively applied when connected to a local exhaust system carrying significant quantities of dust.

B. Work Table I Ventilation

The work that is now done on Tables I and II must be controlled by adequate ventilation. Also, we propose that the mixing of fluxes and some of the handling of litharge that is now performed in the Sample Preparation area be transferred to the ventilated portion of Work Table I.

The engineering controls described herein assume that the required operations, now performed on Tables I and II, can be restricted to 4-foot-wide portions of each of those two tables. If larger widths are needed, the ventilation requirements must be increased in proportion.

Figure III describes the recommended ventilation for a 4 foot wide section of Work Table I. The 4-foot-wide table area must be enclosed on both sides and on top by sheet metal. We propose that a 12" wide plenum chamber be built in the rear of the enclosure. Air must be exhausted in sufficient quantity so that an indraft of 180 fpm velocity is maintained in the front face of the table enclosure.

At sea level, the recommended control velocity would be 150 fpm. As described before, due to the lower density of air at 10,000 feet elevation, the control velocity should be increased by a factor of 1.22; hence, the recommendation of a control velocity of 180 fpm. Since the enclosure cross-section is 4 feet wide by 3 feet high, 2200 CFM must be exhausted from the plenum chamber.

In order to get good air distribution through the open face of the table enclosure, carefully designed slots in the front face of the chamber are required. If two take-offs can be installed, as shown in Figure III, then 1100 CFM must be exhausted from each. There are two advantages to exhausting from two take-offs and from the base of the plenum. By using two take-offs, lower velocities in the bottom entrance and the vertical sections of the plenum are assured. Connecting to the base of the plenum tends to avoid dust and fume build-up in the base of the plenum.

required capacity, but the requirements of the crushers in the Sample Preparation room must be dealt with first. The DCE Vokes dust collector has insufficient suction to handle a dust piping system. The air-to-cloth ratio recommended by the vendor is too high and should be much more conservatively applied when connected to a local exhaust system carrying significant quantities of dust.

B. Work Table I Ventilation

The work that is now done on Tables I and II must be controlled by adequate ventilation. Also, we propose that the mixing of fluxes and some of the handling of litharge that is now performed in the Sample Preparation area be transferred to the ventilated portion of Work Table I.

The engineering controls described herein assume that the required operations, now performed on Tables I and II, can be restricted to 4-foot-wide portions of each of those two tables. If larger widths are needed, the ventilation requirements must be increased in proportion.

Figure III describes the recommended ventilation for a 4 foot wide section of Work Table I. The 4-foot-wide table area must be enclosed on both sides and on top by sheet metal. We propose that a 12" wide plenum chamber be built in the rear of the enclosure. Air must be exhausted in sufficient quantity so that an indraft of 180 fpm velocity is maintained in the front face of the table enclosure.

At sea level, the recommended control velocity would be 150 fpm. As described before, due to the lower density of air at 10,000 feet elevation, the control velocity should be increased by a factor of 1.22; hence, the recommendation of a control velocity of 180 fpm. Since the enclosure cross-section is 4 feet wide by 3 feet high, 2200 CFM must be exhausted from the plenum chamber.

In order to get good air distribution through the open face of the table enclosure, carefully designed slots in the front face of the chamber are required. If two take-offs can be installed, as shown in Figure III, then 1100 CFM must be exhausted from each. There are two advantages to exhausting from two take-offs and from the base of the plenum. By using two take-offs, lower velocities in the bottom entrance and the vertical sections of the plenum are assured. Connecting to the base of the plenum tends to avoid dust and fume build-up in the base of the plenum.

The velocity of air in the plenum connection is 550 fpm. To get good distribution through the slots in the face of the plenum, velocities three times as high should be used. Therefore, we recommend that four 1-inch slots, uniformly spaced, and 44 inches long be cut in the front face of the plenum chamber. It would be best to attach the front face of the plenum with bolts and wing nuts to allow easier removal for cleaning.

Ducts connected to the plenum should be connected by tapered transition pieces that have 45° sides. The ducts should be designed for a velocity of about 3,000 fpm and follow the specifications in Appendix I.

In the ventilated portion of Work Table I, the litharge can be dispensed into flux cans and the other flux materials added. The mixing drum and its rotating rollers should be moved to this area, and all filling and emptying of the mixer should be done here. Also, the filling, weighing, and mixing of ore samples and flux in the crucibles should be performed in the ventilated portion of Table I.

C. 10A Furnace

The present exhaust above the furnace 10A is inadequate. A hood that extends beyond the furnace walls about eight inches on each side should be installed. Since the furnace is 36" wide by 40" long, the hood should be 52" wide by 56" long. The hood must, of course, be located above the furnace. That location is essential because of the natural tendency of the leaking, hot furnace gases to rise. The hood must taper, at an angle of 45° from each of the sides, to a round duct opening of about 14 inches. A sheet metal skirt, 6"-8" high, should surround the rectangular base of the hood.

An indraft of about 100 fpm velocity must be maintained at the face of this hood. It is not necessary to correct this control velocity for altitude since it is considered to be conservative. The cross-sectional area of the hood is about 20 square feet. The exhaust air requirement is 2000 CFM. The control of oven fumes will be improved if curtains are dropped from the edges of the hood on three sides. These curtains must be made of a temperature-resistant fabric. Cloths made of Teflon that can resist 550°F may be appropriate.

A small hood, about 6 or 8 inches deep, should be installed above the charging door. This hood should extend about 4 inches beyond the charging opening on both sides. 350-400 CFM should be exhausted through the ducts in which about 3,000 fpm velocity is maintained. A separate exhaust fan for this hood will be required because the pressure loss of this small hood system will be larger than that of the large hood.

D. Work Table II

The location of Work Table II is shown in Figure IV. As mentioned previously, the design of the ventilation for this table is described based on the assumption that all the required operations can be performed in an area that is four feet wide. On that basis, the ventilated portion of Work Table II can be enclosed and ventilated as shown in Figure III and previously described for Work Table I.

The filling of molds from hot crucibles, breaking of glass from the cooled conical castings, final pounding of glass from the lead pellets, and final shaping of the lead pellets will all be performed on this ventilated table. The cooling of hot crucibles and the cooling of cupels must also take place in the ventilated portion of the table.

The 8" x 8" anvil must be relocated to a position on this ventilated table. A chute must be provided to a screened opening near the anvil location so that debris and dust accumulating on the table can be swept into the table opening and fall to a bucket below. The chute to the bucket should be about 6" in diameter and run at an angle of 45° to reduce the pumping of air by the falling debris.

The same opening or another one must be installed to accept the dust and debris from the initial glass-pounding operation, which removes glass from the cooled conical casting. If a second table opening must be provided, it should also be connected to the same bucket by a 6" diameter, 45° chute.

A 4" duct, connected to a dust collector, must be connected to the chute system in such a way that it removes a minimum of large material but provides an indraft on the table openings and the covered bucket that receives the debris and dust swept from the table.

E. 2F1 Furnace

The second furnace is 40 inches wide by 30 inches deep. A hood installed above this furnace should extend eight inches beyond each side and, thus, would be 46" x 56". The cross-sectional area would be about 18 square feet and have an exhaust requirement of 1800 CFM. The tapered hood top should reduce to an opening for a 13-inch pipe size. A 6"-8" sheet metal skirt must be attached to the rectangular base of this furnace hood also.

Above this furnace is a mechanism for lifting the front oven door by power. Some ingenuity will be required to design the hood so that the portions of the mechanism and the electrical components that are subject to heat damage are located outside of the hood. Curtains made of Teflon or some other heat-resistant material should be dropped from three sides of this hood.

Another hood, about 6 inches deep, should be mounted on the rising and lowering oven door. This hood should extend four inches on each side beyond the uncovered oven door opening. A 4-inch flexible metal duct connected to this hood should connect to a fan system that exhausts 350 to 400 CFM. The duct manufacturer will have to be consulted as to how long a piece of 4-inch duct is needed to allow for the up and down door movement. If the resultant duct and hood prove to be too heavy for the door lifting mechanism, then a sliding duct connection can be designed for the oven door hood.

F. Make-up Air Requirements

It had been proposed that unheated, make-up air be allowed to leak into the laboratory from an opened garage door in the rear wall. Heat for the air would be provided by the two furnaces. This proposal is impractical for two reasons:

1. The exhaust systems over the two furnaces will exhaust most of the heat generated.

2. The furnaces are rated at 125 amps and 220 volts each. Thus, the power each dissipates is 27.5 kilowatts (KW) per hour. Since a KW is equivalent to the generation of 3413 BTU, the heat evolved by both furnaces is 188,000 BTU/hr, assuming that the power factor is unity and all of the generated heat goes into the space. That amount of heat is sufficient to raise the temperature of the required make-up air by 24°F. That heat rise will not correct conditions during the sub-zero winter temperatures in Fairplay.

3. The requirement for make-up air is as follows:

1.	Ventilate litharge can	375 CFM
2.	Exhaust Table I	2200
3.	10A Furnace large hood	2000
4.	Small door hood	375
5.	Exhaust Table II	2200
6.	Dust Chute	375
7.	2F1 Furnace large hood	1800

8.	Small door hood	375
9.	Geochemical Mineral Acid Hood	600
10.	Geochemical Perchloric Parting Hood	480
11.	Atomic Absorption Spectrophotometer	250
	Total	11030 CFM

Thus, there will be a requirement for an 11000 CFM make-up air unit.

It should be noted that the exhaust requirements of the Geochemical laboratory have been included in the total even though the control of substances in that room have not been included in the engineering study.

A direct-fired gas unit can be used to heat the make-up air. It must be chosen carefully to avoid hazards due to gas system failures and due to the possibility of incomplete gas combustion. The intake will have to be carefully designed to avoid the entry of snow in winter. Noise considerations will preclude units equipped with propellor fans. Backwardly inclined centrifugal fans should be chosen instead. There should be adequate external static pressure capability in the fans so that the air can be well distributed with minimum drafts generated in the work space. The unit must be capable of heating the air from an outside design temperature that is commonly used in Fairplay to 65°F.

Periodic testing of all local exhaust ventilation systems is necessary to ensure their continued efficiency. Such systems should be tested every three months, or following any major modification.[16] A complete discussion of specific details regarding ventilation system testing, as well as information regarding the design, construction, and operation of local exhaust ventilation systems, is contained in the ACGIH Industrial Ventilation, A Manual of Recommended Practice.[14]

G. Air Monitoring

Periodic monitoring for airborne lead is needed to ensure that engineering controls operate effectively. Air monitoring can also be used to identify the need for further employee protection (i.e., respirators) in certain areas or during certain procedures. When airborne exposures are found to be above the OSHA action level of 30 ug/M^3, as was the case in this survey, the OSHA lead standard calls for repeat monitoring every six months.

This monitoring should be continued until such time as concentrations are found to be below this level in two consecutive measurements conducted at least one week apart.[13] Employees should be informed of the monitoring results.

H. Respiratory Protection

Due to their inherent limitations, respirators should not be considered a primary means of employee protection. A more appropriate means of exposure control in this instance would be properly designed engineering controls; i.e., local exhaust ventilation. However, the use of respiratory protection is a suitable means of exposure control in the event that engineering controls can not feasibly reduce the exposure levels. They may also be used as a backup to existing engineering controls when substances of high toxicity are present. In order to ensure the effective use and function of the respirators, a comprehensive respiratory protection plan should be put in place. Such a program is outlined by the American National Standard Institute in ANSI Standard Z88.6-1984.[15] The program should include a written standard operating procedure which addresses respirator selection, training, fitting, testing, inspection, cleaning, maintenance, storage, and medical examinations.[16]

I. Work Clothing

Wherever lead dust is present, there is a possibility that the employee's skin and clothing may become contaminated. This can lead to subsequent inhalation or ingestion of the lead, which can substantially increase the employee's overall absorption of lead. In addition, lead contamination on skin or clothing may be transported to other areas of the facility, and possibly to the worker's home where secondary exposure of co-workers or family members can occur. In one recent study, blood lead levels were found to be markedly higher in household members residing in homes of workers with occupational lead exposure than in homes of people not occupationally exposed to lead.[17] In order to prevent this secondary source of lead exposure, the appropriate use of dedicated work clothing is required.

J. Hygiene Facilities and Practices

For workers exposed to air lead concentrations above the OSHA PEL, a separate change room, free from lead contamination, must be provided to the employees to store their "street" clothing. Street clothing must be stored separately from clothing worn during work. Showers must be taken at the completion of the work shift to remove any lead that may have reached the employees' skin. Clothing worn at work must not be worn home. The employer must provide work clothing to workers exposed to air lead concentrations above the PEL, and the employer must assure that contaminated clothing is laundered or discarded.[13]

Food, beverages, or tobacco must not be used or stored in lead-contaminated areas. These items can become contaminated with lead and cause subsequent absorption of lead through ingestion or inhalation during eating, drinking, or smoking. Employees should also eat their lunch in a lunchroom separate from the assay lab. All protective clothing should be removed prior to entering the lunchroom, and hands and face should be thoroughly washed.

K. Housekeeping

Housekeeping plays an important role in controlling lead exposures. Dust which has accumulated on surfaces can be reintroduced into the air, thereby increasing airborne lead exposures. Also, dust accumulated on chairs or work surfaces can cause unnecessary contamination of the employees' protective clothing. Therefore, all surfaces in the assay lab should be kept as free as practicable of the accumulation of lead dust. Vacuuming is the preferred means of removing lead dust. Dry or wet sweeping should not be used except in areas where vacuuming is not feasible. A regular housekeeping program should be established to ensure that all areas are periodically cleaned. Pertinent specifications to consider when selecting vacuum cleaners are included in Appendix II.

L. Medical Monitoring

While the previously discussed recommendations have been designed to prevent or minimize lead exposure, medical monitoring plays a supplemental role in that it ensures that the other provisions of the program have effectively protected the individual. The OSHA standard for inorganic lead places significant emphasis on the medical surveillance of all workers exposed to levels of inorganic lead above the action level of 30 ug/M^3 TWA. Even with adequate worker education on the adverse health effects of lead and appropriate training in work practices, personal hygiene and other control measures, the physician has a responsibility for evaluating potential lead toxicity in the worker. It is only through a careful and detailed medical and work history, physical examination and appropriate laboratory testing, that an accurate assessment can be made. Many of the adverse health effects of lead toxicity are either irreversible or only partially reversible, so early detection of disease is very important.[13]

The OSHA lead standard provides detailed guidelines on the frequency of medical monitoring, the important elements in medical histories and physical examinations as they relate to lead, and the required laboratory testing for evaluating lead exposure and toxicity. This standard should be consulted by plant management and the local physician for guidance in carrying out an ongoing medical monitoring program.[13]

In summary, a comprehensive program is necessary for controlling lead exposures during the assay operations. Ongoing attention is needed in all of the areas previously discussed in order to effectively reduce the risk of adverse health effects.

It should be noted that the environmental survey covered only those operations related to lead exposure. The sample preparation process presents a potential for exposure to crystalline silica. Therefore, an evaluation of exposures during this operation should also be conducted.

IX. REFERENCES

1. Haffty J, Riley LB, Goss WD: A Manual on Fire Assaying and Determination of the Noble Metals in Geological Materials, Geological Survey Bulletin 1445, US Dept. of the Interior, Washington DC, 1977.

2. National Institute for Occupational Safety and Health. NIOSH Manual of Analytical Methods. 3rd ed. Cincinnati, Ohio. DHHS (NIOSH) publication no. 84-100, 1984.

3. Zenz, Carl (ed.), Occupational Medicine: Principles and Practical Applications, 2nd edition, Year Book Medical Publishers, Chicago, 1988.

4. USDOL-OSHA, OSHA Analytical Lab, OSHA List of Laboratories Approved for Blood Lead Analysis. Undated 6/2/89. Salt Lake City, Utah.

5. Blumberg WE, Eisinger J, Lamola AA, Suckerman DM. Principles and Application of Hematoflurometry. J.Clinical Lab Automation 1984;4(1): 29-42.

6. Landrigan I. Popecu HI, Gavanescu O, et.al. Reproductive ability of workmen occupationally exposed to lead. Arch Environ Health 1975;30:396-401.

7. Mahaffey K, Annest J, Roberts J, Murphy R: National Estimates of Blood Lead Levels. United States, 1976-1980. NEJM 1982;307:573-9.

8. Annest J, Dirkle J, Makuc C, Nesse J, Bayse D, Kovar M: Chronological Trends in Blood Lead Levels Between 1976 and 1980. NEJM 1983;308:1373-7.

9. Centers for Disease Control. Preventing Lead Poisoning in Young Children: Centers for Disease Control, 1985.

10. Bellinger D, Leviton A, Waternaux C, Needleman H, Rabinowitz M: Longitudinal Analysis of Prenatal and Postnatal Lead Exposure and Early Cognitive Development. NEJM 1987;316:1037-43.

11. Fulton M, Hepburn W, Hunter R, Laxen D, Raab D, Thomson G: Influence of Blood Lead on the Ability of and Attainment of Children in Edinburgh. Lancet 1221-25, 1987.

12. Cullen MR, and Rosenstock L: Clinical Occupational Medicine. W.B. Saunders Company; Philadelphia, PA 1986.

13. Occupational Safety and Health Administration. Occupational exposure to lead--final standard (29 CFR Section 1910.1025 - Lead). U.S. Department of Labor, Federal Register 1978 Nov 14:53007.

14. American Conference of Governmental Industrial Hygienists. Industrial Ventilation, A Manual of Recommended Practice, 18th Edition. Lansing, Michigan: ACGIH, 1984.

15. American National Standards Institute, Inc. American National Standard for Respiratory Protection - Respirator Use - Physical Qualifications for Personnel. New York: ANSI Inc., 1984.

16. National Institute for Occupational Safety and Health. Guide to Industrial Respiratory Protection. Cincinnati, Ohio. DHHS (NIOSH) publication no. 87-116, 1987.

17. Grandjean P, Bach E: Indirect Exposures: The Significance of Bystanders at Work and at Home. American Industrial Hygiene Journal, Volume 47, 1986.

X. AUTHORSHIP AND ACKNOWLEDGEMENTS

Report Prepared By:

Steven A. Lee, M.S., C.I.H.
Industrial Hygienist
NIOSH - Region VIII
Denver, Colorado

Joseph Goldfield, B.Ch.E, P.E.
Engineering Consultant
Denver, Colorado

Thomas R. Hales, M.D.
Medical Officer
NIOSH - Region VIII
Denver, Colorado

Originating Office:	Division of Surveillance, Hazard Evaluations & Field Studies Hazard Evaluation and Technical Assistance Branch Cincinnati, Ohio
Report Typed By:	Marile F. DiGiacomo Secretary NIOSH - Region VIII Denver, Colorado
Environmental Laboratory Analysis:	Datachem Salt Lake City, Utah
Biological Laboratory Analysis:	ESA Laboratories, Incorporated Bedford, Massachusettes

XI. DISTRIBUTION AND AVAILABILITY OF DETERMINATION REPORT

Copies of this Determination Report are currently available upon request from NIOSH, Hazard Evaluations and Technical Assistance Branch, 4676 Columbia Parkway, Cincinnati, Ohio 45226. After 90 days the report will be available through the National Technical Information Services (NTIS), 5285 Port Royal Road, Springfield, Virginia 22161. Information regarding its availability through NTIS can be obtained from the NIOSH publications office at the Cincinnati, address. Copies of this report have been sent to:

A. ALMA American Labs
B. Occupational Safety and Health Administration - Region VIII
C. NIOSH Regional Offices/Divisions
D. Colorado Department of Health

For the purposes of informing the affected employees, copies of the report should be posted in a prominent place accessible to the employees, for a period of 30 calendar days.

TABLE 1

Lowest Blood Lead Levels Reported To Cause Various Health Effects In Adults

Blood Lead Level	Health Effect
100-120 ug/dl	Central nervous system toxicity (encephalopathy)
100 ug/dl	Chronic renal damage
80 ug/dl	Low blood count (anemia)
60 ug/dl	Pregnancy complications
50 ug/dl	Decreased hemoglobin production mild central nervous system symptoms
40 ug/dl	Decrease peripheral nerve conduction pre-term delivery
30 ug/dl	High blood pressure

Table 2

Air Lead Levels
Alma American Labs
Fairplay, Colorado
HETA 89-052

February 23, 1989

Job/Location	Sample Type	Sample Time	Concentration (ug/m^3)
Long Term Samples			
Fire Assay Asst.	PBZ	7:35a - 2:10p	200*
Fire Assayer	PBZ	7:55a - 2:11p	120*
Chemist	PBZ	7:38a - 2:07p	15*
Receptionist's Desk	Area	7:42a - 2:10p	7
Conference/Break Room	Area	7:43a - 2:08p	8
Balance Room	Area	9:35a - 2:10p	6
Flux Weighing Table	Area	7:59p - 2:12p	48
Near Crucible Furnace	Area	8:04p - 2:10p	61
Short Term Samples			
Charging crucibles	PBZ	9:53a - 10:20a	380
Unloading crucibles	PBZ	11:00a - 11:05a	80
Unloading crucibles	PBZ	12:03a - 12:07a	29
Busting slag and pounding buttons	PBZ	11:25a - 11:32a	1000
Loading buttons into pre-heated cupels	PBZ	12:34p - 12:36p	350
Unloading cupels	PBZ	1:57p - 1:58p	1400
Near cooling cupels	Area	1:57p - 2:13p	110
*Evaluation Criterion			50

Table 3

Blood Lead* and FEP** Results

Alma American Labs, Fairplay, Colorado
February 22, 1989

Job Location		Blood Lead (ug/dl)*	FEP (ug/dl)**
1.	Assay Shop	55	147
2.	Assay Shop	39	44
3.	Assay Shop	43	47
4.	Assay Shop	29	25
5.	Front Office	24	27
6.	Front Office	13	27

* Blood lead, reference range for occupational exposure: less than 40 ug/dl.
** FEP = Free erythrocyte protoporphyrin, normal range: less than 50 ug/dl.

FIGURE I
Fire Assay Flow Sheet

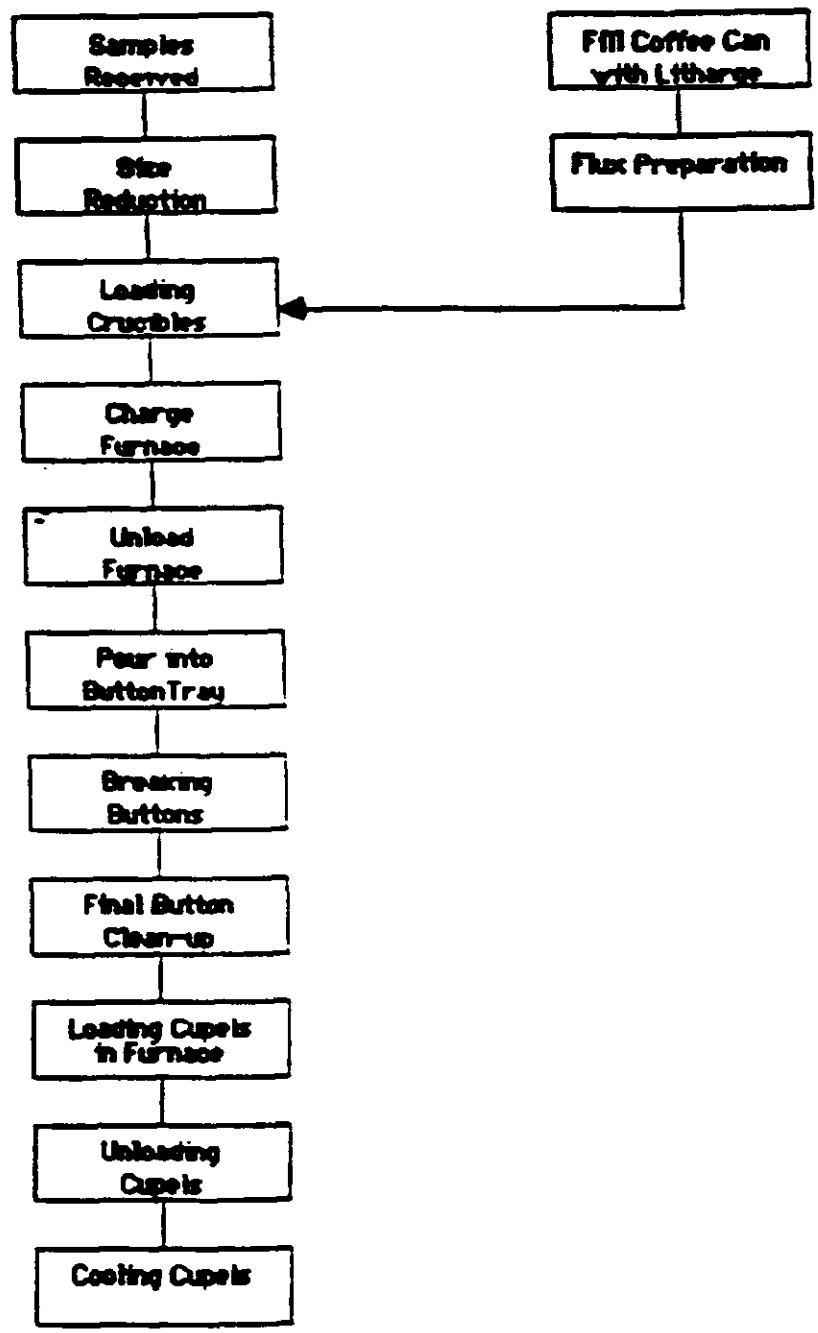

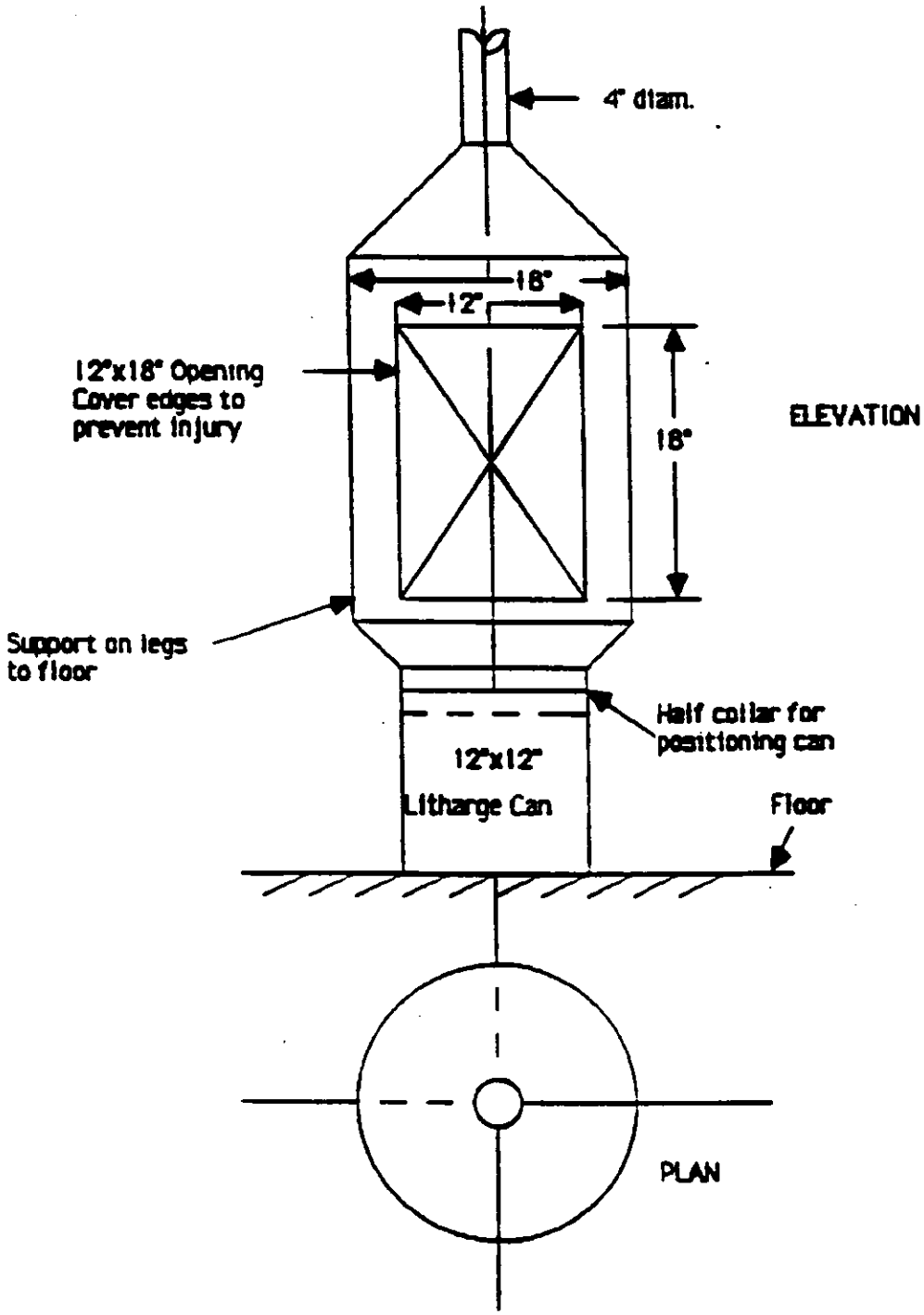

FIGURE II

LITHARGE CAN HOOD

J. G.

April 17,1989

Scale 1" = 1 Foot

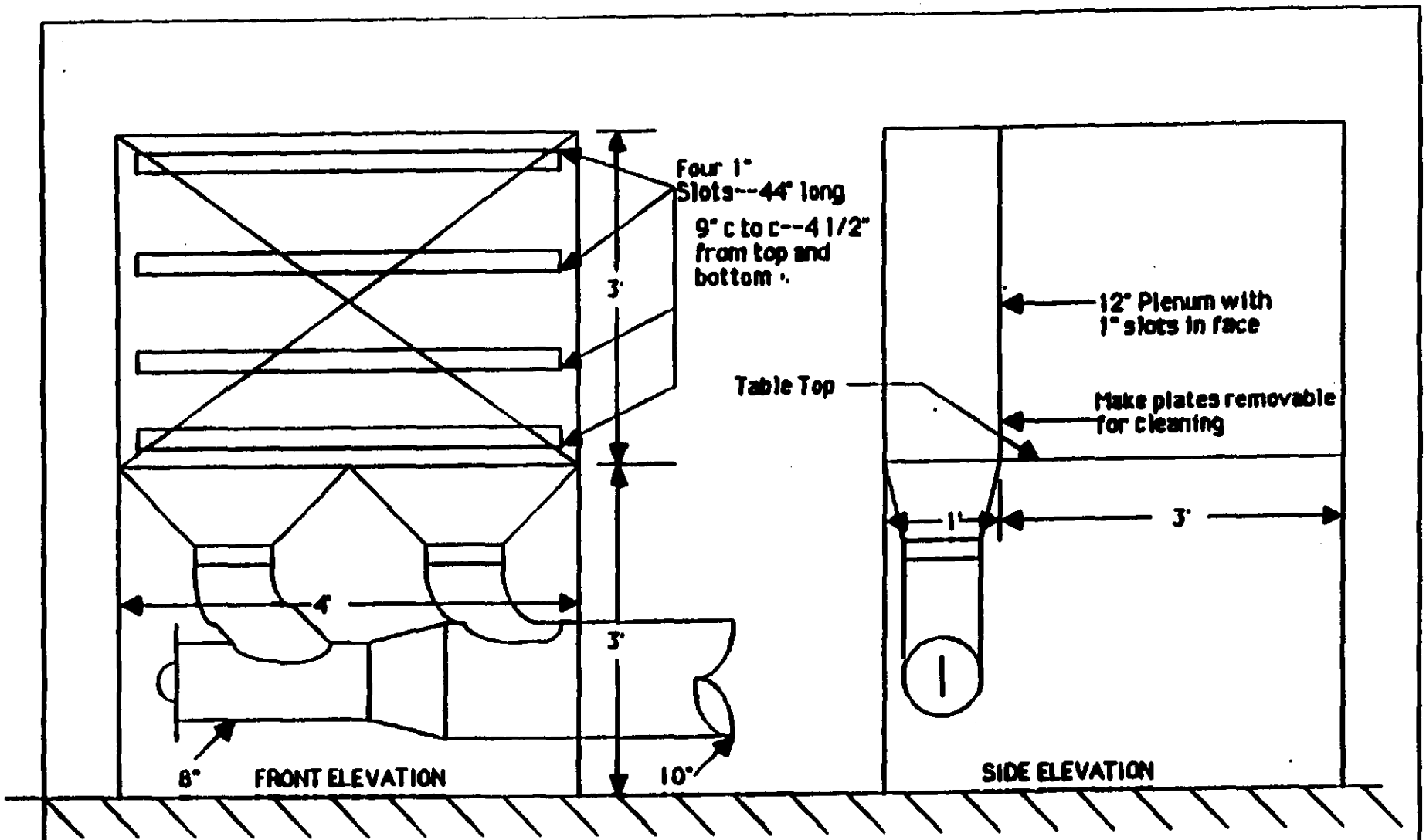

FIGURE III

TABLE VENTILATION

J. G. Scale 3/4"=

APRIL 18, 1989 1 Foot

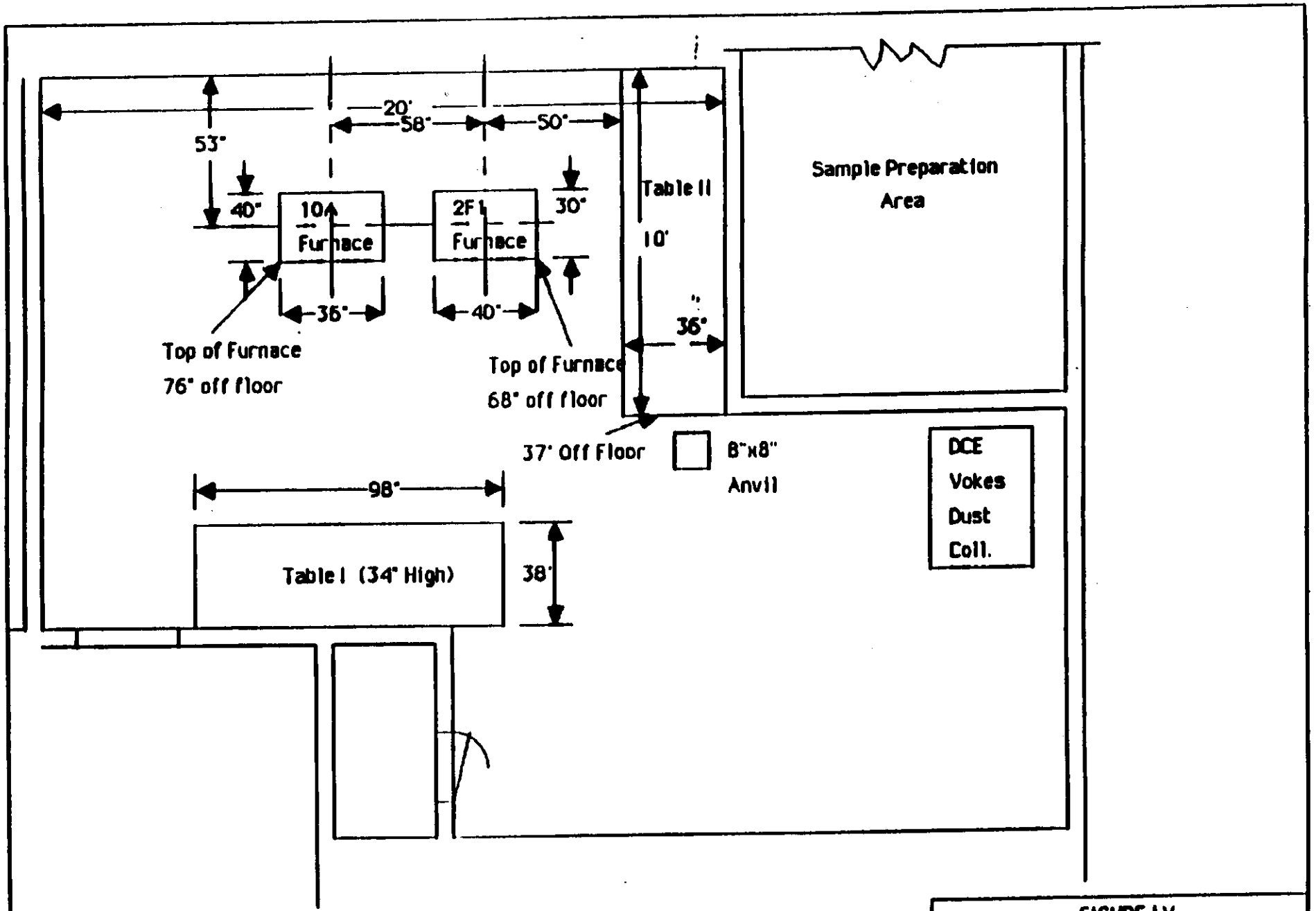

Table I Notes

1. Make up and mix fluxes
2. Charge fluxes into crucibles
3. Store fluxes
4. Weigh and charge ore samples
5. Cover with borax glass

Table II Notes

1. Pour crucible contents into conical molds
2. Break up molded glass; final break-up on anvil
3. Make up lead buttons; charge cupels
4. Cool crucibles, molds and cupels

FIGURE IV

Alma American Laboratories, Inc.
Fire Assay Area

J. B.
April 15, 1989

Scale 1/4"
1 Foot

APPENDIX I

SOME SHEET METAL SPECIFICATIONS

1. Ducts shall be made of galvanized sheet steel of the following thicknesses:

3" to 12" diameter----------24 gauge

13" to 18" diameter----------22 gauge

19" to 28" diameter----------20 gauge

29" to 36" diameter----------18 gauge

2. Ducts shall be constructed so that they are leaktight with soldered joints or taped joints.

3. All lap joints shall be constructed so that the outlet of one length of pipe enters the inlet of the next in the direction of air flow.

4. Hoods shall be made of metal at least two gauges heavier than the pipes to which they are connected.

5. 90° elbows shall have a centerline radius that is two times the diameter of the pipes joined.

6. 90° elbows six inches or less in diameter shall be made of five pieces. Elbows of larger diameter shall be made of seven pieces. Angles different than 90° shall be made of proportionate numbers of pieces. They shall be made of sheet metal that is two gauges heavier than the straight pipes.

7. Every branch pipe shall be connected to the main pipe at an angle of 45°.

8. Main pipes shall be sized so as to be at least equal in area to all the branch pipes connected to them.

APPENDIX II

VACUUM CLEANING SPECIFICATIONS

The following specifications may be used as a guide in selecting industrial vacuum cleaning equipment:

1. Hose and tools may be 1 1/12" or 2". 1 1/2" requires 75 CFM and 2" requires 150 CFM per nozzle. The smaller size hose is easier to use and less expensive but does not clean as fast.

2. The exhaust blower should be capable of developing about 1" of mercury (13.6" of water) static pressure at the cleaning nozzle.

3. The dust container should have adequate holding capacity so that it does not have to emptied frequently.

4. The filter should be made of standard industrial filter cloth that can be shaken to clean. Ratio of air to cloth should best not exceed four to one.

5. An after filter similar to HEPA filters should be used where toxic dusts are being handled.