This Health Hazard Evaluation (HHE) report and any recommendations made herein are for the specific facility evaluated and may not be universally applicable. Any recommendations made are not to be considered as final statements of NIOSH policy or of any agency or individual involved. Additional HHE reports are available at http://www.cdc.gov/niosh/hhe/reports

U.S. DEPARTMENT OF HEALTH AND HUMAN SERVICES • Public Health Service
Centers for Disease Control • National Institute for Occupational Safety and Health

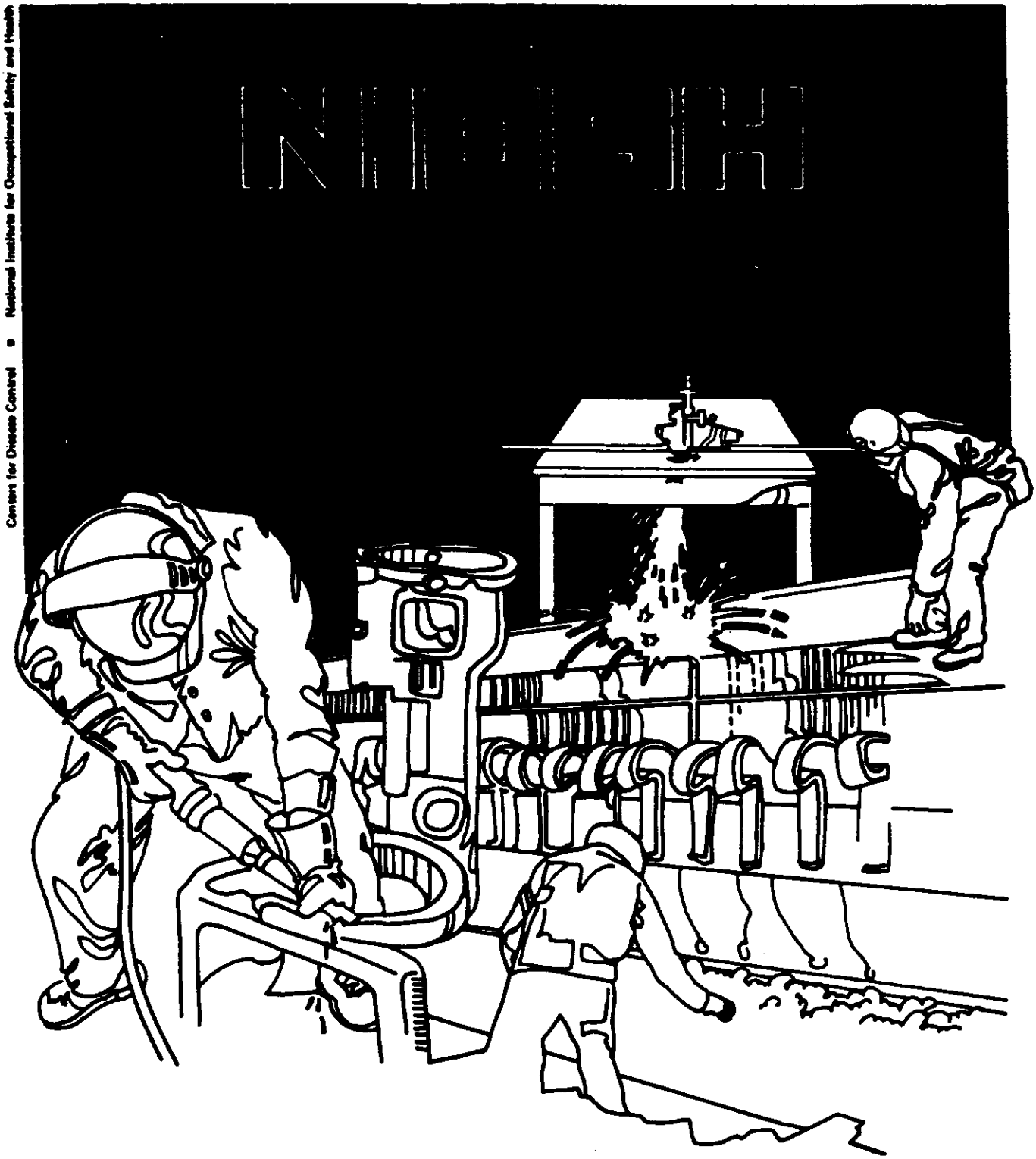

Health Hazard Evaluation Report

HETA 87-376-2018
U.S. DEPARTMENT OF JUSTICE
UNITED STATES MARSHALS SERVICE
WASHINGTON, D.C.

PREFACE

The Hazard Evaluations and Technical Assistance Branch of NIOSH conducts field investigations of possible health hazards in the workplace. These investigations are conducted under the authority of Section 20(a)(6) of the Occupational Safety and Health Act of 1970, 29 U.S.C. 669(a)(6) which authorizes the Secretary of Health and Human Services, following a written request from any employer or authorized representative of employees, to determine whether any substance normally found in the place of employment has potentially toxic effects in such concentrations as used or found.

The Hazard Evaluations and Technical Assistance Branch also provides, upon request, medical, nursing, and industrial hygiene technical and consultative assistance (TA) to Federal, state, and local agencies; labor; industry and other groups or individuals to control occupational health hazards and to prevent related trauma and disease.

Mention of company names or products does not constitute endorsement by the National Institute for Occupational Safety and Health.

HETA 87-376-2018
MARCH 1990
U.S. DEPARTMENT OF JUSTICE
UNITED STATES MARSHALS SERVICE
WASHINGTON, D.C.

NIOSH INVESTIGATORS:
Christopher M. Reh, M.S.
Matthew K. Klein, P.E.

I. SUMMARY

On July 29, 1987, the National Institute for Occupational Safety and Health (NIOSH) received a request for a Health Hazard Evaluation from the United States Marshals Service (hereinafter referred to as the Marshals Service) in Washington, D.C. The Marshals Service requested NIOSH's assistance in testing the efficacy of recent renovations to the ventilation system of their indoor firing range.

On August 11-12, 1987, industrial hygiene and ventilation surveys were conducted during four consecutive handgun qualifying sessions in the firing range. Each qualifying session consists of 60 rounds fired in 10-12 minutes. Personal breathing zone air sampling (using NIOSH Method 7300) on the three shooters and the range officer measured average lead exposure concentrations during the four qualifying sessions of 2073, 1786, 1072, and 142 micrograms of lead per cubic meter of air (ug/m^3), respectively. Assuming an exposure equal to these average lead concentrations, and no other lead exposure during the workshift, 8-hour time-weighted average (TWA) lead concentrations of 194, 167, 101, and 13 ug/m^3 were calculated for the three shooters and the range officer. These data indicated that the three shooters were overexposed to lead, according to the Occupational Safety and Health Administration's (OSHA) permissible exposure limit (PEL) of 50 ug/m^3. Bulk sampling revealed that the sand from the bullet trap was contaminated, containing 41% lead by weight. Measurements and observations taken during the operation of the firing range's ventilation system found that the actual airflow was substantially less than the design airflow; and that supply air exited the supply registers as a jet, producing a recirculation effect.

Based on the above data, the NIOSH investigators concluded that the firing range's ventilation system did not adequately remove lead contaminent from the air, exposing range users to lead levels which were potentially hazardous to their health. To alleviate this, the NIOSH investigators recommended specific ventilation system modifications, which included the installation of a supplied air plenum which delivers air through a perforated hardboard face.

After the firing range's ventilation system was modified per the NIOSH recommendations, the NIOSH investigators performed a follow-up industrial hygiene survey using the initial survey protocol. All of the personal breathing zone air samples for lead were below the OSHA PEL, with 11 of 12 of these samples being below the limit of detection (LOD) for the method.

Based on the data collected during the initial survey, the NIOSH investigators concluded that a health hazard did exist from exposure to lead during handgun qualifying sessions in the firing range. Modifications to the firing range's ventilation system were proposed by the NIOSH investigators as engineering controls for reducing exposure. A follow-up survey after these modifications found that the NIOSH-recommended changes eliminated the health hazard from exposure to lead when firing a handgun in the range. Other recommendations for safe use of the range are offered in Section VII of this report.

KEYWORDS: SIC 9221 (Police Protection), indoor firing ranges, inorganic lead, ventilation system design, engineering controls.

II. INTRODUCTION

On July 29, 1987, NIOSH received a request for a health hazard evaluation from the United States Marshals Service in Washington, D.C. Specifically, the Marshals Service requested NIOSH's assistance in testing the efficacy of the local exhaust ventilation system for removing airborne lead in their indoor firing range.

An initial site visit was performed on August 11-12, 1987; it included an industrial hygiene survey to determine lead exposures during the firing of handguns, and a ventilation survey to determine the airflow patterns in the range. Results from the initial site visit were forwarded to the Marshals Service on November 30, 1987; and included recommendations to temporarily suspend use of the range, to implement a blood lead testing program as part of their annual physicals, and on methods for removing, storing, transporting, and disposing of the lead-contaminated sand in the bullet trap. On December 17, 1987, the NIOSH investigators presented to the Marshals Service proposed modifications for delivering supply air to the indoor firing range. After the system was modified per these specifications, the NIOSH investigators conducted a follow-up survey on September 22, 1988. The data from this survey were reported to the Marshals Service on January 13, 1989, with the NIOSH investigators finding the indoor firing range safe for use.

III. BACKGROUND

In June 1987, the Marshals Service closed its indoor firing range in Washington, D.C. because its construction and engineering controls did not conform to proper design criteria. Since members of the Marshals Service are frequently required to qualify with their handguns, and since the availability of range-time is limited in the Washington, D.C. area, a decision was made to bring the existing ventilation system into conformance with NIOSH specifications. The General Services Administration (GSA) solicited the services of an outside contractor to design and install a local exhaust ventilation system for the range. After this renovation was completed, NIOSH was requested by the Marshals Service to test the efficacy of the new ventilation system during handgun qualifying sessions.

As shown in Figure 1, the indoor firing range consists of three shooting booths, with only two having shooter's benches. The dimensions of the entire firing range are approximately 102 feet in length, 12 feet in width, and 8 feet in height. Behind the shooting booths is the range officer's desk. Downrange is a bullet trap which consists of angled steel plate which deflects bullets into a sand pit.

According to Figures 1 and 2, air is supplied to the shooting booths from three registers (SR-1, 2, and 3) which are in a duct adjacent to the ceiling. Each of these registers have double deflection louvers and opposed blade dampers to angle air towards the shooters and to distribute the air horizontally. Supply air consisted of filtered, recirculated air and tempered outside air.

Air is exhausted from the firing range by two separate exhaust systems. The first system pulls air through three registers (ER-1, 2, 3) located in the ceiling and about 20 feet downrange from the shooting booths. Each register contains opposed blade dampers for adjusting airflow and is covered by a grille. Exhaust air passes from these registers, through a panel filter, through a HEPA filter, and is exhausted outside the building.

The second exhaust system is located in the ceiling above the bullet trap. Air is exhausted through three registers (ER-4, 5, 6) which also contain opposed blade dampers and are covered by a grille. In this system, exhaust air passes through two automatic roll filters, an electrostatic precipitator, and a HEPA filter. After filtration, the air passes through a centrifugal blower and an air conditioner, and is either recirculated into the range or exhausted outside the building.

Automatic dampers (D-1, 2, 3) control the amount of fresh and recirculated air in this ventilation system. Airflow from the air conditioning unit is controlled with automatic dampers D-4 and D-5. When the ventilation systems are activated, these dampers switch the airflow from general building ventilation, to the supply registers. The various components of these ventilation systems are electrically interconnected; turning "on" the range's lighting also activates the exhaust blowers, the automatic dampers, and the filtering systems.

IV. EVALUATION DESIGN AND METHODS

The industrial hygiene and ventilation protocols presented below were used in both the initial and follow-up surveys.

A. Industrial Hygiene Protocol

The industrial hygiene portion of this survey consisted of both personal breathing zone and area air sampling for lead, according to NIOSH Method 7300.[1] Air was sampled at a nominal flowrwate of 2.0-3.5 liters per minute (Lpm) using calibrated, battery-powered sampling pumps. The sample media was a cellulose ester membrane filter with a 0.8 micrometer (um) pore size. After collecting the samples, the filters were ashed with nitric and perchloric acids, diluted to 25 milliliters (ml), and analyzed by inductively coupled plasma atomic emission spectrometry. The limit of detection (LOD) for this method is 2.0 micrograms (ug) of lead per sample.

Air sampling was performed during four consecutive qualifying sessions, with each session consisting of 60 rounds fired in 10-12 minutes. The typical firearm used during these surveys was a Smith & Wesson .38 Special, Model 10, with a 4 inch barrel. The standard ammunition was a 148 grain, center fire, lead wadcutter bullet which was copper-jacketed and contained a hollow point. Personal breathing zone air samples were obtained from the three shooters and the range officer. Area air samples were obtained at four locations in the range: the range officer's desk, above the shooter in the middle shooting booth, the middle of the range, and near the bullet trap. The filters for the personal breathing zone samples were changed after each qualifying session; the area air samples ran continuously during the four sessions.

Bulk samples of the sand in the bullet trap were obtained (during the initial survey only) to determine if the sand was contaminated with lead. The samples were prepared according to NIOSH Method 7300.[1] One gram aliquots of the sand were digested with nitric and perchloric acids, and the samples were filtered to remove particulate matter. The volume of fluid was evaporated to approximately 1 ml and diluted to 25 ml with double deionized water. The samples were analyzed according to NIOSH Method 7082, which utilizes atomic absorption spectroscopy.[1]

B. Ventilation Protocol

Total airflow passing through each register was measured with an Alnor Balometer. These measurements were verified by using a United Sensor Pitot Tube mated with an EDM Electronic Digital Manometer to measure velocity pressure along 52 traverse points in each system's ductwork. Air currents in the firing range were observed with the aid of a Rosco Model 1500 Smoke Machine.

V. EVALUATION CRITERIA

A. Environmental Criteria

As a guide to the evaluation of the hazards posed by workplace exposures, NIOSH field staff employ environmental evaluation criteria for assessment of a number of chemical and physical agents. These criteria are intended to suggest levels of exposure which most workers may be exposed up to 10 hours per day, 40 hours per week, for a working lifetime, without experiencing adverse health effects. It is, however, important to note that not all workers will be protected from adverse health effects if their

exposures are maintained below these levels. A small percentage may experience adverse health effects because of individual susceptibility, a pre-existing medical condition, and/or a hypersensitivity (allergy).

In addition, some hazardous substances may act in combination with other workplace exposures, the general environment, or with medications or personal habits of the worker to produce health effects, even if the occupational exposures are controlled at the level set by the evaluation criterion. These combined effects are often not considered in the evaluation criteria. Also, some substances are absorbed by direct contact with the skin and mucous membranes, and thus, potentially increase the overall exposure. Finally, evaluation criteria may change over the years as new information on the toxic effects of an agent become available.

The primary sources of environmental evaluation criteria for the workplace are: 1) NIOSH criteria documents and recommendations, including recommended exposure limits (RELs), 2) the American Conference of Governmental Industrial Hygienists (ACGIH) Threshold Limit Values (TLVs), and 3) the U.S. Department of Labor, OSHA permissible exposure limits (PELs). Often, the NIOSH RELs and ACGIH TLVs are lower than the corresponding OSHA standards. Both NIOSH recommendations and ACGIH TLVs usually are based on more recent information than are the OSHA standards. The OSHA standards also may be required to take into account the feasibility of controlling exposures in various industries where the agents are used; the NIOSH-recommended standards, by contrast, are based primarily on concerns relating to the prevention of occupational disease. In evaluating the exposure levels and the recommendations for reducing these levels found in the report, it should be noted that industry is legally required by the Occupational Safety and Health Act of 1970 to meet those levels specified by an OSHA standard.

A time-weighted average (TWA) exposure refers to the average airborne concentration of a substance during a normal 8- to 10-hour workday. Although not applicable in this evaluation, some substances have recommended short-term exposure limits or ceiling values which are intended to supplement the TWA, where there are recognized toxic effects from high short-term exposures.

B. Lead

Inhalation (breathing) of lead dust and fume is the major route of lead exposure in industry. A secondary source of exposure may be from ingestion (swallowing) of lead dust deposited on food, cigarettes, or other objects. Once absorbed, lead is excreted from the body very slowly. Absorbed lead can damage the kidneys, gastrointestinal tract, peripheral and central nervous systems, and

the blood forming organs (bone marrow). These effects may be felt as weakness, tiredness, irritability, constipation, anorexia, abdominal discomfort, colic, anemia, high blood pressure, kidney damage, mental deficiency, anxiety, depression, forgetfulness, and/or slowed reaction times. Chronic lead exposure is associated with infertility and with fetal damage in pregnant women.[2,3,4]

Lead has been shown to cause chronic kidney disease (nephropathy) in workers with a lengthy occupational exposure.[5] The process is gradual and dose related. Persons who experience the greatest lifetime risk of manifesting lead-induced kidney disease are those who have experienced the most lead absorption over their working career. The initial signs of lead nephropathy are subtle; affected workers will usually have no symptoms in the early stages. The workers' renal function test values may still be within the broad range of normal, although their test results will tend over time to move toward the high end of the normal range. Because the kidney has an enormous reserve capacity, results of renal function tests, e.g. blood urea nitrogen (BUN), serum creatinine, and serum uric acid, will not be abnormal until one-third to one-half of kidney function has been compromised.[6] For that reason, more sensitive screening tests of renal function have been sought. These include serum measurement of 1,25-dihydroxy vitamin D, which may decrease in persons with lead-induced kidney damage.[7] Other abnormalities which may also be noted in chronic lead nephropathy include aminoaciduria, renal glycosuria, and hypercalcuria. Gout is a particularly noteworthy manifestation of lead nephropathy[8]; the elevated serum uric acid concentrations which may occur in lead nephropathy have been associated with the development of gouty arthritis.

The OSHA PEL for lead in air is 50 ug/m^3 calculated as an 8-hour TWA for daily exposure.[9] This regulation also requires semi-annual blood lead monitoring of employees exposed to 30 ug/m^3 or greater of lead.[9] Employees whose blood lead level is 40 ug/dl or greater must be retested every two months, and be removed from a lead-exposed job if their average blood lead level is 50 ug/dl or more over a 6 month period. A blood lead level of 60 ug/dl or greater, confirmed by retesting within two weeks, is an indication for immediate medical removal. Workers on medical removal should not be returned to a lead-exposed job until their blood lead level is confirmed to be below 40 ug/dl.[9] Removed workers have protection for wage, benefits, and seniority for up to 18 months until their blood levels decline to below 40 ug/dl and they can return to lead exposure areas.

VI. RESULTS AND DISCUSSION

A. Initial Industrial Hygiene Survey

The results from the personal breathing zone and area air sampling performed during the initial survey are shown in Tables 1, 2, and 3. The average lead exposure concentrations measured in the firing range were as follows: 2073 ug/m^3 for the shooter in Booth 1, 1786 ug/m^3 for the shooter in Booth 2, 1072 ug/m^3 for the shooter in Booth 3, and 142 ug/m^3 for the range officer. Using the above lead exposure levels, the length of time required to complete the four qualifying rounds, and assuming that the employees of the Marshals Service have zero lead exposure when not using the firing range, 8-hour time weighted averages were calculated for the shooters and the range officer. These data, shown in Table 2, clearly demonstrate that the firing range's ventilation system failed to remove the lead contaminant, and that there was a definite potential for overexposure of firing range personnel to airborne lead. Bulk sampling of the sand in the bullet trap found the sand to contain 41% lead by weight (0.41 grams of lead per gram of sand).

B. Ventilation Survey and Recommendations

Table 4 is a comparison of the design flowrates for the supply and exhaust registers to the actual flowrates as measured during the initial NIOSH survey. According to the system's design criteria for the ventilation system, the supply air should have been 85.7% of the exhaust air. The NIOSH measurements found a supply deficit of 45.6% of the total exhaust air. Furthermore, these data clearly show that the firing range's ventilation system was operating at a level below the design specifications.

Airflow patterns in the firing range were modeled using the smoke machine, and are presented in Figure 3. The supply air exited the supply registers in the form of a jet. When the supply air jet entered the relatively still air in the range, the jet expanded due to the turbulence between the jet's boundaries and room air. When the jet was aimed towards a surface, in this case the floor, it "attached" to and rode the surface until the jet dissipated. In addition, the jet had a tendency to induct more air to its origination points than to points downstream from its source. Because of this, the jet will pulled air from downrange, producing a recirculation effect.

Based on the above ventilation measurements and the observed airflow patterns, the NIOSH investigators concluded that the firing range's ventilation system did not adequately remove lead

contaminent from the range air. Consequently, users of the range were exposed to lead levels which were potentially hazardous to their health. In considering this, the NIOSH investigators proposed changes in the manner which supply air was introduced into the range. The following modifications, as shown in Figure 4, were presented to the Marshals Service to reduce the jet effect and reduce to the lead exposures:

1. Remove the registers and blank off (with sheet metal) the openings for the supply air.

2. Install a supply air plenum which is 12 feet wide, 2 feet deep, and extends from the floor to the bottom of the supply air duct.

3. Air will be delivered from the supply air duct through the face of the plenum, which will be constructed of perforated hardboard with 1/4 inch diameter holes spaced on 1 inch centers.

4. The amount of supply air delivered to the plenum should be 6000 cubic feet per minute (cfm), as specified in the original system design.

C. Follow-Up Industrial Hygiene Survey

Following the modification of the firing range's ventilation system, a follow-up survey was performed to determine the efficacy of the proposed changes. The results from the personal breathing zone and area air sampling performed during this survey are shown in Tables 5 and 6, respectively. As shown in Table 5, all of the personal breathing zone air samples are below the OSHA PEL of 50 ug/m^3. These data show that 11 of 12 of these samples found no detectable lead in the sample air. Low levels of iron, magnesium, and zinc were also found on four of these personal personal samples. When considering the personal breathing zone data from the initial survey, and the data from the follow-up survey, the NIOSH investigators conclude that the NIOSH-proposed modifications to the firing range's ventilation system were successful in reducing the lead exposures to safe and healthy levels.

From Table 6, area air sampling performed in each booth and above the shooters found concentrations of lead from non-detectable to 310.3 ug/m^3. No detectable levels of lead were found at the range officer's position. Area sampling downrange from the shooting booths measured lead levels of 431.0 ug/m^3 (middle of the range at a height of 7') and 2068.9 ug/m^3 (at the bullet trap). A small air leak in the exhaust side of the ventilation system emitted an airborne concentration of lead of 120.7 ug/m^3. Sampling of the air exiting the diffuser in the hallway (outside of

the range) found no detectable levels of lead. This area sampling produced results which were expected by the NIOSH investigators. Since the ventilation system moves air from behind the shooters towards the bullet trap, air sampling performed near or downrange from the booths should produce high concentrations of lead during any qualifying session. This sampling documents the movement of airborne lead away from the shooters and the range officer. Air sampling at the leak in the ventilation system demonstrates the ability of such leaks to contaminate other areas of the building.

VII. RECOMMENDATIONS

In addition to the proposed modifications to the firing range's ventilation system, the following recommendations are offered per the observations made during the NIOSH surveys:

1. The number of objects which may obstruct airflow in the range, such as chairs, tables, desks, etc., must be minimized. Any obstruction may create a turbulent backflow of contaminant towards the shooters.

2. After each use, the indoor firing range should be thoroughly cleaned with a vacuum designed to collect lead dust. Dry sweeping should never be used in the range.

3. Develop a formal check system where someone in the Marshals Service, preferably the range officer, is responsible for assuring that the fans and filters are maintained. This maintenance should include leak testing whenever new HEPA filters are installed. This person should receive a copy of the ventilation system's maintenance manual, and dated reports from GSA describing what work was performed on the system, and ensure that GSA workers follow a dedicated maintenance schedule.

4. Included in the periodic maintenance schedule should be an inspection of the ventilation system for leaks. Any leaks should be immediately plugged or sealed in order to minimize lead contamination of other areas.

5. Develop a lockout program for the range's ventilation system. Again, this should be a formalized program that is overseen by someone within the Marshals Service.

6. The range should include a panel of indicator lights which are electrically connected to the ventilation system's exhaust fans. These lights should indicate when the firing range ventilation system is operating.

7. The sand in the bullet trap is highly contaminated with lead (0.41 grams of lead per gram of sand). The following recommendations should be followed in order to protect the worker(s) digging out the pit:

   a. The range's ventilation system should be "on" during the task.

   b. Thoroughly wet down the sand to reduce dust levels. Dry sand should not be shoveled; the worker should pause frequently to wet the sand.

   c. The worker(s) should wear the following personal protective equipment: a disposable, hooded Tyvek suit with the sleeves and pant legs taped shut; rubber gloves with the open ends taped shut; safety goggles; a NIOSH approved, half-mask respirator with high efficiency particulate canisters. Minimum requirements for a respirator program can be found in the OSHA Safety and Health Standards, 29 CFR 1910.134.

8. Since the sand in the pit is contaminated with lead, it may be considered a hazardous waste according to the Resource Conservation and Recovery Act (RCRA), 40 CFR 261 Subparts C and D. Within RCRA, the Environmental Protection Agency (EPA) has specifically defined a test to determine if a solid waste (such as your sand) is a hazardous waste. This is Extraction Procedure (EP) toxicity testing which is designed to identify wastes which are likely to leach hazardous concentrations of specific toxic chemicals into groundwater. Under RCRA, lead is listed as one of these toxic chemicals (40 CFR 261.3 (a)). The protocol for EP toxicity testing is described in 40 CFR 261, Appendix II. Briefly, the EP toxicity test will require the Marshals Service to submit a bulk sample of the sand to a reputable, accredited laboratory which routinely performs this test according to RCRA's specifications. If the testing reports greater than 5 milligrams of lead per liter of leachate, then the contaminated sand will be considered a hazardous waste and must be disposed of in an approved hazardous waste treatment, storage, or disposal facility.

9. Industrial hygiene sampling, using a protocol similar to that used in the initial and follow-up industrial hygiene surveys, should be performed on an annual basis. This sampling protocol will provide a yearly test of the ventilation system's ability to protect the shooters and range officer from exposure to lead.

VIII. REFERENCES

1. National Institute for Occupational Safety and Health: Manual of Analytical Methods, Third Edition, Volumes 1 & 2. Cincinnati, Ohio: U.S. Department of Health and Human Services, NIOSH. 1984.

2. Hernberg S, Dodson WN, Zenz C: Lead and its compounds. In Occupational Medicine. 2nd Edition, Chicago: Year Book Medical Publishers, 547-582. 1988.

3. Landrigan PJ, Froines JR, Mahaffey KR: Body lead burden: summary of epidemiological data on its relation to environmental sources and toxic effects. In Dietary and Environmental Lead: Human Health Effects. Amsterdam: Elsevier Science Publishers. 1985.

4. Proctor NH, Hughes JP, Fischman ML: Lead. In Chemical Hazards of the Workplace. Second Edition, Philadelphia: J. B. Lippincott Company, 294-298. 1988.

5. Wedeen RP, Maesaica JK, Weiner B, et al: Occupational lead nephropathy. American Journal of Medicine 59:630. 1975.

6. Page LB, Culver PJ: A syllabus of laboratory examinations in clinical diagnosis. Cambridge: Harvard University Press. 1962.

7. Rosen JF, Chesney R, Hamstra A, DeLuca H, Mahaffey K: Reduction in 1,25-dihydroxyvitamin D in children with increased lead absorption. New England Journal of Medicine 302:1128-31. 1980.

8. Ball GV, Sorensen LB: Pathogenesis of hyperuricemia in saturnine gout. New England Journal of Medicine 280:119. 1969.

9. Occupational Safety and Health Administration: Occupational exposure to lead--final standard, 29 CFR Part 1910.1025. Federal Register:53007. November 14, 1978.

IX. AUTHORSHIP AND ACKNOWLEDGEMENTS

Report Prepared by:

Christopher M. Reh, M.S.
Industrial Hygienist
Industrial Hygiene Section

Matthew K. Klein, P.E.
Research Mechanical Engineer
Industrial Hygiene Section

Field Assistance:

Irving Sandy
Deputy
U.S. Marshals Service

Analytical Support:	DataChem Laboratories 960 LeVoy Drive Salt Lake City, Utah 84123
Originating Office:	Hazard Evaluations and Technical Assistance Branch Division of Surveillance, Hazard Evaluations and Field Studies
Report Typed By:	Sharon Jenkins Clerk (Typing) Industrial Hygiene Section

X. DISTRIBUTION AND AVAILABILITY OF REPORT

Copies of this report are temporarily available upon request from NIOSH, Hazard Evaluations and Technical Assistance Branch, 4676 Columbia Parkway, Cincinnati, Ohio 45226. After 90 days, the report will be available through the National Technical Information Service (NTIS), 5285 Port Royal, Springfield, Virginia 22161. Information regarding its availability through NTIS can be obtained from NIOSH Publications Office at the Cincinnati address. Copies of this report have been sent to:

1. Chief Deputy, U.S. Marshals Service
2. Deputy, U.S. Marshals Service
3. Space/Facilities Analyst, U.S. Marshals Service
4. Safety and Health Manager, U.S. Department of Justice
5. Ventilation Engineer, General Services Administration
6. NIOSH, Boston Region
7. OSHA, Region III

For the purpose of informing affected employees, copies of this report shall be posted by the employer in a prominent place accessible to the employees for a period of 30 calendar days.

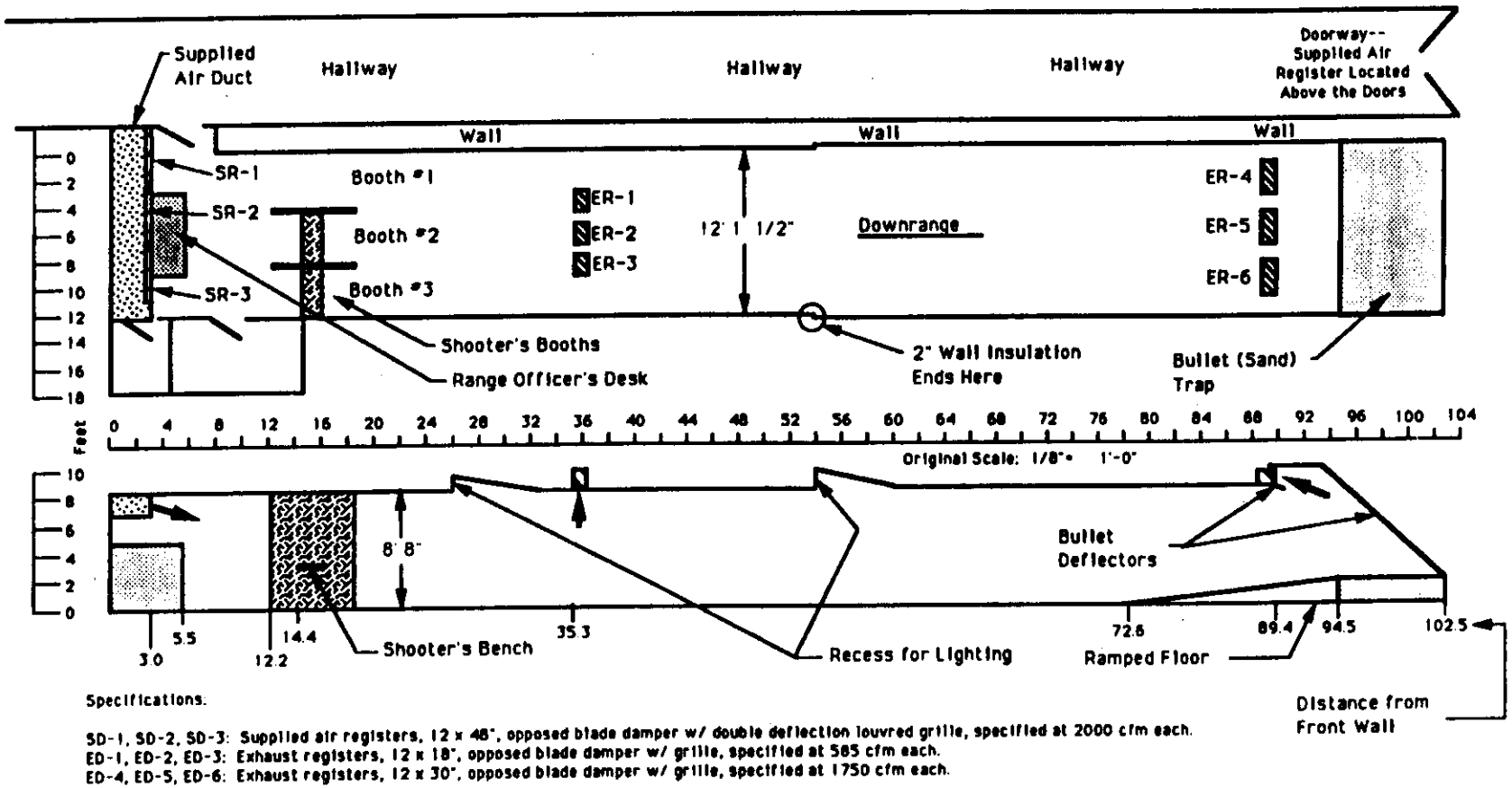

Specifications:

SD-1, SD-2, SD-3: Supplied air registers, 12 x 48", opposed blade damper w/ double deflection louvred grille, specified at 2000 cfm each.
ED-1, ED-2, ED-3: Exhaust registers, 12 x 18", opposed blade damper w/ grille, specified at 585 cfm each.
ED-4, ED-5, ED-6: Exhaust registers, 12 x 30", opposed blade damper w/ grille, specified at 1750 cfm each.

Figure 1. Schematic of the Indoor Firing Range.
U.S. Marshals Service
HETA 87-376
August 11-12, 1987

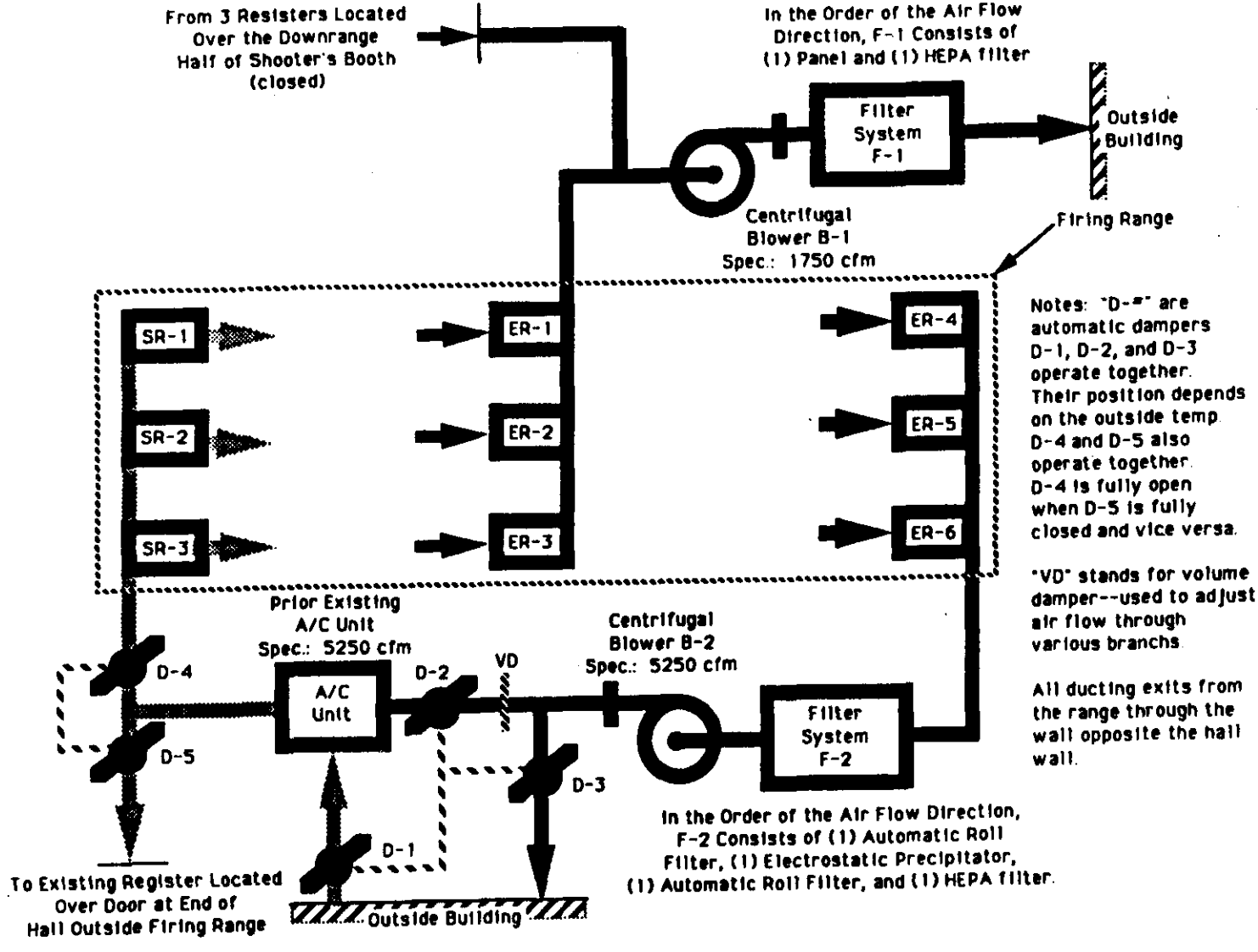

Figure 2. Schematic of Firing Range Ventilation System.
U.S. Marshals Service
HETA 87-376
August 11-12, 1987

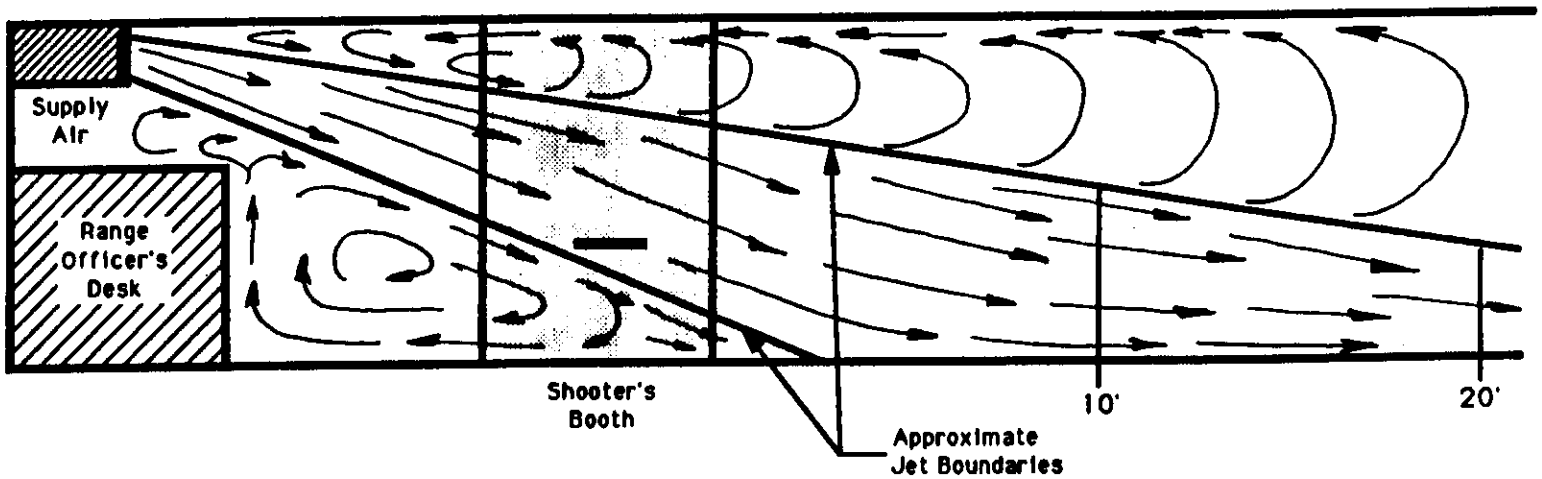

Figure 3. Air Currents Observed Using Smoke Machine.
U.S. Marshals Service
HETA 87-376
August 11-12, 1987

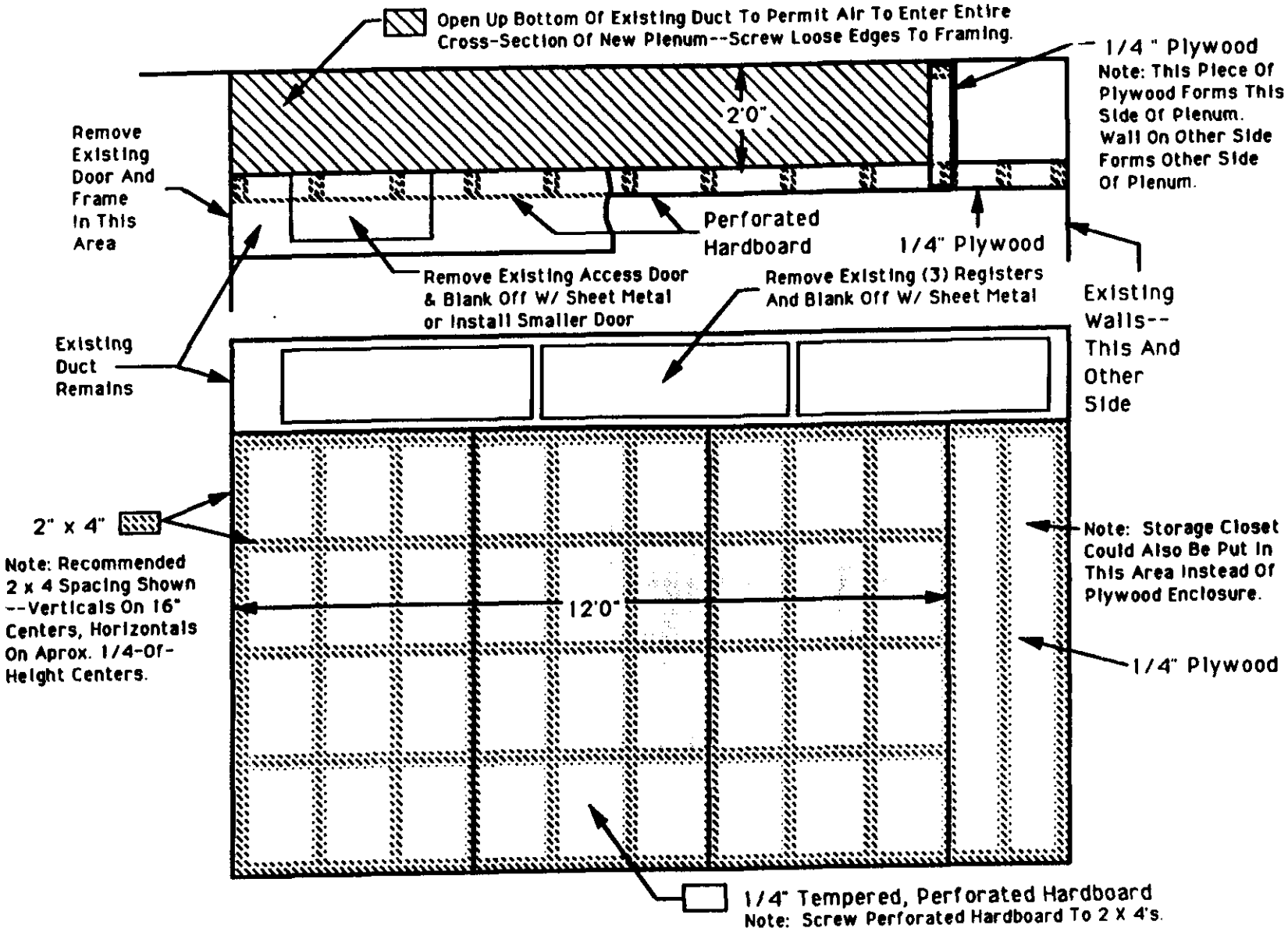

Figure 4. Proposed Changes to the Indoor Firing Range Ventilation System.
U.S. Marshals Service
HETA 87-376
August 11-12, 1987

Table 1

Data From Initial Survey
Personal Breathing Zone Air Sampling For Lead

U.S. Marshals Service
HETA 87-376

August 12, 1987

Sample Location	Sample Time	Sample Volume[1]	Concentration[2]
Range Officer	1058-1111	22	135
Range Officer	1111-1123	14	214
Range Officer	1123-1131	20	102
Range Officer	1131-1141	17	116
Booth 1	1058-1111	23	2594
Booth 1	1111-1123	15	3361
Booth 1	1123-1131	20	1669
Booth 1	1131-1141	18	668
Booth 2	1058-1111	24	1518
Booth 2	1111-1123	15	2342
Booth 2	1123-1131	21	1909
Booth 2	1131-1141	19	1374
Booth 3	1058-1111	22	823
Booth 3	1111-1123	14	1087
Booth 3	1123-1131	19	1141
Booth 3	1131-1141	17	1237

1 Sample volumes expressed in liters of air.

2 Concentrations expressed in micrograms of lead per cubic meter of air.
ND - none detected

Table 2

Summary Data From Initial Survey
8-Hour Time-Weighted Averages (TWAs) From Personal
Breathing Zone Air Sampling For Lead

U.S. Marshals Service
HETA 87-376

August 12, 1987

Sample Location	Average[1]	Range[1]	8-Hour TWA[1,2]
Booth 1	2073	668-3361	194
Booth 2	1786	1374-2342	167
Booth 3	1072	823-1237	101
Range Officer	142	102-214	13
OSHA PEL			50

1 Concentrations expressed in micrograms of lead per cubic meter of air.

2 8-hour TWA (time-weighted averages) calculated by assuming zero exposure to lead when not firing a handgun in the firing range.

Table 3

Data From Initial Survey
Area Air Sampling For Lead

U.S. Marshals Service
HETA 87-376

August 12, 1987

Sample Location	Sample Time	Sample Volume[1]	Concentration[2]
Above Booth 2	1057-1142	82	4494
Range Officer's Desk	1057-1142	77	131
Middle of Range	1057-1142	77	2353
Front of Sand Trap	1057-1142	77	2614

1 Sample volumes expressed in liters of air.

2 Concentrations expressed in micrograms of lead per cubic meter of air.

Table 4

Data From Initial Survey
Design and Actual Flowrates of Supply and Exhaust Air

U.S. Marshals Service
HETA 87-376

August 12, 1987

Register (See Figure 1)	Design Flowrate[1]	Actual Flowrate[1]
SR-1	2000	1190
SR-2	2000	1200
SR-3	2000	1200
ER-1	583	295
ER-2	583	295
ER-3	583	290
ER-4, 5, 6	5250	7000
Total Supply Air	6000	3590
Total Exhaust Air	6999	7880

[1] Flowrates expressed in cubic feet per minute of air (cfm).

Table 5

Data From Follow-up Survey
Personal Breathing Zone Air Sampling For Lead

U.S. Marshals Service
HETA 87-376

September 21, 1988

Sample Location	Sample Time	Sample Volume[1]	Concentration[2]
Range Officer	1400-1413	46	ND
Range Officer	1715-1725	35	ND
Range Officer	1728-1736	28	ND
Booth 1	1400-1413	46	1.7
Booth 1	1715-1725	35	ND
Booth 1	1727-1736	28	ND
Booth 2	1400-1413	46	ND
Booth 2	1715-1725	35	ND
Booth 2	1728-1736	28	ND
Booth 3	1400-1413	46	ND
Booth 3	1715-1725	35	ND
Booth 3	1728-1736	28	ND

1 Sample volumes expressed in liters of air.

2 Concentrations expressed in micrograms of lead per cubic meter of air.
ND - none detected

Table 6

Data From Follow-up Survey
Area Air Sampling For Lead

U.S. Marshals Service
HETA 87-376

September 21, 1988

Sample Location	Sample Time	Sample Volume[1]	Concentration[2]
Above Booth 1	1400-1434	58	310.3
Above Booth 1	1715-1736	42	ND
Above Booth 2	1400-1434	58	137.9
Above Booth 2	1715-1736	42	ND
Above Booth 3	1400-1434	58	275.9
Above Booth 3	1715-1736	42	71.4
Near Range Officer	1400-1434	58	ND
Near Range Officer	1715-1736	42	ND
Middle of Range	1400-1434	58	431.0
Bullet Sand Trap	1400-1434	58	2068.9
Diffuser in Hallway	1356-1736	59	ND
Airleak Near Fan	1352-1736	63	120.7

1 Sample volumes expressed in liters of air.

2 Concentrations expressed in micrograms of lead per cubic meter of air.
ND - none detected.