A PASSIVE MEANS TO DETECT HOT TROLLEY INSULATORS

M. R. Yenchek
A. J. Hudson

NIOSH
Pittsburgh, PA

ABSTRACT

Faulty insulators on mine trolley/track haulageways may allow the flow of leakage currents into the mine roof and ultimately result in combustion of the local roof material. The National Institute for Occupational Safety and Health (NIOSH), Pittsburgh Research Laboratory (PRL), has devised a passive means to detect overheating insulators on direct current systems. The detector consists of a spring-loaded cartridge that ejects a reflective streamer of white Teflon tape when subjected to elevated temperatures. The cartridge assembly can be easily installed over the outer metallic shell of an existing trolley line insulator. If an insulator overheats due to ground leakage currents, the visible streamer alerts mine personnel traveling on the haulageway.

INTRODUCTION

Electrical trolley systems are used for both mineral haulage and movement of personnel and supplies in nearly 50 U.S. mines, mostly in southwestern Pennsylvania and West Virginia. These systems use a trolley wire, energized at 300- or 600-V direct current, to power vehicles constrained to run on a network of permanently-installed steel track. The bare copper trolley wire along with a feeder wire are suspended about every six meters from insulators which are anchored into the roof by bolts. The purpose of the insulators is to prevent current from flowing to the grounded return track via the overlying strata.

Trolley insulators are expected to maintain dielectric strength in a dusty and wet environment. Coal and rock dust accumulations, as well as acidic drainage and condensation, may jeopardize insulator integrity. Leakage currents from the trolley wire into the roof strata can heat the insulator as well as the immediate area in which the suspended bolt is anchored. If not detected and corrected, this may result in ignition of roof coal and a catastrophic mine fire. The likelihood of such fires on dc trolley systems can be minimized if deteriorating insulators can be promptly detected and replaced.

An insulator and surrounding strata that are subject to leakage currents may be discolored, have an odor, or exhibit no physical evidence of deterioration. Leakage can be confirmed through voltage measurements across the insulator. But this can be a time-consuming, tedious task considering the thousands of insulators distributed over miles of haulageway. A portable infrared detector can be used to scan for heat on the insulators and in the roof from a slow-moving vehicle. This can be effective when done regularly but can not detect impending failures between examinations. An insulator, integrally designed to give some indication of the presence of leakage currents, could be detected and replaced promptly. Such a device using audio and visual techniques was conceptualized in prior research (Gillenwater and McCoy, 1981). However, the design effort never proceeded to the prototype stage due to product cost concerns.

This report documents the accomplishments of a research project supporting the NIOSH, PRL goal of enhancing the safety of the Nation's underground miners. The specific objective of this project was to devise a passive means to detect overheating insulators on mine trolley/track haulageways. The results of this work have the potential to minimize the incidence of overheating insulators and related fires on mine dc trolley systems.

GENERAL DESIGN CRITERIA

Trolley systems in underground coal mines are diminishing in number as new mines opt for belt haulage and diesel power. Consequently, those mines still employing trolley and track for haulage tend to be older with a limited operational life. The haulageways in these mines must still be maintained but there is little incentive from mine management's view for improvement. Wholesale replacement of system components such as insulators is simply not justified economically. Accordingly, any thermal indicating means for trolley insulators must be easily retrofitted on existing insulators. Also, it must be inexpensive compared to the cost of a new insulator.

To be effective in preventing fires, a thermal indicator must activate in the presence of leakage currents at the lowest practical temperatures. However, it must not react to other sources of heat such as idling mine locomotives. Reliability dictates that it be simple in both design and function. Ideally, it should be a passive device that requires no external power to operate. The same environmental contaminants that contribute to leakage currents must not interfere with indicator function. Finally, installation of the indicator on the insulator must not introduce new hazards.

APPROACHES

A number of thermal indicating concepts were considered at the outset. These included paint-filled capsules, an encapsulated liquid, a deflective polymer, a bimetallic strip, and a spring-loaded cartridge held in place with wax. Each was evaluated and critiqued for worthiness prior to construction of the prototype.

A preliminary idea involved mounting a clear fluoropolymer shroud around the insulator body (Figure 1). Paint-filled capsules would be contained within the shroud adjacent to the insulator housing. An overheating insulator would cause the shroud to shrink around the capsules. The capsules would be pierced by adjacent sharp protrusions, releasing paint over the exterior of the insulator. This passive technique had several advantages. It

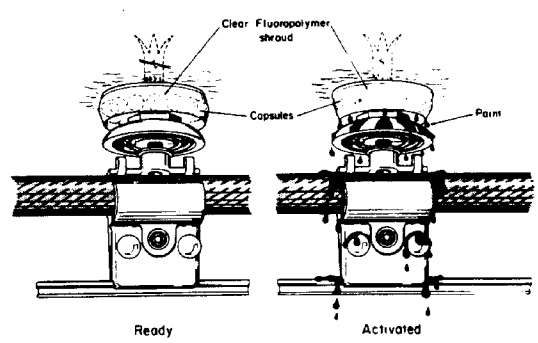

Figure 1. Thermal detection using point-filled capsules.

required no external power to activate and the shroud material was flame retardant. However, the capsule and shroud assembly would be difficult to install without removing the insulator from service. In addition, the paint might be difficult to detect once the shroud was covered with dust.

Another concept involved placing antifreeze inside a plastic tube which would be wrapped around the insulator body (Figure 2). Insulator leakage current would heat the antifreeze inside the tube. With sufficient internal pressure, a retaining cap would be ejected and a spool of Teflon tape would unroll. The weighted tape would unwind by gravity. This white reflective streamer flapping in the ventilating air would be easily visible to personnel traveling in vehicles. In addition, the antifreeze would remain liquid in areas of the haulage near the portal where temperatures may drop below freezing. But, no easy way could be found to retrofit the tubing on an insulator without losing fluid.

A third possible method featured a polymer disk which would be installed over the top of the insulator (figure 3). A cartridge containing a Teflon streamer would be mounted on top of the disk. When heated, this disk would deform and a wax seal inside the cartridge would melt. The seal is intended to keep dirt from fouling the streamer. The streamer would unroll by gravity. This simple concept required no external power. However, after careful consideration, it was felt that the wax would not reliably melt as the polymer disk was a poor heat conductor.

A fourth mechanism relied upon the movement of a bimetallic strip and gravity to activate a streamer. For maximum deflection, a spirally-wound strip was needed. An engineering analysis of this design showed that to produce an angular deflection in excess of 90° required a strip so large as to be impractical when mounted on an existing insulator (Crest Manufacturing Company Applications Manual, 1995).

The final concept envisioned, used a cartridge containing a spring-loaded streamer which was brazed to an adjustable hose clamp (figure 4). The clamp would be installed around the insulator housing. When leakage currents caused the insulator to become elevated in temperature, heat would be transferred via the clamp to the cartridge. Temperature-sensitive wax seals would hold the spooled streamer in place. At the melt temperature specified for the wax, the spring would eject the spooled streamer

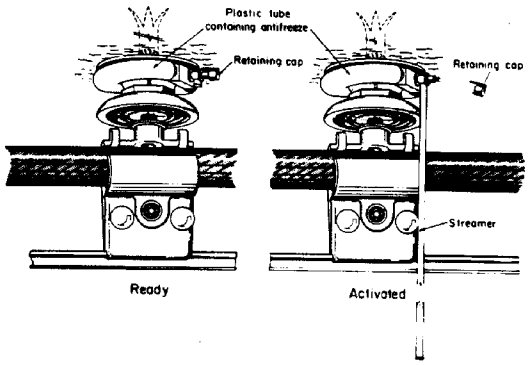

Figure 2. Thermal detection using pressurized liquid.

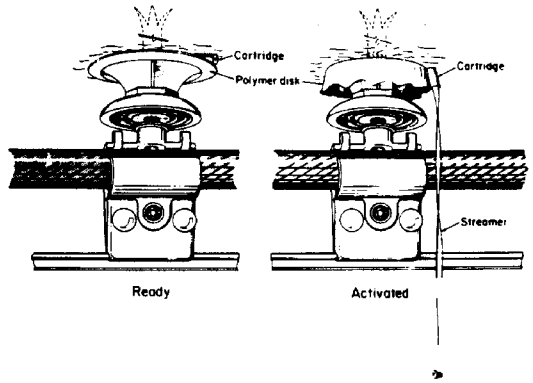

Figure 3. Thermal detection using deflective polymer disc.

out of the cartridge. Gravity would pull the nonconductive streamer downward where air currents along the haulageway would cause it to flutter noticeably. This design was simple in nature and was easy to install on insulators in service. It had the potential to be inexpensive, while providing a recognizable warning signal to vehicles traveling the haulageway. Consequently, it was the design of choice for the project. Reliability would subsequently be evaluated through prototype tests.

PROTOTYPE CONSTRUCTION

The assembly of the prototype is summarized here to facilitate understanding of the concept. A hose clamp with a suitable adjustment range was selected for the design. Made of stainless steel to prevent corrosion, this clamp should easily fit around commonly-used insulators. For economy, a 44-magnum brass cartridge was chosen to house the spring-loaded streamer. This cartridge was modified by enlarging the primer opening. Taking care not to deform its circumference, the brass cartridge was brazed to the clamp. A brass rod was then machined as a spool to fit within the cartridge. Teflon tape was carefully wound around the spool. This assembly was inserted into the cartridge along with a compressed stainless steel spring. A stainless steel machine screw and nut temporarily secured the spool and spring within the cartridge. A heat gun was used to affix wax in two locations. On the inside of the cartridge, a temperature-sensitive wax pellet was used as the trigger mechanism for the spring to eject the spool wound with the Teflon streamer. An exterior wax seal excluded dirt from inside the cartridge. The design was fully documented in a patent application (Hudson, 1996).

LABORATORY TESTS

The thermal indicator must react before heat generated by leakage currents through resistive paths can ignite nearby combustibles. These paths may be present on the surface of the insulator in the form of moisture and dirt. In the case of a cracked insulator, the resistive path for leakage current may be internal. In addition, heat may be generated in the roof as the current seeks

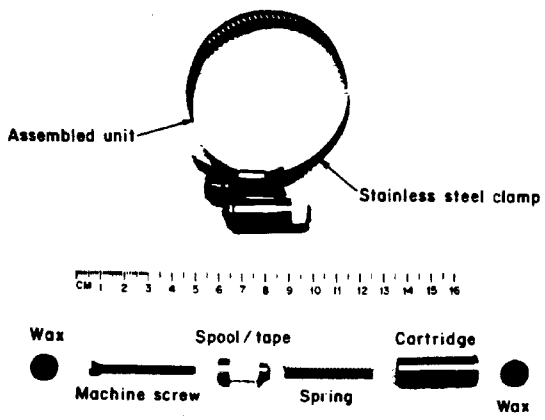

Figure 4. Hot insulator detector prototype.

to return to the grounded rail. To preclude ignition of coal dust accumulations on external surfaces of mechanical or electrical components, Title 30 of the Code of Federal Regulations imposes a 150 °C limitation (U.S. Code of Federal Regulations, 1993). In addition, some dc trolley insulator manufacturers specify a maximum operating temperature of 121 °C (Dubina, 1981). Due to thermal resistance, an indicator brazed to a clamp wrapped around the insulator housing will lag in temperature rise. Consequently, the temperature at which the device activates must be less than limitations imposed on the insulator housing. Laboratory tests were planned to quantify this temperature gradient and facilitate selection of the temperature rating for device activation. These tests would also demonstrate whether the thermal indicator was able to sense heat from below as well as above where it is mounted on the insulator.

A thermal indicator was installed on an insulator, suspended on a test stand. A 2-ohm, 250-W, wire-wound resistor was placed above the insulator to serve as a heat source. Type T, #24 AWG thermocouples were fixed at key locations on the insulator and detector (Figure 5). The thermocouples were connected to a 32-channel data logger that was programmed to read and transmit temperature data to a personal computer. Commercial data acquisition software was used to collect the data, display them in real time, and store them on a disk. With 30 V applied to the resistor, heat was generated above the insulator and, through conduction via the mounting bolt, was gradually transferred to the insulator and detector. Plots of temperature and time are shown in figure 6. It can be seen that with a heat source from above, the difference in temperature between the insulator housing under the clamp and the cartridge was approximately 35 °C. Similar results were obtained with the resistive heat source below the insulator. For maximum sensitivity, the temperature rating of the wax pellet was chosen at 65 °C. Thus, the streamer should activate before maximum rated insulator temperatures are reached regardless of the location of the heat source.

Additional tests were planned to gauge the reliability of the design. One hundred wax-sealed cartridges were constructed and mounted on a 1-m by 1.5-m aluminum panel (Figure 6). This panel was inserted into a 2.7-cu m air oven and the temperature in the oven was gradually increased from ambient at the rate of 25 °C per hr. Ninety-seven of the cartridges successfully ejected the Teflon streamer within ±5 °C of the target temperature of the wax. An examination of the three that failed to activate revealed deformities in the brass cartridges that hindered spool ejection. Careful packaging and handling of the device should preclude this damage in storage and transit.

Condensation may form on underground surfaces during the summer months when warm, humid air is drawn into the mine. This moisture may cause sudden arcing across trolley insulators, especially on 600-V systems. Laboratory tests were conducted to determine if the thermal indicator would activate in the presence of an electrical arc and if the indicator would be damaged by the arc. A 600-V direct current supply in PRL's Mine Electrical Laboratory was placed in series with 150 mH of inductance. Consisting of large air-core windings, this inductance simulated the electrical characteristics of a mine trolley/track haulageway. Its presence facilitates electrical arcs on these systems. In the laboratory, the arc was initiated by placing a #18 AWG fuse wire between the insulator outer housing and center threaded stud. Upon energization, the fuse wire quickly melted leaving an ionized path for the electrical arc. This arc was maintained for 4 to 5 sec. During this time there was significant erosion of the insulator stud and housing. The rapidly escalating heat activated the insulator detector nearly instantaneously. In some cases the Teflon streamer remained intact after arc interruption. However, most of the time the arc energy severed the streamer and it fell to the ground. Consequently, the insulator detector cannot be effective in the case of an arcing trolley insulator.

ADDITIONAL TEST RECOMMENDATIONS

It is recommended that the prototype clamp and cartridge assembly undergo additional tests (Trelewicz, 1981) to determine

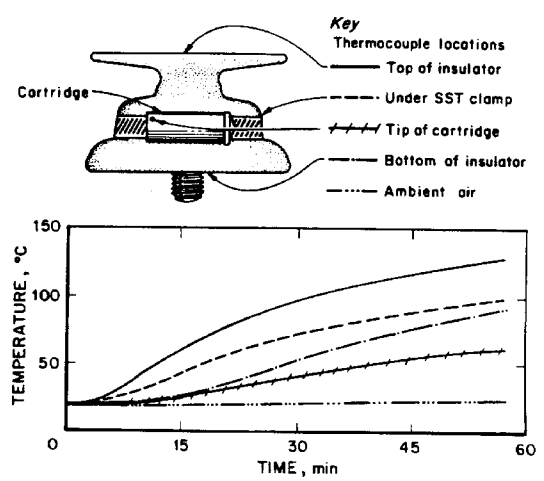

Figure 5. Temperature gradients with heat source above insulator.

Figure 6. Fired cartridge following test in air oven.

appropriateness for mine duty. These tests, in accordance with MIL Std 810C (Military Standard 810C, 1984), include high and low temperature which approximate the cyclic temperature extremes (-29 to +38 °C) that may be experienced during storage and operation. In addition, a thermal shock test should be conducted to determine the effect of sudden changes in these temperature extremes. To measure the effect of warm humid air, the indicator should be subjected to 38 °C at 95% humidity. A mechanical shock test would gauge the ability of the device to withstand drops of up to 91.5 cm that may occur during shipment. A vibration test of 1.5 g up to 200 Hz would simulate the motion of common carrier shipping. The device should be exposed to dust concentrations of 10 mg per m^3 at both 91.4 and 533.4 m per min and their effects on operation noted. A corrosion test per ASTM Standard B117 (The American Society for Testing and Materials, 1995) with an acidified spray would complete the evaluation of the assembly. Following exposure, the assembly operation should be tested through exposure to heat. Once installed on an insulator, a dielectric strength test (American National Standards Institute (ANSI) C59.48, 1994; Institute of Electrical and Electronic Engineers (IEEE), Standard No. 4, 1995) should be conducted to determine if the addition of the metallic clamp and assembly affects the original insulation qualities of the insulator.

SUMMARY AND CONCLUSIONS

The NIOSH, PRL has devised a passive means to detect overheating insulators on mine trolley/track haulageways. The detector consists of a spring-loaded cartridge that ejects a reflective streamer of white Teflon tape when subjected to elevated temperatures. The adjustable activation temperature of the cartridge is determined by the melting of a wax seal. The cartridge assembly is attached to a stainless steel clamp that can be easily installed over the outer metallic shell of an existing trolley line insulator. When an insulator overheats due to ground leakage currents, the visible streamer alerts mine personnel traveling on the haulageway. Laboratory tests showed that when installed on an insulator, the device can effectively warn of the presence of heat from above and below. Air-oven tests established the reliability of a 100-sample lot of the spring-loaded cartridges at approximately 97%. However, the Teflon streamer may not remain intact should the insulator be subject to arcing. Such faults on mine trolley systems are better detected by a neural network-based algorithm recently devised at PRL (Peterson and Cole, 1997). Nevertheless, implementation of the research documented in this report has the potential to minimize the incidence of overheating insulators and related fires on mine dc trolley systems.

REFERENCES

American National Standards Institute (ANSI) C59.48, 1994, "Dielectric Breakdown Voltage and Dielectric Strength of Electrical Insulating Materials at Commercial Power Frequencies," 26 pp.

Crest Manufacturing Company Applications Manual, 1995, Lincoln, RI, p. 9.

Dubina, S. F., 1981, Standard for Direct Current Trolley Insulators. MSHA Investigative Report No. L-120781-3, p. 13.

Gillenwater, B., McCoy J., 1981, "Innovative Techniques in Trolley Line Power Distribution" (contract J0188083, Foster-Miller Associates, Inc.). BuMines OFR 49-82, 76 pp.

Hudson, A. J, 1996, Heat-Sensitive Warning Device. Patent Application MIN/PGH-9604, 17 pp.

Institute of Electrical and Electronic Engineers (IEEE), Standard No. 4, 1995, "IEEE Standard Techniques for High Voltage Testing," 144 pp.

Military Standard 810C, 1984, Environmental Test Methods and Engineering Guidelines, 145 pp.

Peterson, J. S., Cole, G.P., 1997, "Detection on Downed Trolley Lines Using Arc Signature Analysis," NIOSH, PRL Report of Investigation No. 9639, 10 pp.

The American Society for Testing and Materials, 1995, Standard B117-95, Practice for Operating Salt Spray (Fog) Apparatus. Section 3-Metal Test Methods, Vol. 03.02, Wear and Corrosion, Metal Corrosion, p. 1-8.

Trelewicz, K., 1981, "Environmental Test Criteria for the Acceptability of Mine Instrumentation" (contract J0100040, Dayton T. Brown, Inc.), BuMines OFR, 135 pp.

U.S. Code of Federal Regulations, 1993, Title 39--Mineral Resources; Part 18--Electric Motor-Driven Mine Equipment and Accessories; Subpart B--Construction and Design Requirements, Section 18.23--Limitation of External Surface Temperatures, p. 104.