Detection of A-C Machine Winding Deterioration using Electrically Excited Vibrations

F. C. Trutt
University of Kentucky
Lexington, KY 40506 USA

J. Sottile
University of Kentucky
Lexington, KY 40506 USA

J. L. Kohler
National Institute of Occupational Safety and Health
Pittsburgh, PA 15236 USA

Abstract - **Presented in this paper is a theoretical review of the relationships that should exist between electrical winding parameters and the mechanical vibration of a-c machine elements under normal and faulted operating conditions. Also included is data from an experimental study that relates stator vibration and bearing vibration to selected winding faults in a synchronous machine. Consideration of these results indicates a significant relationship between electrical deterioration and mechanical vibration and thus provides the motivation for additional study and a basis for future applications.**

I. Introduction

Studies relating to the detection of electrical winding faults in rotating machines have normally been oriented towards the measurement and analysis of electrical parameters such as current, voltage and magnetic flux [1-8]. Conversely, efforts to apply mechanical vibration technology in the condition monitoring of ac motors and generators have generally been focused on areas relating to unbalance, bearing condition, eccentricities, and other mechanical phenomena [9,10]. However, theory predicts that current changes due to electrical winding deterioration in rotating machines will alter internal magnetic forces which will then cause a modification in vibration characteristics [11,12]. The monitoring of mechanical vibration should therefore be a useful indicator of electrical winding condition.

While the application of these concepts in the protection of rotating machinery have been considered for many years [13-15], the major emphasis has been to study the relationships between winding faults and electrical parameters. However, an understanding of the relationships between mechanical vibrations and electrical winding deterioration could provide a means for supplemental monitoring of electrical winding integrity as well as information that might be used to discriminate between electrical and mechanical problems.

This paper begins with a theoretical review of the relationships that should exist between electrical winding currents and the mechanical vibration of machine elements under normal and faulted operating conditions. Data from an experimental study that relates stator vibration and bearing vibration to selected winding faults in a synchronous machine are then presented. Results demonstrate a measurable relationship between electrical deterioration and mechanical vibration and thus provide the motivation for additional study and a basis for monitoring applications.

II. Theoretical Justification

The theoretical motivation for the use of mechanical vibration measurements for the detection of electrical winding faults follows that given in [11] and will be presented by considering the total airgap mmf to be composed of the sum of the individual mmfs of each coil in the machine. In this manner, the mmfs that would exist during either normal or faulted conditions may be represented. Since the flow of current in a single coil of a machine produces a series of space harmonic waves, the airgap mmf due to the nth stator coil may be represented as

$$F_n = \sum_{k=1}^{\infty} K_w N_n i_n Cos(kpy + \varphi_n) \qquad (1)$$

where K_w is a magnitude coefficient, N_n is the number of series turns in the coil, p is the number of pole pairs, k is the order of a space harmonic, φ_n is a phase angle representing the space position of the coil axis, y is the space position in the airgap, and i_n is the time varying current flowing in the nth stator coil. In general, this current may consist of a fundamental plus time harmonics. For mmfs due to current in a rotor coil, the effect of rotor velocity must be included and (1) is made to rotate at the rotor mechanical speed ω_r.

The airgap permeance is represented as a sum of time varying sinusoidal space functions in order to allow for saliency. This permeance function has a component due to rotor slotting that moves with the rotor and the total airgap permeance may be represented as

$$P_a = \sum_{i=0}^{\infty} \sum_{j=0}^{\infty} P_{ij} Cos\{(iK_r Z_r \pm jK_s Z_s)y - iK_r \omega_r t\} \qquad (2)$$

where i and j are integers, ω_r is the rotor speed, Z_r and Z_s are rotor and stator slot numbers, and the K_r, K_s, and P_{ij} are

appropriate constants. It should also be noted that dynamic rotor eccentricity and/or dissymmetries in rotor and/or stator shape may also be included in this function.

The airgap flux density is equal to the product of the mmf and the permeance. The individual coil mmf's given in (1) may then be multiplied by the airgap permeance (2) and this result may be summed over all the coils in the machine to obtain the resultant airgap flux density. Thus, for example, a three phase machine having 100 distributed coils in each phase of the stator would have 300 terms as given in (1), each term having enough space harmonics to appropriately represent the coil's rectangular mmf space distribution. Rotor coils must also be included in the summation. The resulting representation of the airgap flux density therefore includes many terms, each of which has a time varying amplitude and is sinusoidally distributed in space.

The electrically excited force wave acting on the the machine members is given as

$$W_s = \frac{B^2}{2\mu_0} \tag{3}$$

where B is the airgap flux density discussed in the previous paragraph. Evaluation of (3) yields a complicated function of the space position in the airgap, the individual coil currents, machine saliency, and the space harmonics of each coil mmf. This expression is given in [11] and [12] and will not be repeated here. For our purposes, it is sufficient to realize that the many terms in this force function are each sinusoidal in nature and that each term represents a force component acting over a particular space distribution and at a certain frequency. These forces act upon the rotor and the stator of the machine and the resulting mechanical responses to these forces constitute its electrically excited vibration spectrum. Since these forces are dependent upon the individual coil currents, changes in these currents with winding faults or deterioration as demonstrated in [16] and [17] should produce corresponding changes in the airgap flux density and hence the electrically excited forces acting on the machine members. The manner in which the mechanical structure responds to these force changes should be a critical factor in the use of vibration monitoring for the detection and evaluation of winding deterioration.

The dynamic response of the machine members at the frequencies present in the electrically excited force wave depends upon a number of parameters including their elasticity, geometry, natural frequencies, damping characteristics, and vibration modes. Although some of these quantities are difficult to determine accurately for a given machine, it is known that forces acting at a frequency near a natural frequency of a structure will produce more dramatic motion responses than those that may act at more highly damped frequencies. Increases or decreases in force magnitudes should also be observable.

Based upon these theoretical considerations, its seems clear that the changes in winding and coil currents due to electrical winding faults or deterioration will be reflected in the spectrum of the forces acting on the stator and rotor of a rotating machine. Measurement of the mechanical vibrations of the machine structure in response to these changes therefore provides a potential means for the monitoring of electrical winding condition. This method of condition monitoring could be particularly useful if the force changes due to winding deterioration are of large magnitude or if they occur near a natural frequency of a machine member.

III. Experimental Study

The experimental study was carried out on two machines that were constructed to allow for the simulation of stator and/or rotor winding faults and the subsequent measurement of stator and bearing vibration. The first of these is a universal laboratory machine (ULM). The second system is a specially constructed three-phase "brushless" synchronous generator.

The universal laboratory machine set is composed of a two-pole universal machine that is mechanically connected to a dc dynamometer. For the purposes of this investigation, the ULM was connected as a 2-kva 115-V 60-Hz 3600-rpm three-phase synchronous alternator. The dynamometer was connected as a 110V dc shunt motor and the motor field current was adjusted for a mechanical speed of 3600 rpm.

The stator winding of the universal laboratory machine consists of 12 coils that may be interconnected in various ways in order to create different stator winding configurations. For the experiments to be described, four of these stator coils were connected in series to form each phase of a balanced wye-connected three-phase armature. With these connections, the machine can be operated as a normal 3600-rpm alternator or the junction points between coil connections can be used to simulate turn-to-turn stator winding deterioration as shown in Fig. 1. Phase-to-phase faults may also be simulated. While the rotor is accessible through brushes and slip rings as a single coil per pole, there is no effective method to simulate rotor field winding deterioration in this 2-pole machine and the rotor excitation therefore consisted of a constant value of dc current applied through the brushes.

For the first series of tests that will be presented, the ULM was run as a loaded synchronous generator at synchronous speed. Stator coil-to-coil winding deterioration was introduced as shown in Fig. 1 and the resistance R_d was varied in order to adjust the deterioration current I_d. For all the levels of deterioration that were simulated, the machine still appeared to be running normally and no abnormal heating was apparent.

In order to collect vibration information, one accelerometer was mounted on a rotor bearing and another accelerometer was mounted on the stator stack of the machine under test. Since the frequencies of interest were less than 1kHz, magnetic mounts were utilized with anti-aliasing filtering having a cutoff frequency of 1.125kHz. Filter outputs were then sampled at a rate of 5128 samples/s

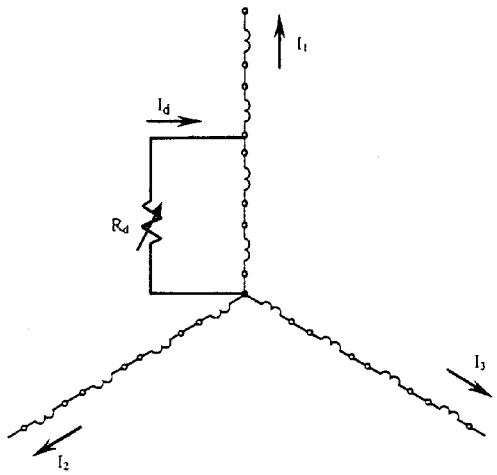

Fig. 1. ULM stator winding with simulated deterioration.

and this data was transferred to a laptop computer for analysis.

An acceleration frequency spectrum measured at the stator stack by one of the magnetic mount accelerometers was then analyzed for both normal operation and for a moderate amount of deterioration current I_d. Results showed measurable differences, particularly at 180Hz and 480Hz. To further investigate this situation, testing was conducted for levels of deterioration current from 0-2A. While no major changes in output voltages or currents were observed, increases in stator vibration occurred as shown in Fig. 2. In this figure, the stator accelerations at 180Hz and 480Hz plus the negative sequence load current are plotted as a percentage of their values with no deterioration vs. deterioration current. The 200% increase in measured stator acceleration at 480Hz and the 90% increase at 180Hz seem to indicate a clear relationship between these parameters and stator coil-to-coil deterioration. These changes appear particularly significant when compared with the 10% increase that was observed in the negative sequence component of the load current.

Similar results may be observed for other types of stator faults in the ULM but limitations of the universal machine for this investigation included the inability to simulate rotor winding deterioration as well as the requirement that 25% of a stator phase winding must be involved in a fault simulation. In an effort to circumvent these difficulties, a specialized alternator system was constructed.

Major components of this specialized alternator system include a 4-pole 6.25kva 240V three-phase generator with a "brushless" excitation system that is directly coupled to a 7.5hp 1800rpm 60Hz brushless synchronous motor. Also included is the appropriate exciter for each unit as well as the circuitry for alternator voltage regulation and motor speed control. The stator of the alternator is wye connected with two parallel paths per phase. Each stator winding has externally accessible taps at 1, 2, 3, 4, 5, 10, 21, 42, and 68%

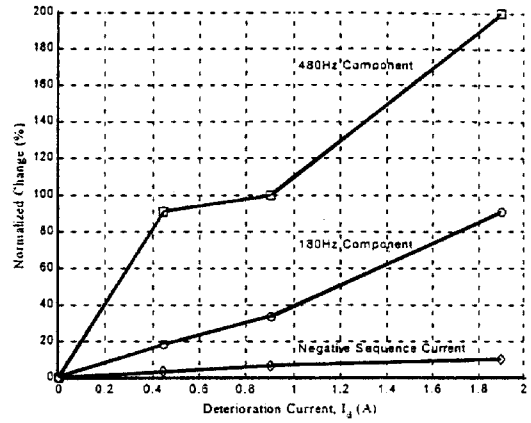

Fig. 2. Measured parameters vs. deterioration in the ULM.

of the coil. Thus internal winding or phase-to-phase stator deterioration involving as little as 1% in one parallel path of a winding may be simulated.

On the rotor, taps are available at 0, 5, 10, 25, 50, 100, 200, 350 and 500 turns on one pole of a rotor winding that has 500 series turns/pole (2000 total turns in series). These taps are externally accessible when the rotor is stationary such that rotor deterioration may be introduced prior to startup. Although the structure of the alternator excitation system is brushless in nature, brushes and slip rings have also been provided so that access to the generator exciter output, rectifier diodes, and the actual field voltage and current is available. Thus these parameters may be measured while the alternator is running and hence the "brushless" connotation. The structure of this alternator system is illustrated in Fig. 3.

While it has been possible to show similar results for stator winding deterioration with the three phase "brushless" experimental generator, it is more interesting to investigate the consequences of rotor winding deterioration in this alternator since such a study was not feasible using the universal machine. For this experiment, deterioration was simulated by shorting 0-100 turns on the tapped rotor pole. In this manner, rotor winding short circuits involving a maximum of 5% of the total rotor winding were created. The actual dc current that was shunted from the field winding through these short-circuit connections was limited in practice to the range of 2-3A because of connection resistances and other factors. Thus it was only possible to divert 80-90% of the normal dc field current using this approach. Once again, no appreciable changes in the output voltages or currents were observed as rotor-winding deterioration was added.

An acceleration frequency spectrum measured by an accelerometer located at a rotor bearing was then analyzed for normal operation and varying amounts of rotor winding deterioration. Results showed that a significant increase in he magnitude of bearing vibration occurs at a frequency of 30Hz when the deterioration is added. If this acceleration

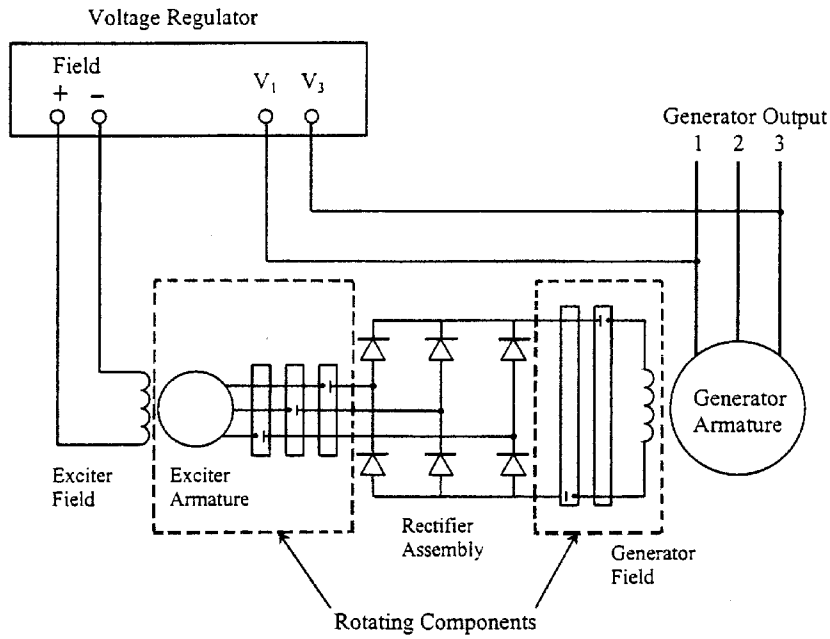

Fig. 3. Simplified schematic diagram of experimental "brushless" synchronous generator.

parameter is divided by its value under normal operating conditions and then plotted as a function of the number of shorted turns, Fig. 4 is obtained. From this figure, it may be seen that only slight additional increases in 30-Hz vibration were obtained as the number of shorted turns were extended from 10 to 100. This result may be related to the difficulty in diverting more than 2-3A from the field winding. This fault current was relatively constant and nearly independent of the number of shorted field winding turns. However, the increase in the 30-Hz component of acceleration was evident in all cases.

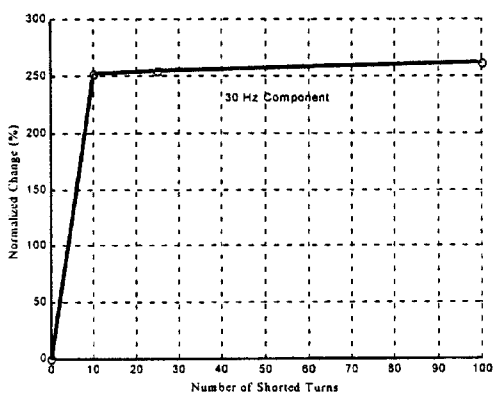

Fig. 4. Bearing vibration vs. rotor winding deterioration.

IV. Conclusion

In order to develop reliable systems for the detection and classification of deterioration in ac machines, it seems logical that all sources of information should be utilized. This is particularly true since each predictor will have its own unique characteristics and could contribute data that may not otherwise be available. In this paper, theoretical and experimental motivation has been presented for the consideration of mechanical vibration predictors as an indicator of electrical winding deterioration in rotating machines. Based upon the results of this study, it is recommended that the relationships between electrical winding faults and mechanical vibration be investigated in greater detail and that the potential application of such predictors in continuous monitoring systems be considered.

References

[1] G. B. Kliman, W. J. Premerlaini, R. A. Koegl, and D. Hoeweler, "A new approach to on-line turn fault detection in ac motors," Conference Record of the IEEE Industry Applications Society, vol. 1, pp. 687-693, 1996.

[2] Hamid A. Toliyat and Thomas A. Lipo, "Transient analysis of cage induction machines under stator, rotor bar and end ring faults," *IEEE Trans. on Energy Conversion*, vol. 10, no. 2, pp. 241-247, June 1995.

[3] Randy R. Schoen and Thomas G. Habetler, "A new method of current-based condition monitoring in induction machines operating under arbitrary load conditions," *Electric Machines and Power Systems,* vol. 25, pp. 141-152, 1997.

[4] J. Penman, H. G. Sedding, B. A. Lloyd , and W. T. Fink, "Detection and location of interturn short circuits in the stator windings of operating motors," *IEEE Trans. on Energy Conversion,* vol. 9, no. 4, pp. 652-658, Dec. 1994.

[5] A. J. M. Cardoso, S. M. A. Cruz, and D. S. B. Fonseca, "Inter-turn stator winding fault diagnosis in three-phase induction motors by Park's vector approach," Conference Record of the IEEE International Electric Machines and Drives Conference, Milwaukee, WI, pp. MB1-5.1-MB1-5.3, 1997.

[6] L. Pazamandi. "Stator earth-leakage protection for large generators, *IEEE Trans. on Power Apparatus and Systems,* vol. 94, no. 4, pp. 1436-1439, Jul./Aug. 1975.

[7] J. W. Pope, "A comparison of 100% stator ground fault protection schemes for generator stator windings," *IEEE Trans. on Power Apparatus and Systems,* vol. 103, no. 4, pp. 832-840, April 1984.

[8] D. W. Auckland, I. E. D. Pickup, R. Suttleworth, and Y. T. Wu, "Novel approach to alternator field winding interturn fault detection," *IEE Proc. On Generation, Transmission and Distribution,* vol. 142, no. 2, 1995.

[9] Ronald L. Eshleman, *Machinery Vibration Analysis II,* VIPress, Inc., 1996.

[10] John T. Renwick and Paul E. Babson, "Vibration analysis - a proven technique as a predictive maintenance tool,' *IEEE Trans. on Industry Applications,* vol. 21, no. 2, March/April 1985.

[11] S. J. Yang, *Low-Noise Electrical Motors,* Oxford University Press, 1981.

[12] F. Ding and F. C. Trutt, "Calculation of frequency spectra of electromagnetic vibration for wound-rotor induction machines with winding faults," *Electric Machines and Power Systems,* vol. 14, pp. 137-150, 1988.

[13] R. L. Webb and C. S. Murray, "Vibration protection for rotating machinery." *Trans. of the IEEE,* vol. 63, pp. 534-537, 1944.

[14] A. Gayland, A. Meyer, and C. Landy, 'Acoustic evaluation of faults in electric machines," Conference Record – Electric Macines and Drives, IEE Pub. No. 412, pp. 147-150, Sep. 1995.

[15] Tommy W. S. Chow, "Condition monitoring of electric machines using third-order spectrum analysis," Conference Record of the IEEE Industry Applications Society, vol. 1, pp. 679-686, 1996.

[16] S. Williamson and K. Mirzoian, "Analysis of cage induction motors with stator winding faults," *IEEE Trans. on Power Apparatus and Systems,* vol. 104, pp. 1838-1842, 1985.

[17] F. C. Trutt, "Steady-state analysis of wound rotor induction machines with simultaneous stator and/or rotor faults," *Electric Machines and Power Systems,* vol. 16, pp. 35-48. 1989.