Additional Information

Contact the Massachusetts Fatality Assessment and Control Evaluation Project (MA FACE) or the Occupational Safety and Health Administration (OSHA)

MA FACE Project
Occupational Health Surveillance Program
Massachusetts Department of Public Health
250 Washington Street
Boston, MA 02108-4603
(617) 624-5627

OSHA Consultation Program
Mass. Department of Labor and Workforce Development, Division of Occupational Safety
(617) 969-7177

OSHA Regional Office
JFK Federal Building,- Room E340
Boston, MA 02203
(617) 565-9860

FACE is an occupational injury prevention project conducted by the Massachusetts Department of Public Health; it is not responsible for enforcement of safety standards. FACE investigates workplace fatalities with the aim of identifying risk factors that lead to fatal injury.

The FACE Project is funded by the National Institute for Occupational Safety and Health (NIOSH).

Many thanks to the contractors and others who helped develop this brochure.

SCAFFOLD SAFETY
For Residential Construction Contractors

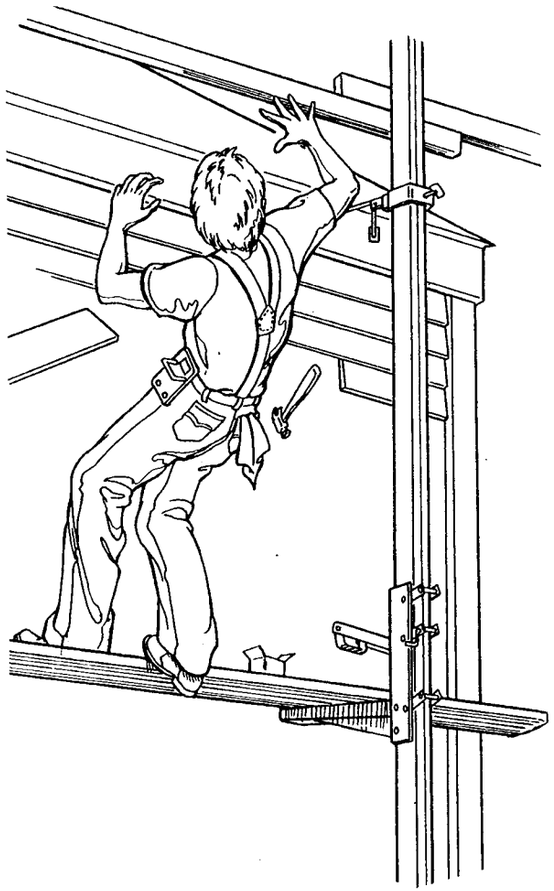

Massachusetts Department of Public Health
Fatality Assessment and Control Evaluation Project
(FACE)

Any Fall Can Be Fatal!

Scaffolds can provide a safer and more efficient way to work in home building and renovation. But scaffolding must be properly set up. The majority of construction workers who fall to their death in Massachusetts fall from scaffolds.

A 29 year old carpenter fell 19 feet to his death from an unguarded carpenter's bracket scaffold attached to a window frame of a home. The carpenter was scraping snow off the roof. He slipped off the platform as snow accumulated around his feet.

A 69 year old mason renovating a single family home fell 20 feet from an unguarded pipe scaffold. The staging was set 10 feet from the house due to a second floor deck, and a plank walkway had been rigged for roof access. The mason fell to his death when the plank slipped.

General Provisions for All Scaffolds:

- **Provide access ladder**
- **Use scaffold grade lumber**
- **Install guardrails and toeboards on all scaffolds 10 feet above the ground**
- **Train all personnel in safe use**
- **Ensure structure is capable of supporting 4 times the maximum intended load, including its own weight**
  For example: a pump jack scaffold with poles placed 10 feet apart and two 2"x10" scaffold grade planks will be strong enough to hold up to 500 pounds, including people and equipment.

Pump Jack Scaffold:

- Use wooden poles up to 30 feet; aluminum poles up to 50 feet
- Install guardrails. Workbench may serve as top guardrail
- Secure poles to house with rigid triangular bracing at the top, bottom, and other points as necessary
- Make sure poles are plumb
- Platforms brackets should be fully planked and secured
- Do not sit or stand on workbench platforms

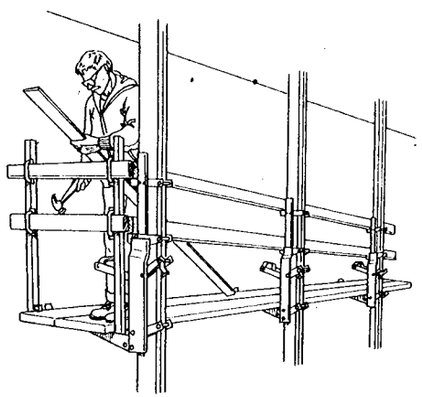

Caution:
Spliced 2x4 poles often slip when wet.

Ladder Jack:

- Do not use over 20 feet in height
- Platforms should be a minimum of 12 inches wide. Do not bridge platforms to each other
- Secure ladders to prevent slipping
- Provide access ladder

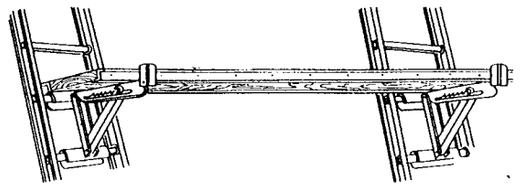

Caution:
The least safe of all staging types. Try to minimize use. OSHA now requires fall protection to be used on these scaffolds.

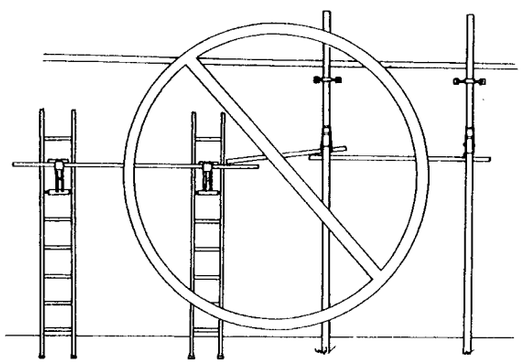

Caution:
Never combine pump jack scaffolds with ladder jacks unless you do not intend to adjust the height of the pump jack.

Carpenter's Bracket:

- Platform must be a minimum of 12 inches
- Ensure brackets are attached to the stud or structural member of building

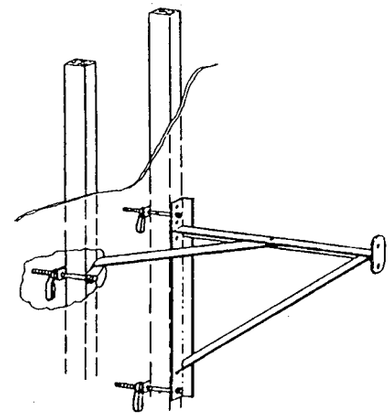

- Install guardrails

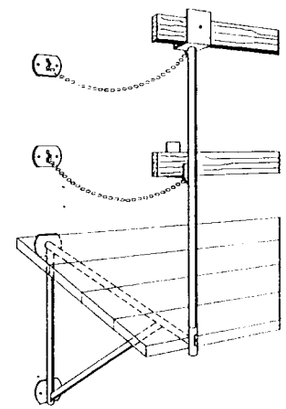

Inexpensive guardrail holders are available for all types of scaffolds

Tubular Welded:

- Assemble scaffold by qualified person
- Cross brace the scaffold
- Secure to building
- Install guardrails
- Provide access ladder
- Fully plank

Caution: *Careful footing is critical for the stability of these scaffolds.*

Beware of electrocution hazard when assembling, using, or dismantling scaffolds near power lines

Call electric company for assistance

This brochure highlights key points. Consult the OSHA standard CFR 29, Subpart L, 1926.450-454 for a complete list of safety requirements.

Ask your retailer or rental agency for specific assembly and safety instructions for your particular scaffold.