CDC

Workplace Safety and Health

# Asphalt Fume Exposures During the Manufacture of Asphalt Roofing Products

## Current Practices for Reducing Exposures

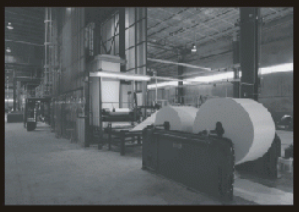

DEPARTMENT OF HEALTH AND HUMAN SERVICES
Centers for Disease Control and Prevention
National Institute for Occupational Safety and Health

NIOSH

# ASPHALT FUME EXPOSURES DURING THE MANUFACTURE OF ASPHALT ROOFING PRODUCTS

## Current Practices for Reducing Exposures

**DEPARTMENT OF HEALTH AND HUMAN SERVICES**
Centers for Disease Control and Prevention
National Institute for Occupational Safety and Health

**August 2001**

**This document is in the public domain and may be freely copied or reprinted.**

## DISCLAIMER

Mention of any company or product does not constitute endorsement by NIOSH.

## ORDERING INFORMATION

To receive documents or more information about occupational safety and health topics, contact the National Institute for Occupational Safety and Health (NIOSH) at

NIOSH—Publications Dissemination
4676 Columbia Parkway
Cincinnati, OH 45226–1998

Telephone: **1–800–35–NIOSH** (1–800–356–4674)
Fax: 1–513–533–8573
E-mail: pubstaft@cdc.gov

or visit the NIOSH Web site at **www.cdc.gov/niosh**

**DHHS (NIOSH) Publication No. 2001–127**

# FOREWORD

The Occupational Safety and Health Act of 1970 (Public Law 91–596) assures, insofar as possible, safe and healthful working conditions for every working man and woman in the Nation. The act charges the National Institute for Occupational Safety and Health (NIOSH) with recommending occupational safety and health standards and describing exposure concentrations that are safe for various periods of employment—including but not limited to the concentrations at which no worker will suffer diminished health, functional capacity, or life expectancy as a result of his or her work experience.

This document represents the collaborative efforts of industry, labor, and government to protect the health of workers exposed to asphalt fumes during the manufacture of asphalt roofing products. Current engineering controls and work practices are presented for reducing worker exposures to asphalt fumes during the manufacturing process. These prevention methods are the cornerstone of public and occupational health.

This document is the result of a public meeting convened on July 22 and 23, 1996, in Cincinnati, Ohio. Participants discussed engineering controls and work practices for controlling exposures to asphalt fumes in the roofing industry. Although the health risks from asphalt exposure are not yet fully defined, all partners agreed that prudent action was needed to reduce worker exposures. They decided to produce a joint document that would describe engineering controls and work practices to reduce worker exposure to asphalt fumes during the manufacture of asphalt roofing products. The willingness of all partners to work together in this effort should serve as a model for others who are developing occupational safety and health recommendations. This document was truly a joint effort. I would like to thank the National Roofing Contractors Association (NRCA), the Asphalt Roofing Manufacturers' Association (ARMA), the Asphalt Institute (AI), and the United Union of Roofers, Waterproofers, and Allied Workers for their cooperation and hard work.

Kathleen M. Rest, Ph.D., M.P.A.
Acting Director, National Institute for
Occupational Safety and Health
Centers for Disease Control and Prevention

# ABSTRACT

This document represents a collaborative effort of the National Institute for Occupational Safety and Health (NIOSH), the National Roofing Contractors Association (NRCA), the Asphalt Roofing Manufacturers' Association (ARMA), the Asphalt Institute (AI), and the United Union of Roofers, Waterproofers, and Allied Workers to reduce worker exposures to asphalt fumes during the manufacture of asphalt roofing products. The document describes the manufacturing process, identifies steps in the process with the potential for asphalt fume exposure, and identifies current engineering control methods and work practices used to reduce exposures. In addition, the document lists relevant research needed for further reducing asphalt fume exposures during the manufacture of asphalt roofing products.

## CONTENTS

Foreword . . . . . iii
Abstract . . . . . iv
Abbreviations . . . . . vii
Glossary . . . . . ix
Acknowledgments . . . . . xi

1. INTRODUCTION . . . . . 1

2. BACKGROUND . . . . . 2
   2.1 Composition and Uses of Asphalt . . . . . 2
   2.2 Manufacture of Asphalt Roofing Products . . . . . 2
   2.3 Manufacture of Roofing Asphalts . . . . . 2
   2.4 Asphalt Roofing Products and Systems . . . . . 4
      2.4.1 Asphalt Shingles and Roll Roofing . . . . . 4
      2.4.2 BUR Systems . . . . . 4
      2.4.3 Modified Bitumen Roofing Systems . . . . . 5

3. MANUFACTURE OF ASPHALT ROOFING PRODUCTS . . . . . 6
   3.1 Primary Manufacturing Processes . . . . . 6
      3.1.1 Air-Blowing . . . . . 6
      3.1.2 Supporting Operations . . . . . 6
   3.2 Manufacturing Line . . . . . 9
      3.2.1 Saturant Asphalt Felt . . . . . 9
      3.2.2 Asphalt Shingles and Roll Goods . . . . . 9
      3.2.3 Modified Bitumen Products . . . . . 13

4. OCCUPATIONAL EXPOSURE TO ASPHALT FUMES . . . . . 16
   4.1 Occupational Exposure Limits . . . . . 16
   4.2 Potential for Exposure . . . . . 16
   4.3 Operations and Jobs with Potential for Asphalt Fume Exposure . . . . . 22

5. GUIDELINES FOR PROTECTING WORKERS . . . . . 23
   5.1 Delivery, Handling, and Storage . . . . . 23
      5.1.1 Engineering Controls . . . . . 23
      5.1.2 Work Practices . . . . . 24

5.2 Saturators . . . . . 24
5.2.1 Engineering Controls . . . . . 24
5.2.2 Work Practices . . . . . 24
5.2.3 Equipment Substitution . . . . . 26
5.3 Modified Bitumen Impregnation Vats . . . . . 26
5.4 Coaters . . . . . 26
5.4.1 Full Enclosure . . . . . 26
5.4.2 Canopy Hood . . . . . 27
5.5 Surfacing and Subsequent Processes . . . . . 28
5.6 Work Practices and PPE . . . . . 28

6. RESEARCH NEEDS . . . . . 30

REFERENCES . . . . . 31

APPENDIX—Respirators . . . . . 35

# ABBREVIATIONS

| | |
|---|---|
| ACGIH | American Conference of Governmental Industrial Hygienists |
| AI | Asphalt Institute |
| APP | atactic polypropylene |
| ARMA | Asphalt Roofing Manufacturers' Association |
| B[a]P | benzo[a]pyrene |
| BUR | built-up roofing |
| °C | degrees Celsius |
| cfm | cubic feet per minute |
| CFR | *Code of Federal Regulations* |
| cm | centimeter(s) |
| EPA | U.S. Environmental Protection Agency |
| °F | degrees Fahrenheit |
| Fed. Reg. | Federal Register |
| ft | foot (feet) |
| GM | geometric mean |
| GSD | geometric standard deviation |
| HEPA | high-efficiency particulate air |
| HHE | Health Hazard Evaluation |
| HPLC | high performance liquid chromatography |
| hr | hour(s) |
| lb | pound(s) |
| LEV | local exhaust ventilation |
| m | meter(s) |
| mg | milligram(s) |
| min | minute(s) |

| | |
|---|---|
| NAICS | North American Industry Classification System |
| ng | nanogram(s) |
| NIOSH | National Institute for Occupational Safety and Health |
| NRCA | National Roofing Contractors Association |
| NSPS | new source performance standards |
| OSHA | Occupational Safety and Health Administration |
| OV | organic vapor |
| PAHs | polycyclic aromatic hydrocarbons |
| PAPR | powered, air-purifying respirator |
| PBZ | personal breathing zone |
| PEL | permissible exposure limit |
| PPE | personal protective equipment |
| REL | recommended exposure limit |
| SBS | styrene-butadiene-styrene |
| SD | standard deviation |
| TLV | threshold limit value |
| TWA | time-weighted average |
| VOCs | volatile organic compounds |
| % | percent |

# GLOSSARY

***Air-blowing:*** The manufacturing process used to make oxidized roofing asphalts in which air is blown through an asphalt flux. An exothermic oxidation reaction occurs, yielding an asphalt that is harder, more viscous, less volatile, and less temperature-susceptible than the asphalt flux used as the feedstock to the process.

***Asphalt: (CAS number 8052–42–4)*** The product of the nondestructive distillation of crude oil in petroleum refining; it is a dark brown to black, cement-like semisolid or solid. Depending on the crude oil used as a feed-stock, the distillation residuum may be further processed, typically by air-blowing (sometimes with a catalyst) or solvent precipitation to meet performance specifications for individual applications [AI 1990b]. Asphalt is a mixture of paraffinic and aromatic hydrocarbons and heterocyclic compounds containing sulfur, nitrogen, and oxygen [Sax and Lewis 1987].

***Asphalt, cutback:*** An asphalt liquefied by the addition of diluents (typically petroleum solvents) [AI 1990b; Roberts et al. 1996; Speight 1992].

***Asphalt flux:*** The residuum of atmospheric and vacuum distillation processes used by petroleum refineries and independent asphalt manufacturers; used in the manufacture of some asphalt roofing materials (e.g., saturant asphalts, some modified bitumen products); also used as a feedstock in the air-blowing process used to make oxidized roofing asphalt.

***Asphalt fumes:*** The cloud of small particles created by condensation from the gaseous state after volatilization of asphalt [NIOSH 1977].

***Asphalt, oxidized (blown or air-refined) (CAS number 64742–93–4):*** Asphalt treated by blowing air through it at elevated temperatures to produce physical properties required for the industrial use of the final product. Oxidized asphalts are used in roofing operations, pipe coating, undersealing for Portland cement concrete pavements, hydraulic applications, membrane envelopes, some paving-grade mixes [AI 1990b], and the manufacture of paints [Speight 1992].

***Blowing still:*** A closed-process vessel fitted at its base with a sparger and used in the air-blowing process to make many types of roofing asphalt.

***Built-up roofing (BUR):*** A system of asphalt-impregnated felt plies sealed and surfaced with hot mopping-grade asphalt; primarily used in low-slope commercial roofing. The felt plies can be organic (e.g., cellulose), fiberglass screen or mat, or polyester fabric.

***Coating asphalt:*** An air-blown or oxidized asphalt used to manufacture roofing materials used in a variety of roofing systems such as asphalt shingles, polymer-modified bitumen roofing, reinforcing and underlayment felts, and roll roofing products.

***Modified bitumen:*** A roofing system based on membranes manufactured by impregnating or coating one or more fabric plies with a straight-run or oxidized asphalt modified using a polymer, usually atactic polypropylene (APP) or styrene-butadiene-styrene (SBS). Modified bitumen systems may be torch-applied or installed by adhesion in hot asphalt or a cold-applied, solvent-based asphalt adhesive (cutback asphalt). Modified bitumen systems are used on low-slope (primarily commercial or industrial) roofs.

***Mopping-grade asphalt:*** An oxidized asphalt used principally in the construction of BUR and some modified bitumen systems; mopping-grade asphalts are produced in four grades (Types I through IV) according to the steepness of the roof.

***Saturant asphalt:*** A nonoxidized or oxidized asphalt, typically an AC–10 or AC–20 grade material, used to manufacture saturated organic felt plies used in the construction of BUR systems, organic felt shingles, and other roofing materials such as roll roofing.

***Straight-run asphalt:*** The residuum of atmospheric and vacuum distillation processes used in petroleum refineries and by independent asphalt manufacturers. This asphalt is used in the manufacture of some asphalt roofing materials (e.g., saturant asphalts, some modified bitumen products); it is also used as a feedstock in the air-blowing process used to make oxidized roofing asphalt.

## ACKNOWLEDGMENTS

This document was prepared by the staff of the National Institute for Occupational Safety and Health (NIOSH) in collaboration with representatives of the Asphalt Institute (AI), the Asphalt Roofing Manufacturers' Association (ARMA), the National Roofing Contractors Association (NRCA), and the United Union of Roofers, Waterproofers, and Allied Workers. Paul A. Schulte, Director, Education and Information Division (EID), had overall responsibility for the document. Joann Wess (NIOSH) was the project director.

The following contributors are gratefully acknowledged: Heinz Ahlers, J.D. (NIOSH); Tom Calzavara (ARMA); William Candy (ARMA); Bill Fayerweather, Ph.D. (ARMA); Jerome Flesch (NIOSH); Bill Good (NRCA); Jude LaPerouse (NRCA); David Marlow (NIOSH); Bernie McCarthy (AI); Leroy Mickelsen (NIOSH); Dennis Mueller (ARMA); Larry Olsen, Ph.D. (NIOSH); Klaus Rosinski, Ph.D. (ARMA); Arthur Sampson (ARMA); Tom Shanahan (NRCA); Richard Snyder (ARMA); Russ Snyder (ARMA); Marie Haring Sweeney, Ph.D. (NIOSH); Alex Teass, Ph.D. (NIOSH); and Ralph Zumwalde (NIOSH).

Vanessa Becks, Richard Carlson, Judy Curless, Susan Feldmann, Anne Hamilton, Susan Kaelin, and Jane Weber (NIOSH) provided editorial support and contributed to the design, graphics, and layout of this document.

# 1 INTRODUCTION

The primary purpose of this document is to increase awareness among plant managers, safety and health professionals, and engineers of the potential for occupational exposure to asphalt and asphalt fumes during the manufacture of asphalt roofing products. The document represents a collaborative effort of industry, labor, and government. During public meetings held in Cincinnati, Ohio (July 22–23, 1996), several groups agreed to develop a series of documents that (1) describe the extent of asphalt exposure during the production of asphalt roofing products and during asphalt roofing operations, and (2) provide information about measures to reduce exposures. These groups included the National Roofing Contractors Association (NRCA); the Asphalt Roofing Manufacturers' Association (ARMA); the Asphalt Institute (AI); the United Union of Roofers, Waterproofers, and Allied Workers; and the National Institute for Occupational Safety and Health (NIOSH). This document identifies work practices and other control measures that, when available, may be effective in reducing worker exposures to asphalt fumes during the manufacture of asphalt roofing products.

In 2000, NIOSH conducted a review of the health effects data on asphalt that had become available since the publication of the 1977 criteria document on asphalt [NIOSH 2000]. This review addresses acute and chronic effects and is available at the NIOSH Web site (www.cdc.gov/niosh) for readers interested in additional information.

NIOSH, labor, and industry are working together to better characterize and quantitate the health risks from asphalt exposure. Representatives of industry, labor, government, and academia met in Cincinnati, Ohio, on September 11 and 12, 2000, and identified research to assess completely the health risks associated with exposure to asphalt. Through these and other efforts of this partnership, effective workplace measures can be implemented to reduce worker exposure to asphalt fumes.

# 2 BACKGROUND

## 2.1 COMPOSITION AND USES OF ASPHALT

Asphalt (CAS* No. 8052–42–4) is a dark brown to black, cementitious, thermoplastic material found in a natural state or (more commonly) manufactured in petroleum refineries by atmospheric or vacuum distillation; it may also be left as residue after evaporating or otherwise processing crude oil or petroleum. Asphalt is solid or highly viscous at ambient temperatures. This material is an extremely complex mixture containing a large number of high-molecular-weight organic compounds [King et al. 1984]. Asphalt is now the dominant material in roofing in the United States. However, coal tar is still used in some roofing work, usually to conform to government building specifications that require the use of coal tar [Freese and Nichols, Inc. 1994].

Most of the asphalt used in the United States is used in paving (87%) and roofing (11%) operations. Only about 1% is used for waterproofing, dampproofing, insulation, paints, and other activities [AI 1990a]. Asphalt roofing products and systems include shingles and roll roofing, ply felt, built-up roofing (BUR) systems, saturated felt used as underlay for shingles, and modified bitumen systems. These products and systems are described in Section 2.4.

*Chemical Abstracts Service.

## 2.2 MANUFACTURE OF ASPHALT ROOFING PRODUCTS

Ninety-seven asphalt roofing manufacturing plants currently operate in the United States. (The North American Industry Classification System [NAICS] code is 324122 for asphalt shingle and coating materials manufacturing.) These plants are owned by 27 companies and are located in 28 States, generally within 500 to 800 miles of their primary markets. The plants vary greatly in size, number of workers, and products manufactured. A typical asphalt roofing plant manufactures several products, including shingles, roll roofing (smooth or mineral surfaced), ply felt for use in BUR, and saturated felt used as underlay for shingles. Modified bitumen products are manufactured on machines designed for polymer-modified materials.

Approximately 3,000 to 4,000 workers are exposed to asphalt fumes in approximately 100 roofing manufacturing plants [ARMA 2001].

## 2.3 MANUFACTURE OF ROOFING ASPHALTS

The three basic grades of roofing asphalt are (1) saturant-grade asphalt, a nonoxidized or oxidized asphalt used to manufacture saturated felt plies used in the construction of BUR systems, organic felt shingles, and other roofing materials such as roll roofing;
(2) coating-grade asphalt, an oxidized asphalt used to manufacture roofing materials for a

variety of roofing systems such as asphalt shingles, polymer-modified bitumen roofing, reinforcing and underlayment felts, and roll roofing products; and (3) mopping-grade asphalt, an oxidized asphalt that is melted and used in the construction of BUR and modified bitumen systems. Each grade of asphalt is also used to manufacture a variety of asphalt coating and sealant products.

The principal differences between saturant- and coating-grade asphalts are viscosity and softening point. Saturant asphalts typically have a softening point of about 120 to 140 °F (50 to 60 °C), making them less viscous than coating asphalts, which have a softening point of approximately 200 to 225 °F (95 to 105 °C). Despite their lower viscosity, saturant asphalts are processed at significantly higher temperatures (about 425 to 475 °F [218 to 245 °C]) than coating asphalts (about 380 to 460 °F [190 to 238 °C]) because of the need to ensure adequate impregnation of the organic felts that use saturant asphalts [ASTM 1995].

The four types of mopping-grade asphalt are described in Table 2–1. The viscosity of mopping-grade asphalts depends on which of the four types is being manufactured. Type I is the softest (least viscous) grade and is used on very-low-slope roofs. Type IV is the hardest (most viscous) grade and is used on the highest slope roofs suitable for BUR systems.

Petroleum refineries and independent asphalt manufacturers produce oxidized roofing asphalt by air-blowing the residuum of refinery atmospheric or vacuum distillation processes. This starting material, termed "asphalt flux," also may be a blend of residua from different sources. In the air-blowing or oxidation process, heated asphalt flux is placed into a tank known as a blowing still, and air is blown through it. The reactions that take place are exothermic, so the temperature is controlled within the range of 400 to 550 °F (204 to 288 °C). The temperature and the amount of air are varied by the manufacturer depending on the nature of the asphalt flux and the intended characteristics of the oxidized roofing asphalt being produced. This process raises the softening point and viscosity and lowers the penetration and ductility of the asphalt [King et al. 1984; IARC 1985; Corbett 1979].

At the temperatures of the air-blowing process, the oxidations and subsequent reactions ultimately yield compounds of increased polarity and higher apparent molecular weight [Boduszynski 1981; Corbett 1975; Goppel and Knotnerus 1955]. Compared with the asphalt flux, the air-blown asphalts contain an increased proportion of asphaltenes, decreased proportions of naphthene-aromatics and polar aromatics, and about the same proportion of saturates[†] [Corbett 1975; Boduszynski 1981; Moschopedis and Speight 1973]. The process effluent contains water, carbon dioxide, and other reaction products and small amounts of relatively volatile components of the asphalt [Corbett 1975; Goppel and Knotnerus 1955]. The oxygen added to asphalt in the air-blowing process appears to reside in hydroxyl, peroxide, and carbonyl functional groups, the latter including ketones, acids, acid anhydrides, and esters [Campbell and Wright 1966; Petersen et al. 1975; Goppel and Knotnerus 1955].

---

[†]For determination of gross composition, asphalt is frequently fractionated by treatment with heptane or a similar hydrocarbon solvent to precipitate the asphaltenes; fractionation is followed by chromatography of the maltenes (soluble portion) into three fractions, which are (in order of increasing polarity) the saturates, naphthene-aromatics, and polar aromatics [Corbett 1975; Boduszynski 1981].

**Table 2–1. Types of mopping-grade asphalt**

| Type | Susceptibility to flow at roof temperatures | Highest slope suitable for use (% slope) | Softening point (°F) |
|---|---|---|---|
| I, dead level | Relatively susceptible | 2 | 135–151 |
| II, flat | Moderately susceptible | 4 | 158–176 |
| III, steep | Relatively nonsusceptible | 25 | 185–205 |
| IV, special steep | Relatively nonsusceptible | 50 | 210–225 |

## 2.4 ASPHALT ROOFING PRODUCTS AND SYSTEMS

Today, three commercially popular roofing products or systems are made from roofing asphalt, each with different characteristics and applications:

- **Asphalt shingles and roll roofing** are used in residential and steep-slope commercial roofing.
- **BUR systems** are asphalt-impregnated felt pieces sealed and surfaced with hot mopping asphalt; the systems are used in low-slope commercial roofing.
- **Modified bitumen systems** are also a low-slope commercial product using polymer-modified roofing asphalts to impregnate and coat one or more fabric plies.

### 2.4.1 Asphalt Shingles and Roll Roofing

Asphalt shingles introduced in the early 1900s account today for about 75% of new construction and reroofing in steep-slope residential and some commercial roofing applications [NRCA 1995]. Roll roofing was the mainstay of the steep-slope market until it was largely displaced by shingle products. Today, roll roofing is used mainly in BUR systems on low-slope roofs. With low-slope roofing, smooth-surface roll roofing can be used in building the BUR membrane, and mineral-surfaced roll roofing is used as a cap or "top sheet" [NRCA 1996; AI 1990a].

Asphalt shingles and roll roofing both consist of a reinforcing felt covered with coating asphalt; organic felts are impregnated with a saturant asphalt. In most cases, asphalt shingles and roll roofing contain a surfacing material, usually coarse or fine mineral. Asphalt shingles and roll roofing are installed using mechanical fasteners or cold-applied adhesives; they do not require hot mopping asphalt. In addition, they are typically installed over an underlayment felt that has been impregnated with coating asphalt during manufacture, and both are affixed to the roof substrate by mechanical means or cold adhesives [NRCA 1996].

### 2.4.2 BUR Systems

BUR systems were introduced in the late 1800s and remain the most popular roofing system for commercial and industrial buildings, accounting for about 30% of the new and retrofit market for low-slope roofs [NRCA 1995]. The BUR membrane is

composed of layers (or "moppings") of mopping asphalt between felt plies of saturant asphalt or coating asphalt reinforcing fabric, such as organic felts (e.g., cellulose), fiberglass scrim or mat, or polyester fabric. BUR membranes are installed in multiple-ply configurations that typically involve three to six interply moppings of mopping asphalt. In addition, roll roofing made from organic or inorganic materials, or a flood coat[‡] of mopping asphalt (usually Type I) is applied as a weatherproofing top layer.

All three grades of roofing asphalt (coating, saturant, and mopping) may be used in the manufacture or construction of BUR systems: saturant asphalts are used to manufacture organic felts and roll roofing; coating asphalts are used for virtually all felt ply and roll goods; and heated mopping asphalts are used for the interply moppings and, in some cases, the flood coats applied in constructing the BUR membrane [NRCA 1996].

### 2.4.3 Modified Bitumen Roofing Systems

Polymer-modified bitumen roofing systems were introduced in the 1970s and today account for about 23% of the new and retrofit market for low-slope (i.e., primarily commercial and industrial) roofs [NRCA 1995]. Modified bitumen products are of two types: (1) those made primarily with atactic polypropylene (APP), and (2) those made primarily with styrene-butadiene-styrene (SBS) as the polymer modifier.

APP membranes are primarily torch-applied—that is, they are adhered to an underlying base sheet or to the manufacturer's approved substrate by heating the back side of the APP membrane and the substrate with high-intensity, propane-fired torches or specially designed hot-air welders. The heat is applied only as needed to soften the asphalt and make the modified bitumen membrane adhere to the substrate; these products can be cold-applied with adhesives. SBS membranes may be applied by adhesion in hot asphalt or in a cold-applied, solvent-based asphalt adhesive; or they may be torch-applied [NRCA 1996].

[‡]Flood coat is the surfacing layer of asphalt into which surfacing aggregate is embedded on an aggregate-surfaced, built-up roof. A flood coat is generally thicker and heavier than a glaze coat and is applied at approximately 45 to 60 lb/100 $ft^2$ (a square) (2 to 3 $kg/m^2$).

# 3 MANUFACTURE OF ASPHALT ROOFING PRODUCTS

## 3.1 PRIMARY MANUFACTURING PROCESSES

The manufacture of asphalt roofing products consists of six major operations: (1) felt saturation, (2) coating, (3) mineral surfacing (top and bottom), (4) cooling and drying, (5) product finishing (seal-down strip application, cutting and trimming, and laminating of laminated shingles), and (6) packaging. The six major production support operations are as follows: (1) air-blowing, (2) delivery, in-plant transfer, and storage of hot asphalt, (3) back surfacing and granule storage, (4) filler storage, (5) filler heating, and (6) filler and coating asphalt mixing. Figure 3–1 shows a typical manufacturing line for an asphalt roofing product. The following sections give detailed descriptions of the major processes associated with the manufacture of asphalt roofing products.

### 3.1.1 Air-Blowing

Preparing the roofing asphalt is an integral part of manufacturing asphalt roofing products. This preparation, called blowing or air-blowing, involves bubbling air through liquid asphalt flux in blowing stills. Blowing stills are closed-process vessels located out-of-doors. Emissions from the vessels are vented to capture devices located away from work areas and to incinerators (see Figure 3–2). Blowing operations may be located at oil refineries, asphalt processing plants, or asphalt roofing products plants.

A blowing still is a tank fitted near its base with a sparger (air lines in a spider arrangement). The purpose of the sparger is to increase contact between the air and the asphalt. Air is forced through holes in the sparger into a tank of hot asphalt flux. The air rises through the asphalt, resulting in an exothermic oxidation reaction.

Sometimes a catalyst such as ferric chloride is added to assist in this transformation. Because of the exothermic nature of the reaction, the temperature may reach 500 °F (260 °C); the use of external water cooling systems or internal water sprays is required to maintain the desired temperature. Such temperature control also prevents thermal cracking of the chemical constituents of the asphalt.

Air-blowing the asphalt raises its softening temperature and reduces its penetration, resulting in a “harder,” more viscous asphalt suitable for roofing applications.

### 3.1.2 Supporting Operations

Asphalt is normally delivered in bulk to the asphalt roofing plant by pipeline, tanker truck, or railcar. Bulk asphalts are delivered in liquid form at temperatures of 200 to 450 °F (93 to 232 °C), depending on the type of asphalt and local practice.

Several tanker unloading techniques are used. The most common method is to couple a flexible pipe to the tanker and pump the

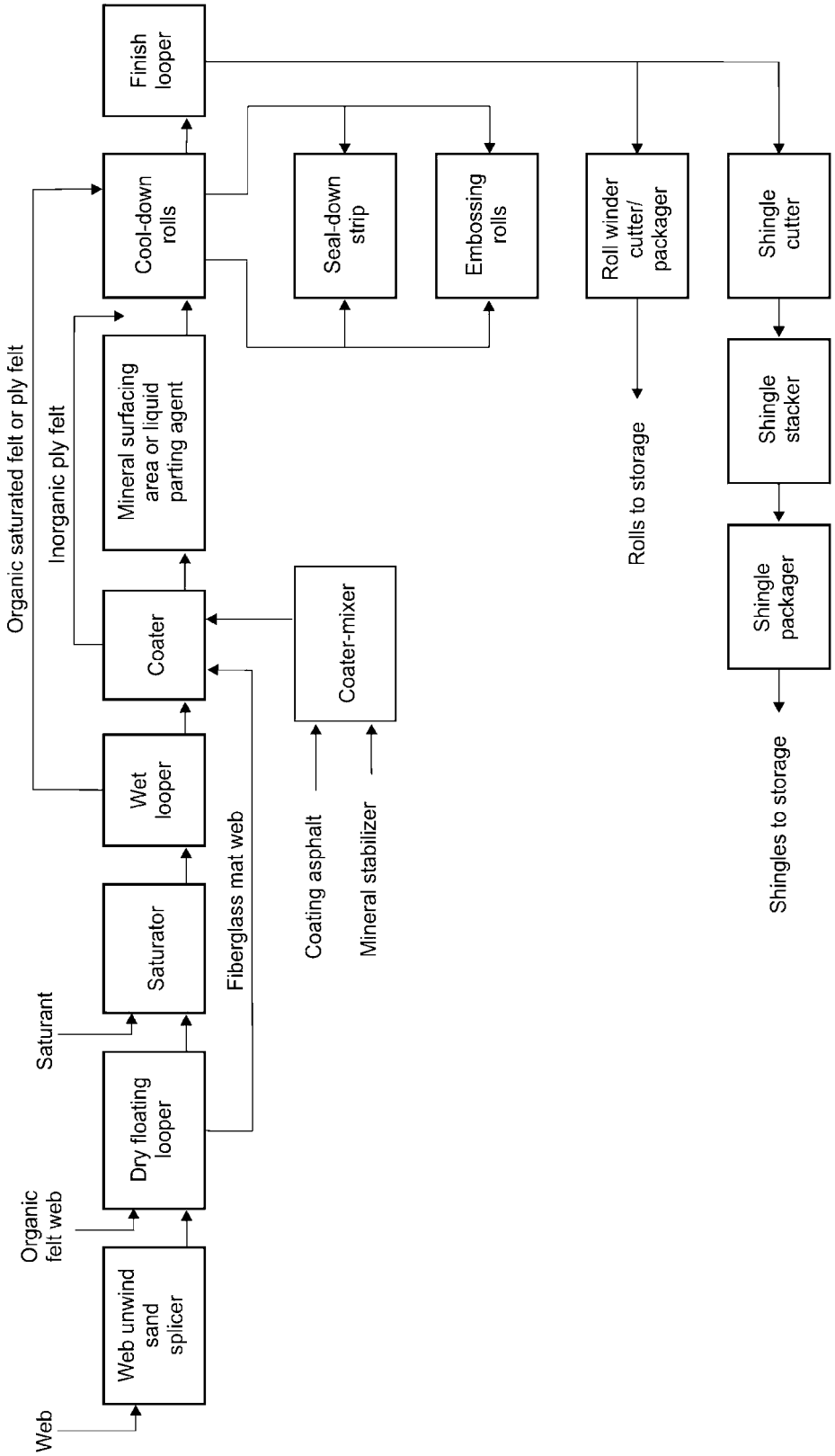


**Figure 3–1.** Diagram of typical manufacturing line for an asphalt roofing product. (Source: EPA [1988].)

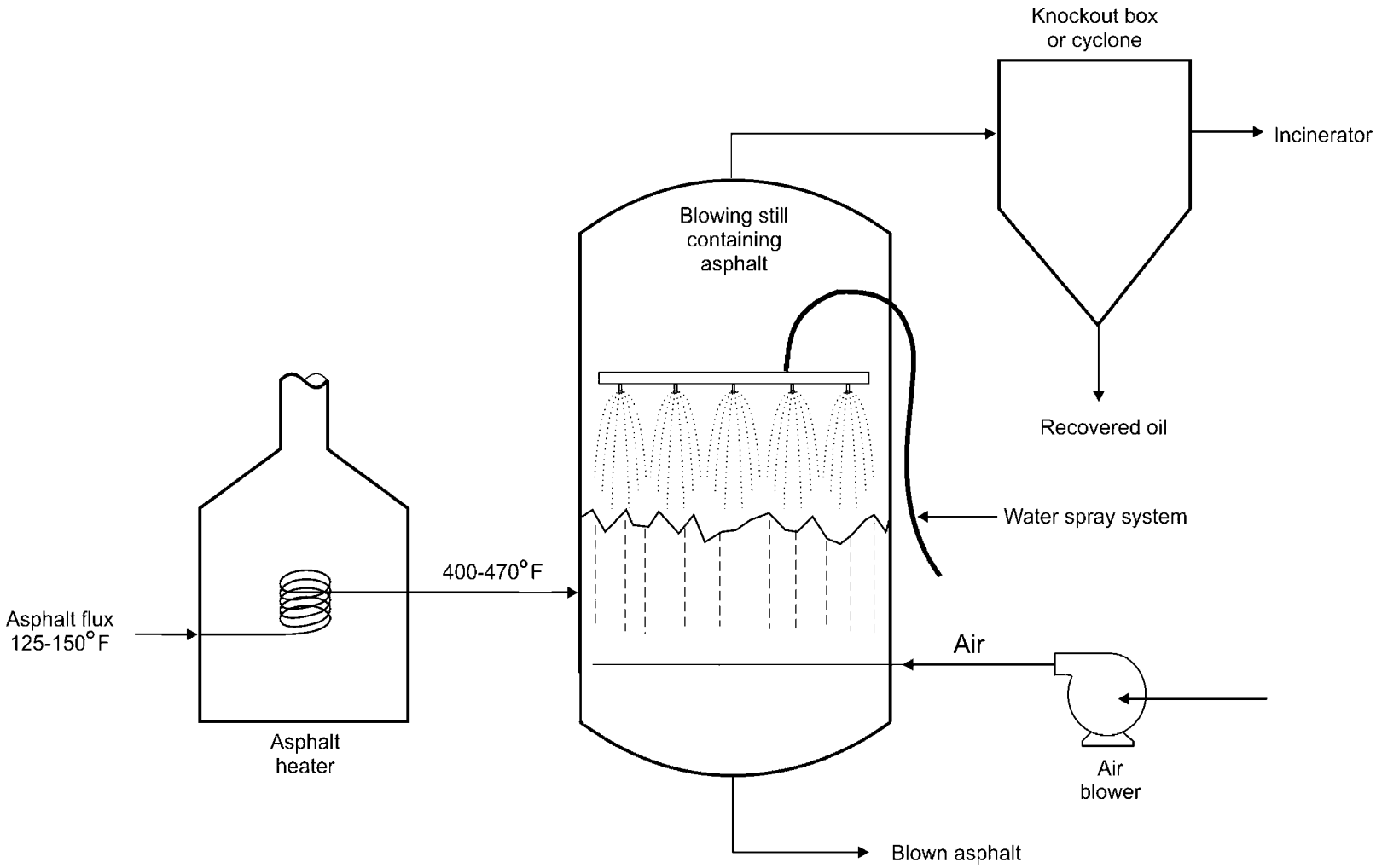


**Figure 3–2.** Preparation of roofing asphalt by air blowing. (Source: EPA [1988].)

asphalt directly into the appropriate storage tanks. Another unloading procedure is to pump the hot asphalt into a large, open funnel connected to a surge tank. From there, asphalt is pumped into storage tanks.

Asphalt flux (see Section 2.3) is usually stored at 124 to 174 °F (51 to 79 °C), although storage temperatures of up to 450 °F (232 °C) have been noted. Lower temperatures of the asphalts are usually maintained with steam coils in the tanks. Saturant and coating asphalts are normally stored at 400 to 500 °F (204 to 260 °C). Temperatures are maintained by heating the tanks directly or by cycling the asphalt through external heat exchangers, usually of the closed-tube type. Asphalt is transferred within the plant by closed pipeline.

## 3.2 MANUFACTURING LINE

The following sections provide detailed descriptions of the manufacturing processes for roofing asphalt products and product groups.

### 3.2.1 Saturant Asphalt Felt

Saturant asphalt felt is the most basic asphalt roofing product. Figure 3–3 depicts a typical manufacturing line for asphalt-saturated felt. It consists of a dry felt feed roll, a dry looper section, a saturator spray section, a saturator dipping section, heated drying-in drums, a wet looper, a finish floating looper, and a roll winder.

Organic felt may weigh from approximately 20 to 55 lb/480 $ft^2$ (a common unit in the paper industry), depending on the intended product. The felt is unrolled from the unwind stand onto the dry looper, which maintains a constant tension on the material. The dry floating looper provides a reservoir of web material to match the intermittent operation of the roller to the continuous operation of the line.

From the dry looper, the felt may pass into the spray section of the saturator (not used in all plants), where saturant asphalt at 400 to 480 °F (205 to 250 °C) is sprayed onto one side of the felt through several nozzles. In the saturator dip section, the saturated felt is drawn over a series of rollers, with the bottom rollers submerged in hot saturant asphalt at 400 to 480 °F (205 to 250 °C).

During the next step, the heated drying-in drums press saturant asphalt into the felt. Occasionally, additional saturant asphalt is added at this point. The wet looper increases absorption by providing sufficient time for the saturant asphalt to penetrate the felt.

The saturated felt then passes through water-cooled rolls onto the finish floating looper. These steps allow the felt to cool and serve as an accumulator to match the continuous operation of the line to the intermittent operation of the roll winder. Finally, the felt is rolled and cut to size on the roll winder. Common weights of saturant felt are approximately 15 to 50 lb/108 $ft^2$ of saturant felt (which covers exactly 100 $ft^2$ of roof).

### 3.2.2 Asphalt Shingles and Roll Goods

Figure 3–4 illustrates the typical manufacturing process for producing organic asphalt roofing shingles, mineral-surfaced rolls, and smooth rolls. For organic products, the initial processing steps are similar to the saturant asphalt felt line just described and include the saturator and looper. Organic felt products pass to the saturator and then, in some plants, on to a coater.

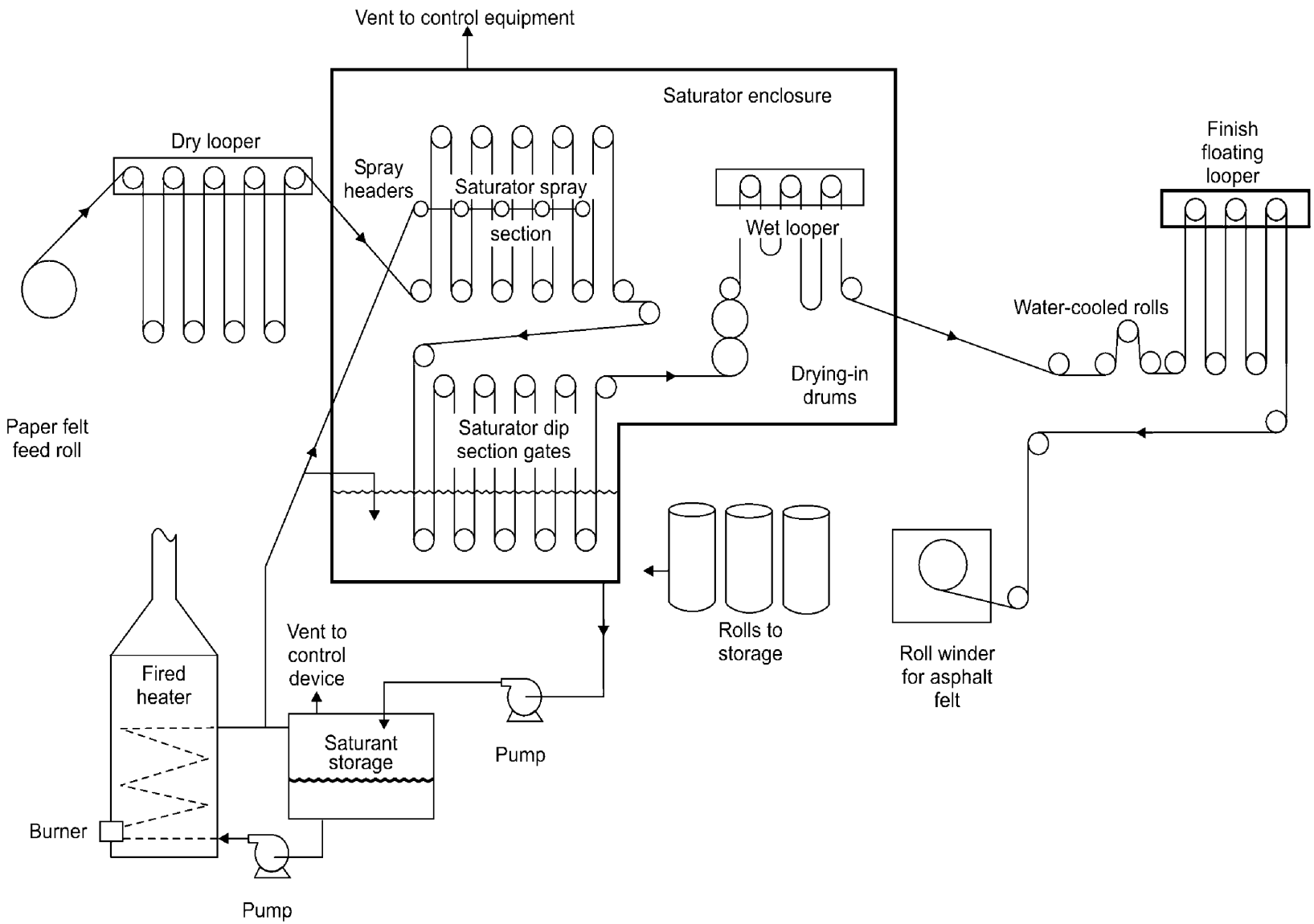


**Figure 3–3.** Typical flow diagram for the production of saturant asphalt felt. (Source: EPA [1988].)

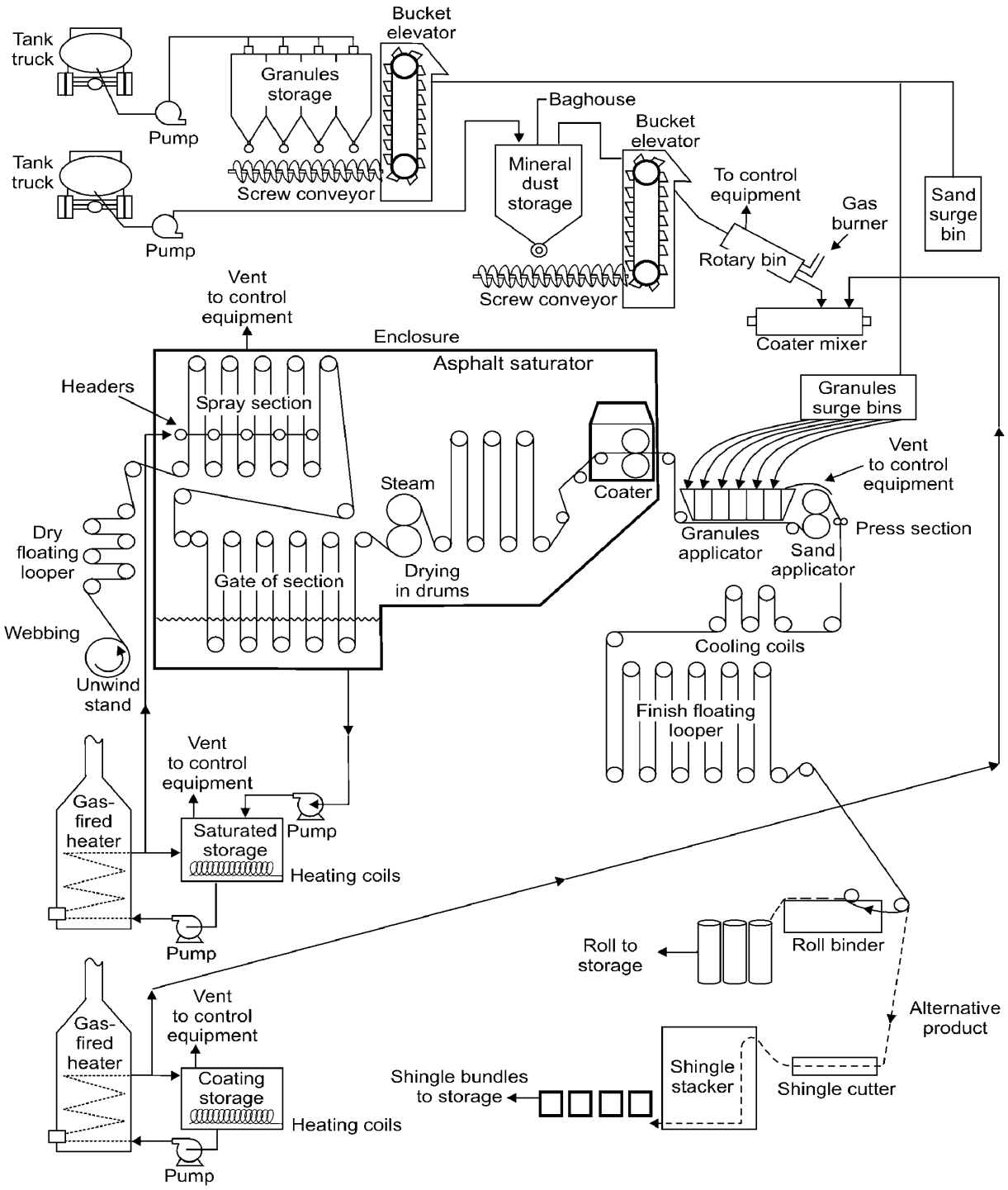


**Figure 3–4.** Typical flow diagram for the production of organic asphalt roofing shingles and rolls. (Source: EPA [1988].)

The coater employs a roller-type system to apply a stabilized coating asphalt to the top and bottom surfaces of the webbing sheet. Stabilized coating asphalt is made up of harder, more viscous asphalt that has a higher softening point than saturant asphalt. The mineral stabilizer* may consist of finely divided lime, silica, slate dust, dolomite, or other mineral materials. The softening point of saturant asphalt varies from 104 to 165 °F (40 to 74 °C), whereas the softening point of coating asphalt varies from 210 to 240 °F (99 to 116 °C).

The "filled" or "stabilized" coating asphalt applied during the coater operation is made in the coater-mixer, which is usually positioned above the manufacturing line at the coater. Coating asphalt, typically at 400 to 520 °F (204 to 271 °C), is piped into the mixer, and the mineral stabilizer is delivered by screw conveyor. To eliminate moisture problems and to help maintain the temperature above 360 ˚F (182 ˚C) in the coater-mixer, the mineral stabilizer is dried and preheated before being fed into the coater-mixer.

The weight of the finished product is controlled by the amount of coating asphalt used. The coater rollers can be moved closer together to reduce the amount of coating asphalt applied to the felt, or they can be separated to increase it. Most modern plants are equipped with automatic scales or profile scanners that monitor the sheets during the manufacturing process and warn the coater operator when the product is running under or over specifications.

Colored granules are applied in a section of the manufacturing line that usually consists of a multi-compartmented granule hopper, two parting agent hoppers, and two large press rollers. The hoppers are fed through flexible hoses from one or more machine bins above the line. These machine bins (sometimes called surge bins) provide temporary storage. The granule hopper drops colored granules from its various compartments onto the top surface of the moving sheet of coated webbing in the sequence necessary to produce the desired color pattern on the roofing. Parting agents such as talc and sand are applied from parting agent hoppers to the back surface of the coated sheet. Smooth-surfaced products do not require the application of colored granules. Talc or sand is usually applied to both sides when smooth roll roofing is made.

The next step is product cooling and seal-down strip application. As in the case of the saturated felt line, the sheet is cooled rapidly by passing it around water-cooled rollers in an abbreviated looper arrangement. Usually, water is also sprayed on the surfaces of the sheet to speed this cooling process.

Subsequently, the asphalt seal-down strip is applied to self-sealing coated roofings by a roller partially submerged in a pan of hot sealant asphalt that is usually covered. Extrusion is another method of seal-down application. Some products are also texturized at this point by passing the sheet over an embossing roll that forms a pattern in the surface of the sheet. The final steps in the production of asphalt roofing shingles and roll roofing are the finish

*The mineral stabilizer used in asphalt roofing applications is an inorganic material, typically a crushed rock. Because this material is inorganic, it is less susceptible to temperature change and fire. These properties are important for shingle manufacturing. Asphalt with stabilizer is uniform and consistent within the climatic temperature range. Essentially, the stabilizer reduces viscosity in colder weather (making the shingle less brittle) and increases viscosity in warmer weather (increasing the softening point). In addition, the mineral stabilizer decreases the flammability of asphalt, thus allowing a higher fire rating of the shingle.

or cooling looper (which is essentially the same process used for saturated felts), cutting, and packaging. The sheet destined for roll roofing is wound on a mandrel, cut to the proper length, and packaged. When shingles are made, the material from the finish looper is fed into the shingle cut machine. After the shingles have been cut, they are usually moved by roller conveyor to automatic packaging equipment—although manual packaging is still used for some shingle products. The packaged shingles are then stacked on pallets and transferred by forklift to storage areas or waiting trucks.

For fiberglass products (which today make up about 85% of the asphalt roofing shingle market and more than 90% of the ply sheets used in BUR), the initial saturation operation is eliminated. As shown in Figure 3–5, the manufacture of fiberglass roofing products begins (as does the manufacture of organic felts) with the feeding of the mat through a dry looper; it then proceeds to a coater.

### 3.2.3 Modified Bitumen Products

The manufacturing line for modified bitumen products is similar to that used for organic asphalt roofing shingles and roll roofing. A diagram for the production of modified bitumen products appears in Figure 3–6.

The first step in the manufacture of modified bitumen products is mixing the asphalt with either atactic and isotactic polypropylene or styrene-butadiene-styrene and a mineral stabilizer in large heated tanks (356 °F [180 °C]). This mixture is then applied in an impregnation vat to a polyester and/or fiberglass, mat-base webbing. (The impregnation vat consists of a looper-type arrangement in a shallow vat of the asphalt mixture and a set of rollers that meter the thickness of the product.) During the cooling process, either a polypropylene backing or granules are applied to the top side of a sheet (which is still hot) floating on a water-filled tray. The sheet is then either completely submerged in another water-filled tray or sprayed with water to finish the cooling process. After the sheet is dried with a fan, talc or sand is applied to the under-surface side as a parting agent. The sheet then passes through a finish looper (accumulator) and is wound on rolls.

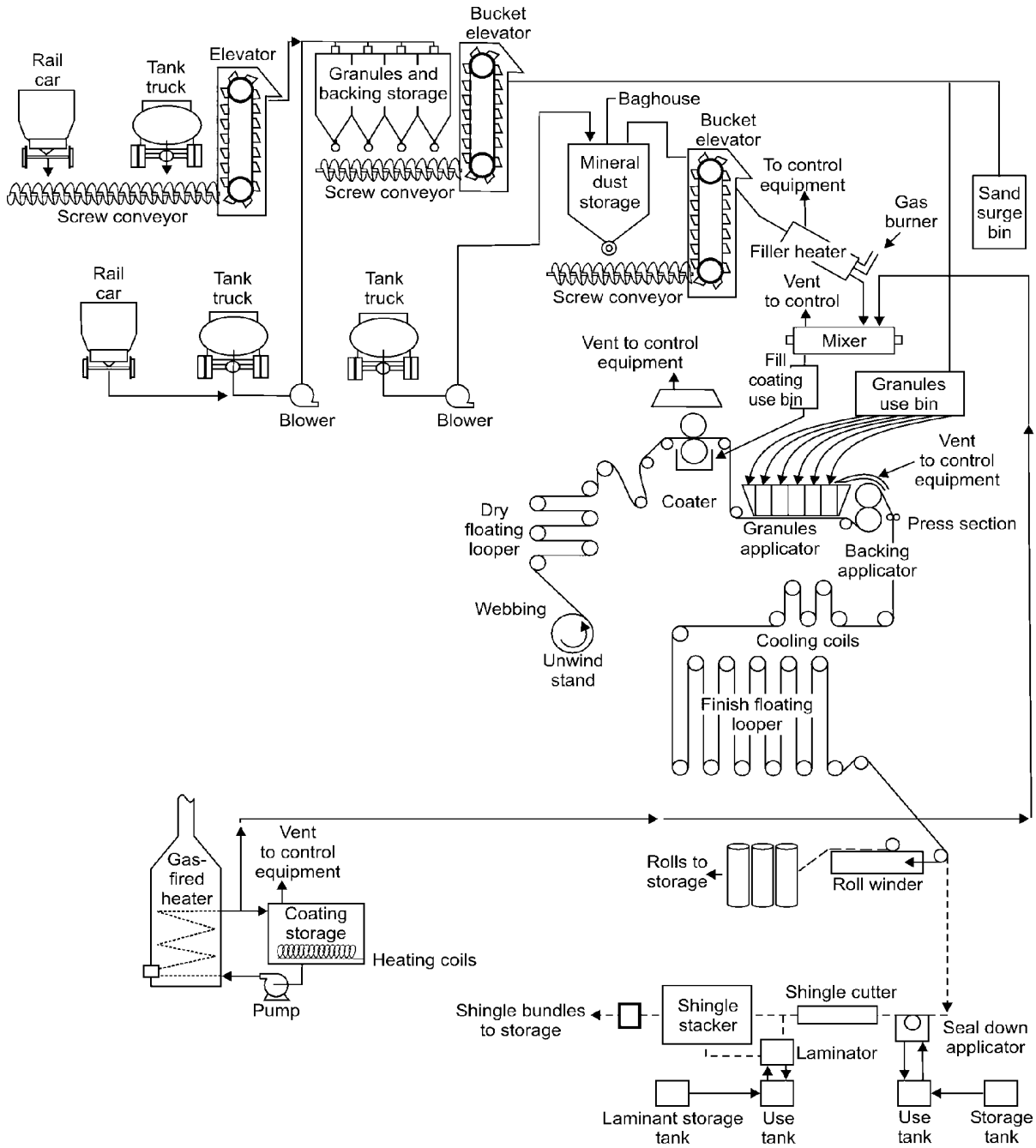


**Figure 3–5.** Typical flow diagram for the production of fiberglass shingles and rolls. (Source: ARMA [1997].)

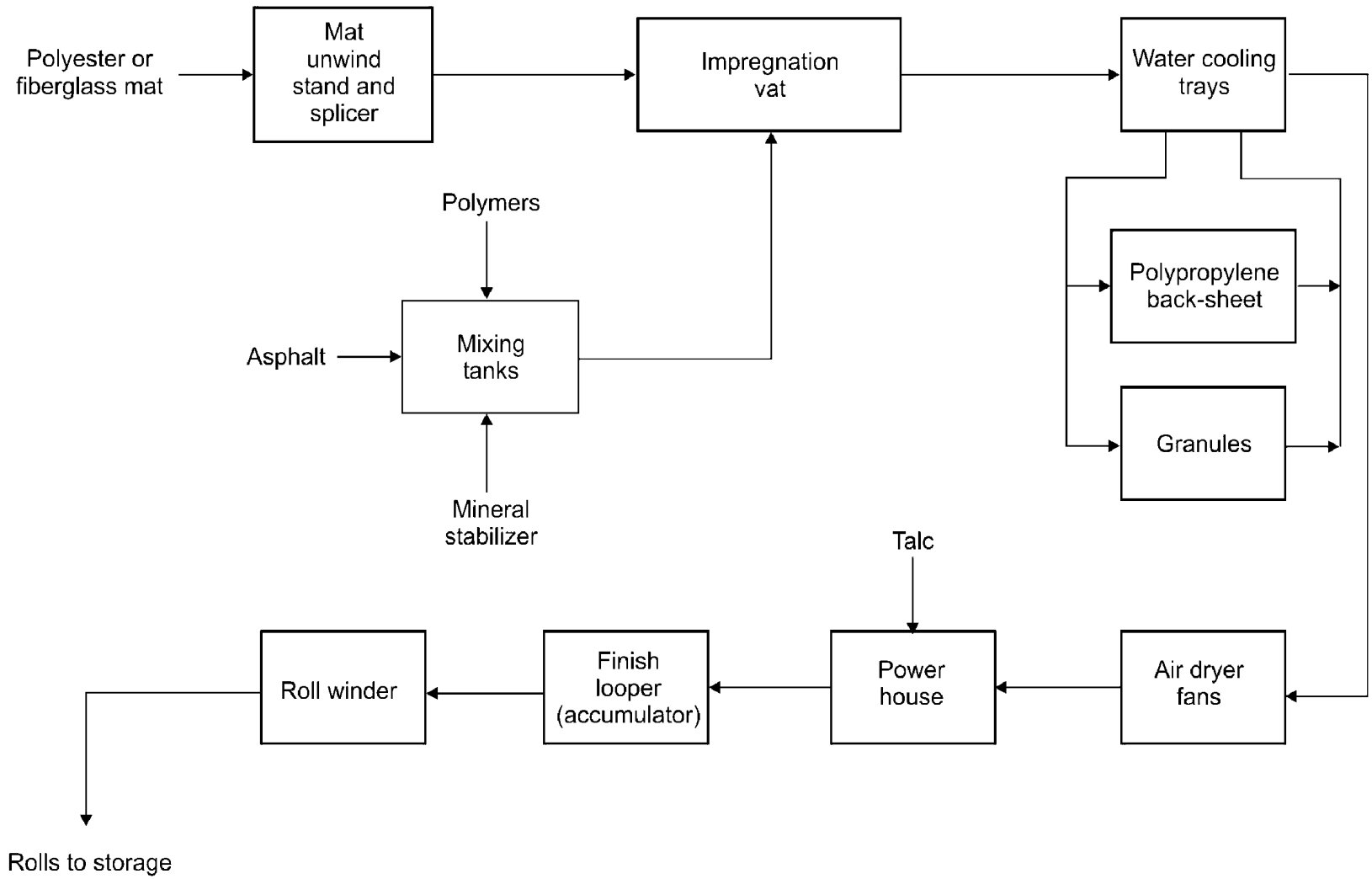


**Figure 3–6.** Diagram for the production of modified bitumen product. (Source: EPA [1988].)

# 4 OCCUPATIONAL EXPOSURE TO ASPHALT FUMES

## 4.1 OCCUPATIONAL EXPOSURE LIMITS

Currently, no Occupational Safety and Health Administration (OSHA) standard exists for asphalt fumes. In a 1988 proposed rule on air contaminants, OSHA proposed a permissible exposure limit (PEL) of 5 mg/m$^3$ as an 8-hr time-weighted average (TWA) for asphalt fume exposures in general industry. This proposal was based on a preliminary finding that asphalt fumes should be considered a potential carcinogen [53 Fed. Reg.* 21193]. In 1989, OSHA announced that it would delay a final decision on the 1988 proposal because of complex and conflicting issues submitted to the record [54 Fed. Reg. 2679]. In 1992, OSHA published another proposed rule for asphalt fumes that included a PEL of 5 mg/m$^3$ (total particulates) for general industry, construction, maritime, and agriculture [57 Fed. Reg. 26182]. Although OSHA invited comment on all of the alternatives, its proposed standard for asphalt fumes would establish a PEL of 5 mg/m$^3$ (total particulates) based on avoidance of adverse respiratory effects. The OSHA docket is closed, and OSHA has not scheduled any further action.

In the 1977 criteria document, NIOSH established a recommended exposure limit (REL) of 5 mg/m$^3$ as a 15-min ceiling limit for asphalt fumes measured as total particulates. The NIOSH REL was intended to protect workers against acute effects of exposure to asphalt fumes, including irritation of the serous membranes of the conjunctivae and the mucous membranes of the respiratory tract. In 1988 testimony to the Department of Labor, NIOSH recommended that asphalt fumes be considered a potential occupational carcinogen [NIOSH 1988]. In 2000, NIOSH conducted a review of the health effects data available since publication of the 1977 criteria document. This review is available at the NIOSH Web site (www.cdc.gov/niosh).

The current American Conference of Governmental Industrial Hygienists (ACGIH) threshold limit value (TLV) for asphalt fumes is 0.5 mg/m$^3$ (benzene-soluble aerosol) as an 8-hr TWA concentration with an A4 designation, indicating that it is not classifiable as a human carcinogen [ACGIH 2001].

## 4.2 POTENTIAL FOR EXPOSURE

Dermal contact with hot asphalt can cause burns, and asphalt fumes or vapors can be absorbed through the skin. Information is limited on the occurrence of exposure to asphalt fumes during the manufacture of asphalt roofing products. Five NIOSH health hazard evaluations (HHEs) conducted during the 1970s listed personal breathing zone (PBZ) concentrations ranging from 0.3 to 32 mg/m$^3$ for total particulates and 0.21 to 6.8 mg/m$^3$ for the cyclohexane solubles [Apol and Okawa 1977, 1978; Okawa and Apol 1977, 1978a,b]

**Federal Register*. See Fed. Reg. in references.

(see Table 4–1). In a cross-sectional exposure assessment study conducted for the AI [AI 1991; Hicks 1995], data indicate that PBZ measurements ranged from 0.068 to 13 mg/m$^3$ for total particulates; PBZ measurements ranged from 0.013 to 3.7 mg/m$^3$ for benzene solubles [AI 1991; Hicks 1995] (see Table 4–1).

An analysis of the 34 full-shift PBZ samples (most sampling ranged from 7 to 9 hr) indicates that the geometric mean (GM) for total particulates was 1.4 mg/m$^3$ and the GM for benzene solubles was 0.27 mg/m$^3$ [Hicks 1995] (see Table 4–2). In another study [Exxon 1997], analysis of 77 PBZ samples indicates that the GM for total particulates was 0.6 mg/m$^3$ and the GM for the benzene-soluble fraction of the samples was 0.08 mg /m$^3$.

In the Hicks [1995] study, PBZ and dermal wipe samples were also collected and analyzed for specific PAHs (see Tables 4–7 and 4–9 in NIOSH [2000]). Several types of polycyclic aromatic hydrocarbons (PAHs) were detected in these samples (see Table 4–7 in NIOSH [2000]). The method used in the Hicks study was high performance liquid chromatography (HPLC) with an ultraviolet/fluorescence detector (NIOSH Method 5506) [NIOSH 1994, 1998]. This method lacks the resolution to reliably identify and quantify discrete PAHs in asphalt fumes (see NIOSH [2000], Section 3.5.3).

The asphalt roofing products manufacturing industry summarized exposure data collected during 1980–1997 at 53 plants of 4 companies (A, B, C, and D). The data were from 1,920 samples for total particulates and 1,184 samples for benzene or cyclohexane solubles as TWAs [Fayerweather 1998]. Exposure data were not provided by job title because job titles were inconsistent among companies and did not always relate to a location or task on the manufacturing line. An attempt to classify the jobs into three exposure groups was unsuccessful because sampling was reported to have been conducted during nonroutine tasks and conditions. Figures 4–1 and 4–2 compare the average exposure data for total particulates and benzene/cyclohexane solubles for 1980–1989 and 1990–1997 from the four companies. (No comparison data were available for company D, since data were collected only for 1995–1997.) These figures indicate that average exposures, expressed either as total particulates or as benzene/cyclohexane solubles, declined after 1990 for companies A, B, and C.

No conclusions can be drawn as to the statistical significance of this observation, however, since statistical analyses were not conducted and raw data are not available for additional analyses.

The asphalt roofing manufacturing industry attributes this apparent reduction in average exposures after 1990 to the following: (1) the elimination of the saturator process by converting from paper roofing felts to glass fiber mats, (2) the improvement of capture efficiency of exhaust hoods, (3) the conversion to closed saturators on several operations, and (4) the reduction of fugitive emissions subject to the U.S. Environmental Protection Agency (EPA) regulations under the new source performance standards (NSPS) and other 1990 Clean Air Act Amendment requirements. By 1990, most plants had eliminated the saturator process and implemented other controls (not specified).

**Table 4–1. Asphalt fume exposures for various occupations during manufacturing of roofing products**

| Reference, source of exposure, and occupation | Breathing-zone samples | | Exposure concentration (mg/m³) | | |
|---|---|---|---|---|---|
| | Type* | Number | Range | Geometric mean | Arithmetic mean |
| Apol and Okawa [1977], production of asphalt shingles and rolled roofing materials: | | | | | |
| Saturator operator | Total particulates | 3 | 2.2–7.3 | 4.9 | 5.6 |
| | Cyclohexane solubles | 2 | 0.81–2.6 | 1.4 | 1.7 |
| Coater operator | Total particulates | 2 | 14–15 | 14 | 14 |
| | Cyclohexane solubles | 2 | 0.87–6.8 | 2.4 | 3.9 |
| Coater trainee | Total particulates | 2 | 11–15 | 13 | 13 |
| | Cyclohexane solubles | 2 | 0.30–2.3 | 0.84 | 1.3 |
| Press operator | Total particulates | 2 | 6.1–32 | 14 | 19 |
| | Cyclohexane solubles | 2 | 1.4–1.5 | 1.4 | 1.42 |
| Seal-down operator | Total particulates | 2 | 0.99–1.4 | 1.2 | 1.21 |
| | Cyclohexane solubles | 2 | 0.43–1.2 | 0.71 | 0.81 |
| Foreman | Total particulates | 2 | 5.3–6.3 | 5.8 | 5.8 |
| | Cyclohexane solubles | 2 | 0.47–0.53 | 0.50 | 0.5 |
| Laminator operator | Total particulates | 7 | 0.96–2.16 | 1.6 | 1.6 |
| | Cyclohexane solubles | 5 | 0.23–0.76 | 0.46 | 0.50 |
| Okawa and Apol [1977], production of asphalt shingles: | | | | | |
| Laminator operator | Total particulates | 8 | 0.38–5.2 | 1.0 | 1.4 |
| | Cyclohexane solubles | 8 | 0.24–3.1 | 0.76 | 1.05 |
| Saturator/coater | Total particulates | 6 | 5.3–29 | 8.03 | 12 |
| | Cyclohexane solubles | 6 | 0.66–1.3 | 0.88 | 0.91 |
| Apol and Okawa [1978], production of asphalt shingles and rolled roofing materials: | | | | | |
| Saturator operator | Total particulates | 1 | † | 2.4 | 2.4 |
| | Cyclohexane solubles | 1 | † | 0.76 | 0.76 |
| Coater | Total particulates | 2 | 12–16 | 14 | 14 |
| | Cyclohexane solubles | 2 | 0.21–1.1 | 0.47 | 0.64 |
| Wrapping machine operator | Total particulates | 1 | † | 1.4 | 1.40 |
| | Cyclohexane solubles | 1 | † | 0.77 | 0.77 |

See footnotes at end of table.

(Continued)

**Table 4–1 (Continued). Asphalt fume exposures for various occupations during manufacturing of roofing products**

| Reference, source of exposure, and occupation | Breathing-zone samples | | Exposure concentration (mg/m$^3$) | | |
|---|---|---|---|---|---|
| | Type* | Number | Range | Geometric mean | Arithmetic mean |
| Apol and Okawa [1978], continued: | | | | | |
| Lead man | Total particulates | 1 | †† | 5.3 | 5.29 |
| | Cyclohexane solubles | 1 | | 0.76 | 0.76 |
| Presser | Total particulates | 2 | 8.3–22 | 13 | 15 |
| | Cyclohexane solubles | 2 | 0.30–0.54 | 0.402 | 0.42 |
| Okawa and Apol [1978a], production of asphalt shingles and rolled roofing materials: | | | | | |
| Coater | Total particulates | 2 | 4.2–5.1 | 4.6 | 4.7 |
| | Cyclohexane solubles | 2 | 3.3–3.9 | 3.6 | 3.6 |
| Cooling section operator | Total particulates | 2 | 0.3–1.0 | 0.55 | 0.65 |
| | Cyclohexane solubles | 2 | 0.7–1.6 | 1.06 | 1.2 |
| Machine tender | Total particulates | 2 | 0.4–2.8 | 1.06 | 1.6 |
| | Cyclohexane solubles | 2 | 0.6–1.8 | 1.04 | 1.2 |
| Okawa and Apol [1978b], production of asphalt shingles and rolled roofing materials: | | | | | |
| Saturator operator | Total particulates | 1 | †† | 1.0 | 1.0 |
| | Cyclohexane solubles | 1 | | 2.1 | 2.1 |
| Coaterman | Total particulates | 1 | †† | 2.1 | 2.1 |
| | Cyclohexane solubles | 1 | | 0.22 | 0.22 |
| Slateman | Total particulates | 1 | †† | 3.4 | 3.4 |
| | Cyclohexane solubles | 1 | | 0.21 | 0.21 |
| Pozzoli et al. [1985], asphalted paper production: | | | | | |
| Paper production workers (smokers) | Total PAHs | 4 | 0.0048–0.036 | 0.009 | 0.014 |
| Paper production workers (nonsmokers) | Total PAHs | 2 | 0.0034–0.311 | 0.010 | 0.017 |

See footnotes at end of table.

(Continued)

**Table 4–1 (Continued). Asphalt fume exposures for various occupations during manufacturing of roofing products**

| Reference, source of exposure, and occupation | Breathing-zone samples | | Exposure concentration (mg/m³) | | |
|---|---|---|---|---|---|
| | Type* | Number | Range | Geometric mean | Arithmetic mean |
| AI [1991]; Hicks [1995], Roofing manufacturing (temperature of product at fume source from 300 to 468 °F [149 to 244 °C]): | | | | | |
| Loader/asphalt handler | Total particulates | 6 | 0.068–0.94 | 0.51 | 0.66 |
| | Benzene solubles | 6 | 0.041–0.71 | 0.31 | 0.41 |
| Slate blend operator | Total particulates | 4 | 1.1–13 | 3.9 | 5.6 |
| | Benzene solubles | 4 | 0.013–0.94 | 0.077 | 0.27 |
| Coater operator | Total particulates | 8 | 0.42–2.5 | 1.0 | 1.3 |
| | Benzene solubles | 8 | 0.049–1.6 | 0.2 | 0.37 |
| Machine operator | Total particulates | 8 | 0.8–4.4 | 1.6 | 1.9 |
| | Benzene solubles | 8 | <0.071–3.6 | 0.55 | 1.5 |
| Press operator/cooling operator | Total particulates | 7 | 0.55–11 | 2.6 | 4.8 |
| | Benzene solubles | 7 | <0.085–3.7 | 0.32 | 1.0 |
| Supervisor | Total particulates | 1 | † | 1.4 | 1.4 |
| | Benzene solubles | 1 | † | 0.32 | 0.32 |

*The sampling and analytical methods used for measuring benzene solubles and polynuclear aromatic hydrocarbon (PAH) concentrations may vary between studies and these results may not be directly comparable.
†Information not provided.

**Table 4–2. Exposures during manufacture of asphalt roofing products**

| Sample type | Range | Concentration (mg/m³) | | |
|---|---|---|---|---|
| | | Geometric mean (GSD)* | Arithmetic mean (SD) | Median |
| Total particulates | 0.068–13 | 1.4 (3) | 2.6 (3.1) | 1 |
| Benzene-soluble fraction | <0.071–3.7 | 0.27 (4.4) | 0.76 (1.1) | 0.24 |

Source: Adapted from Hicks [1995].
*Abbreviations: GSD = geometric standard deviation; SD = standard deviation.

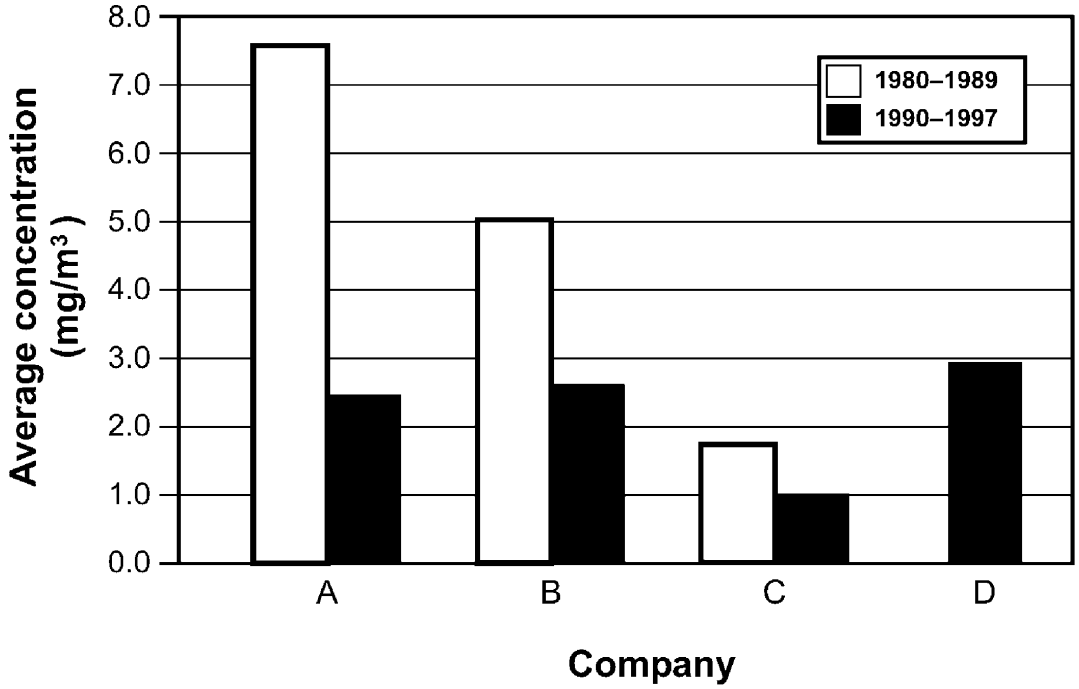


**Figure 4-1**. Total particulates pre- and post-1990, by company. (Source: Fayerweather [1998].)

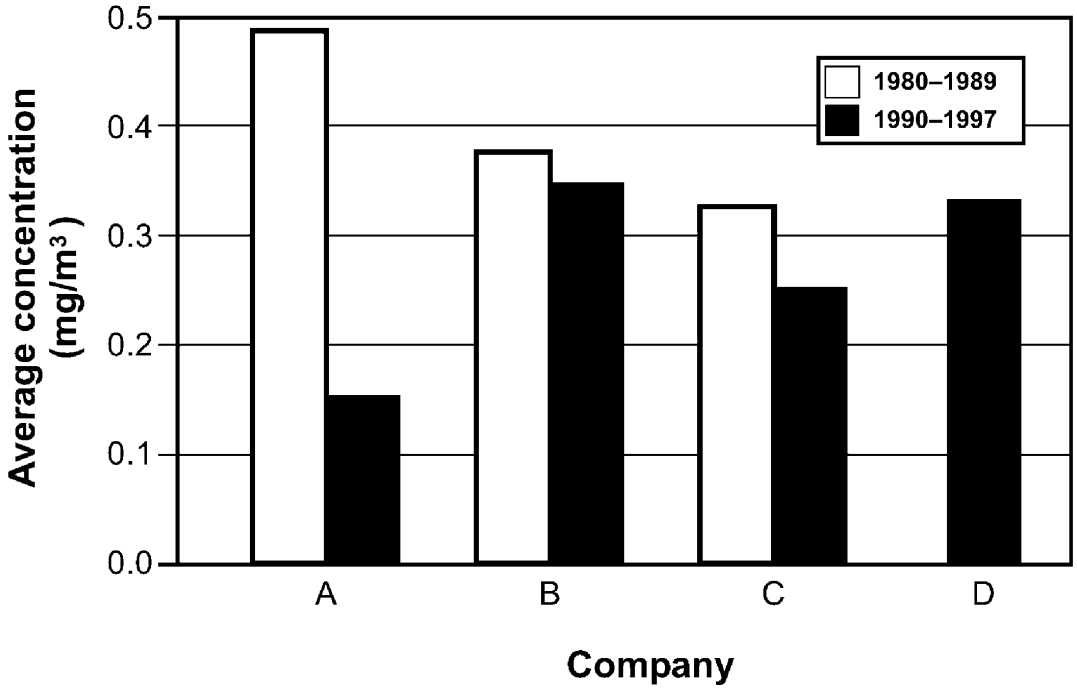


**Figure 4-2.** Benzene/cyclcohexane solubles pre- and post-1990, by company. (Source: Fayerweather [1998].)

## 4.3 OPERATIONS AND JOBS WITH POTENTIAL FOR ASPHALT FUME EXPOSURE

The basic manufacturing process for all asphalt roofing products is essentially the same, with slight modifications, depending on which product is being produced. Figure 3–1 presents the diagram of a typical asphalt roofing manufacturing line.

The operations that pose a potential for worker exposure to asphalt fumes involve hot liquid asphalt. These operations include the following:

- The delivery, in-plant transfer, and storage of asphalt flux and the various roofing asphalts used in the manufacturing process
- Unloading techniques—coupling flexible pipe to a tanker and pumping hot asphalt into appropriate storage tanks
- Pumping hot asphalt into a large open funnel connected to a surge tank, then pumping hot asphalt into storage tanks
- Incorporating mineral stabilizers to coat asphalts and, in the case of modified asphalt products, to blend polymers in mixing tanks
- Using the coater (or the impregnation vat in the case of modified bitumen products) where liquid coating asphalt is applied to the surfaces of the felts
- Using the saturator (which is used before or in lieu of coating in the case of organic felts) where the felts are sprayed with and then immersed in a saturant asphalt
- Conducting quality control activities associated with testing raw materials
- Conducting production activities with line breaks requiring maintenance
- Conducting off-line laminator operations where hot asphalt is heated and applied between two or three layers of shingles

# 5 GUIDELINES FOR PROTECTING WORKERS

This section describes available engineering controls, work practices, and personal protective equipment (PPE) used to reduce worker exposure to asphalt fumes in the roofing manu-facturing industry. Engineering controls include process substitution, isolation (enclosures), and general and local exhaust ventilation. Some of these methods may be used for other purposes such as energy conservation or compliance with other regulatory requirements. Information is provided on available engineering controls and work practices to reduce worker exposure to asphalt fumes for operations and jobs identified in Section 4.3.

## 5.1 DELIVERY, HANDLING, AND STORAGE

The following engineering controls are used to reduce worker exposure to asphalt fumes during the delivery, handling, and storage of hot asphalt.

### 5.1.1 Engineering Controls

Typically, a variety of tanks are used to contain hot asphalt in asphalt roofing manufacturing plants. These include storage tanks for delivered asphalt, saturant asphalts, and coating asphalts to be used in the production process; polymer and stabilizer mixing tanks in which asphalt coatings are made for conventional asphalt and modified bitumen roofing products; smaller-scale heating tanks for specialty operations such as laminating; and finished product tanks in plants that produce roofing asphalt for sale or shipment elsewhere.

Studies to determine the effectiveness of the following controls are necessary. Available engineering controls for reducing asphalt fume exposures include closed tanks. Asphalt fumes generated in these tanks may be vented directly to either the outside atmosphere or to one of several types of fume capture devices. Typical capture devices that can reduce the concentration of asphalt fumes and dusts released from these tanks or from blowing stills, coaters, and saturators include, but are not limited to, the following:

1. *Mist eliminators*, which use screening or coarse filter media (usually a permanent metal pad type) to remove droplets contained in the air steam

2. *High-velocity air filters or fiberbed filters*, which use disposable filter media to initiate condensation of condensable portions of the air steam

3. *Electrostatic precipitators*, which use static charge to capture particulate contained in the exhaust gases (however, be aware that operational and safety problems associated with asphalt buildup on the collection grids have limited the use of this process)

4. *Incinerators and regenerative thermal oxidizers*, which combust the exhaust gases and destroy the liquid droplets as

well as the condensable and gaseous volatiles contained in the exhaust gases

### 5.1.2 Work Practices

Reducing the concentration of asphalt fumes in the space above the hot asphalt also reduces the concentration of asphalt fumes emitted from the storage or processing tank through any openings (e.g., vents) that may be present. Asphalt is usually delivered to a plant by pipeline, truck, or rail. When pumping asphalt from the delivery vessel into the storage tank, receiving lines are attached to the storage tank below the liquid asphalt level (either by "bottom loading" or "submerged fill"). This practice helps reduce the emission of asphalt fumes during a loading operation.

The asphalt in the storage tanks is heated before its use in the manufacturing process. Excess heated asphalt is recirculated rather than returned to the storage tank to allow for lower storage temperatures of the asphalt. This procedure reduces the concentration of asphalt fumes emitted from the tank. Air sweeps* of storage tanks further reduce the concentration of asphalt fume in the space above the asphalt to a fraction of the lower explosive limit. Trumbore [1992] reported that recirculating excess asphalt to the start of the process and using air sweeps in the tank(s) lower the asphalt fume concentrations in storage tanks by 50% to 75%. Current asphalt fume concentrations average less than 25% of the lower explosive limit in all storage tanks where these controls are used.

## 5.2 SATURATORS

### 5.2.1 Engineering Controls

Complete enclosure, coupled with adequate exhaust ventilation is a commonly used engineering control for saturators. Typically, the enclosure includes not only the saturator but also the wet looper and, in some instances, the coater as well. Available fume-capture devices are the same as those discussed in Section 5.1.1 (mist eliminators, high-velocity air filters or fiberbed filters, electrostatic precipitators, and inciner-ators and regenerative thermal oxidizers).

In some plants, physical or operating constraints may make complete enclosure of the entire saturator-wet looper-coater series impractical. In these instances, canopy hoods with adequate local exhaust ventilation (LEV) can be used for the entire series of process units or for one process area such as the coater. Figure 5–1 depicts typical hood configuration.

### 5.2.2 Work Practices

The procedures for venting a totally enclosed coater are similar to those for saturators. For coaters with canopy hoods, the procedure for rethreading† a break in the line requires the operator to wear proper PPE including a respirator (see Appendix) when needed. The exhaust fans should remain in operation during the rethreading process.

---

*Air sweeping is the practice of exhausting the vapor space above an asphalt storage tank rather than allowing the tank to vent through working and breathing losses only. This practice is very effective at lowering the vapor concentrations above the liquid to only a fraction of the lower explosive limit. The volume of air exhausted from the vapor space is typically 60 to 100 cubic feet per minute (cfm). This exhaust stream is either filtered to remove condensable particulate or incinerated for volatile organic compounds (VOCs) and particulate destruction.

†Rethreading occurs at startup and following a line break. Whether at startup or following a line break, the process is similar. Line operators pull/feed the web (paper or fiber glass) through the machines and rolls on the line. All machines are stopped or slowed by a jog position during this process. If the rethreading process requires operators to feed the web through the saturator or coater, standard PPE for exposure to hot asphalt is recommended—that is, respirators, safety glasses, leather work gloves, and a long-sleeved shirt or leather/Kevlar forearm/upper-arm sleeves.

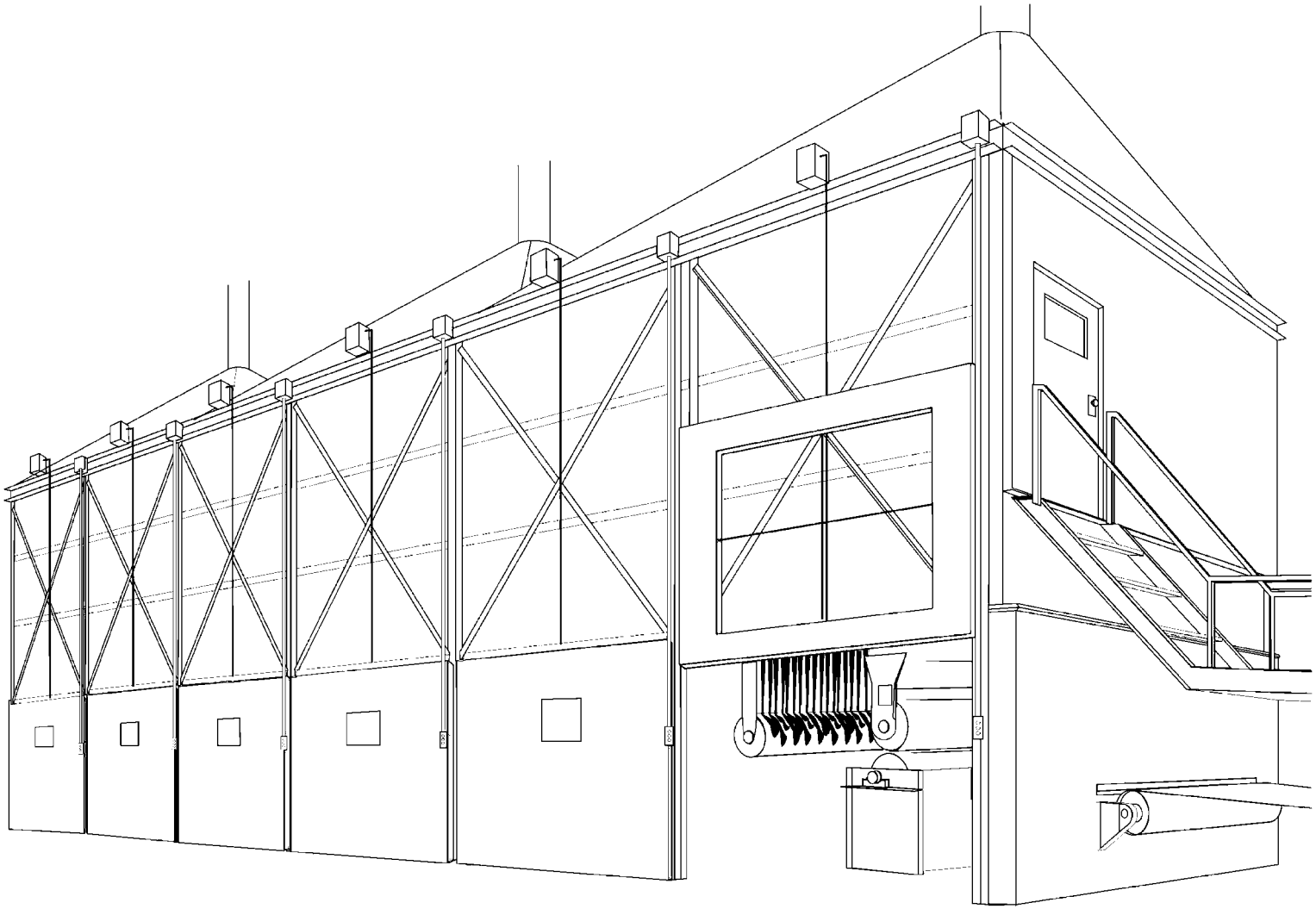

**Figure 5–1.** Total enclosure of saturator, wet looper, and coater. (Source: EPA [1988].)

### 5.2.3 Equipment Substitution

Another option for plants using saturators with both spray and dip processes is to rely exclusively on the dip process. The reduction in asphalt fume exposures in plants using the dip process has not been evaluated or quantified, although dip-only saturators are likely to generate lower airborne concentrations of asphalt fumes. The strong trend in the industry away from spray-process saturators has been generated by the need to reduce fire, explosion, and burn hazards associated with the spray processes. The switch to dip-only saturators has also been influenced by a variety of other factors, including the age and remaining useful life of the existing equipment; the cost and incremental exposure reduction benefits of a dip-only saturator; and the comparative costs and exposure reduction benefits of other available control options such as increased exhaust flow rates, improved door seals, reduced apertures in existing enclosures, and improved hood designs in existing LEV systems.

## 5.3 MODIFIED BITUMEN IMPREGNATION VATS

The emission of asphalt fumes from modified bitumen impregnation vats is controlled primarily with canopy hoods and adequate LEV. In many instances, these hoods extend over the cooling vats as well as the impregnation area.

## 5.4 COATERS

The capture of asphalt fumes at the coater is best achieved using either (1) full enclosure of the coating process (together with the saturator and wet looper) or (2) canopy hoods. In either case, adequate exhaust ventilation capacity is necessary to achieve complete capture of the roofing asphalt fumes generated by the coater. In some cases, extending the hood or canopy over the granule application section (which basically follows the coater) may be necessary to capture fumes emitted by the hot web after it has left the coater area.

### 5.4.1 Full Enclosure

The removal of asphalt fumes by all of the inplant exhaust ventilation systems should be routed to capture devices before discharge to the outside air. Examples of these capture devices include

—mist eliminators,
—high-velocity air filters or fiberbed filters,
—electrostatic precipitators, and
—incinerators and regenerative thermal oxidizers.

Section 5.1 gives more complete descriptions of these capture devices [EPA 1988]. All of these exhaust streams should be vented to the outside atmosphere after passing through the capture device.

Follow these practices to minimize asphalt fume exposure to workers outside the coater enclosure:

- Keep to a minimum the number and size of openings in the enclosure.
- Reduce the amount of time during which doors to the enclosure are open during normal production runs.
- Maintain proper exhaust capacity of the ventilation system at all times [ACGIH 1998].
- Keep the coater and saturator temperatures as low as manufacturing specifications and variables will tolerate.

Higher exhaust rates due to excessive openings can lower the capture efficiency of the ventilation systems. To minimize the potential for fume exposures, all doors should be sealed and remain closed during operation of the line. The size of the apertures where the sheet enters and leaves the saturator should be minimized to reduce the potential for exposure to fumes and to ensure inward air flow from the workplace by the negative pressure in the enclosure. Adequate makeup air to the plant facility is important to ensure optimal capture velocity of the exhaust ventilation systems.

Assuming that an adequate configuration for the enclosure and proper exhaust ventilation is in place, the greatest potential for asphalt fume ex-posure during the coating process is during maintenance and repair work on the coater. Exposures to asphalt fumes can occur when workers must enter the enclosure during the manufacturing operation to correct a break in the operation of the line (occurs primarily from breakage of the felt sheet). Workers may need to enter the enclosure up to three times in an 8-hr shift, and they usually spend 10 to 20 min cor-recting the problem. Follow these practices to ensure that fume exposure to the worker enter-ing the enclosure is minimized:

- Open all doors and increase the exhaust ventilation flow rate to reduce asphalt fume concentrations before entry.
- Ensure adequate space inside the enclosure to allow safe threading of the felt sheet and related maintenance activities.
- Wear proper PPE, including a respirator, as needed.

The exhaust ventilation rate in the enclosure must be sufficiently high to exhaust the asphalt fumes from the entire enclosure in the event of a break in the felt. Maintaining negative pressure in the enclosure is essential to prevent leakage of asphalt fumes into the work areas and to minimize fume concentrations inside the enclosure during the rethreading process. For formal maintenance during shutdowns, the equipment should be cooled and drained so that the potential for asphalt fume exposure is minimal.

### 5.4.2 Canopy Hood

In some plants, operational or plant configuration (layout) constraints preclude enclosure as a control option for coaters. These constraints are more likely to be found in older facilities where congested initial design or subsequent manufacturing modifications have created space restrictions. Therefore, enclosures cannot be installed without restricting access to process equipment or normal line operation. In these instances, asphalt fumes generated during the coating process can be collected by a canopy hood with adequate LEV.

Typical canopy hood dimensions vary from 5 to 8 ft in width and normally exceed the mat width by 2 to 3 ft. The length in the machine direction is typically 6 to 14 ft. Exhaust ventilation flow rates from canopy hoods located above the coater range from 4,000 to 8,000 cfm. The vertical distance from the felt line to the hood opening should be minimized for optimal capture of the fume. Enclosure of the sides perpendicular to mat flow varies by facility. Insets in the canopy hood to block internal area and increase capture velocity at the hood periphery have proved effective in increasing fume capture efficiency. Cross air currents in the work area should be minimized to prevent interference of fume capture at the canopy hood.

## 5.5 SURFACING AND SUBSEQUENT PROCESSES

After the saturation and coating processes, the asphalt is no longer heated and asphalt fume generation decreases as the product cools. Typically, some release of asphalt fume occurs as the impregnated felt leaves the coater area; however, the felt sheet is immediately covered by a layer of granules and mineral-parting agents. The deposit of this mineral coating onto the felt sheet helps in the cool-down process of the asphalt and decreases the release of asphalt fume.

The application of the mineral-parting agents generates the release of inorganic mineral dust. The dust contributes to the airborne concentration of particulates in the mineral application and cooling process areas of the plant. LEV is generally installed at granule applicators, slate drums, dust drums, backdust applicators, and transfer rolls to reduce dust exposure. The amount of asphalt fume captured is probably determined by the proximity of the LEV system to where mineral granules are applied to the asphalt on the felt sheet. Owens Corning [1993a,b] reported that VOC emissions from the cooling section of the process are greatly reduced when there is effective dust collection before cooling. All manufacturers use local dust collection with capture in a bag-type dust collector. Dust collection flow rates vary significantly because of differences in plant configurations; they range up to 30,000 cfm.

Some general dilution ventilation occurs in the manufacturing buildings as a result of additional air being exhausted from the cooling sections of the manufacturing line. Although general venti-lation of the manufacturing buildings varies widely in roofing manufacturing, it contributes to reducing exposures to asphalt fume. The types of ventilation systems used range from gravity ventilators (which provide makeup air to the process) to power ventilators (which exhaust large air volumes from the process building).

After the cooling process, the temperature of the product is lowered to near ambient temperatures and asphalt fume generation is minimal. Asphalt fume exposures may occur during the application of both sealant asphalt to shingle products and laminating asphalt to laminated shingle products [Owens Corning 1993a,b].

These low-mass asphalt applications are applied from Star Wheel applicators or by means of asphalt extruders. LEV is installed at the point of asphalt application. Asphalt application temperatures are generally in the range of 250 to 400 °F (120 to 205 °C), but the sealant asphalt is cooled almost instantaneously by water, air, or soap solutions. Laminating asphalt is cooled by water baths or other means to eliminate product sticking. Because of the relatively small amounts of asphalt used in these processes and rapid cooling, fume generation is probably minimal; however, no data have been reported on the fume exposure that may occur during this process.

## 5.6 WORK PRACTICES AND PPE

Good work practices and PPE should be used to prevent injury from combustion, explosion, or contact with hot asphalt. Before entering any enclosed area in a manufacturing plant, the area must be vented to remove asphalt fumes and ensure that adequate oxygen is available for workers. The equipment to be repaired must also be cooled to reduce the potential for burns. Maintenance work in potentially hazardous areas such as asphalt tanks, saturators, and coaters should be restricted to those personnel who are adequately trained and required to be in the area. Proper use of PPE, including respirators (see Appendix), should be mandatory.

PPE that may be used during these operations includes the following:

- Safety glasses
- Face shields
- Long-sleeved shirts
- Respirators
- Coveralls or body suits
- Gloves
- Safety shoes

Appropriate PPE will reduce both dermal and inhalation exposures to asphalt fumes.

Effective work practices play an important role in preventing asphalt fume exposures and reduc-ing the risks of acute and chronic health effects. For example, all operational instruments and fume control equipment must be properly maintained to ensure that they are effective in reducing asphalt fume exposures. Where respiratory pro-tection is provided, all applicable OSHA require-ments should be followed in accordance with a written respirator program, including use of NIOSH-approved respirators, training, fit-testing, and medical approval, as well as proper inspec-tion, cleaning, maintenance, repair, and storage of respirators [29 CFR[‡] 1910.134].

[‡]*Code of Federal Regulations.* See CFR in references.

# 6 RESEARCH NEEDS

The following research is suggested to reduce the risk of adverse health effects from occupational exposure to asphalt fumes during the manufacture of asphalt roofing products:

- Characterization of worker exposure to asphalt fumes in this segment of the industry (of particular interest are exposures during high-temperature operations)
- Identification of short-term peak exposures as well as work shift TWA exposures
- Determination of the effectiveness of current engineering controls in reducing worker exposure to asphalt fumes

# REFERENCES


ACGIH [1998]. Industrial ventilation, a manual of recommended practices. 23rd ed. Cincinnati, OH: American Conference of Governmental Industrial Hygienists.

ACGIH [2001]. 2001 TLVs® and BEIs®: threshold limit values for chemical substances and physical agents; biological exposure indices. Cincinnati, OH: American Conference of Governmental Industrial Hygienists.

AI [1990a]. Report to OSHA and NIOSH: status of Asphalt Industry Steering Committee research program on the health effects of asphalt fumes and recommendation for a worker health standard. Lexington, KY: Asphalt Institute.

AI [1990b]. Introduction to asphalt. 8th ed. Lexington, KY: Asphalt Institute, Manual Series No. 5 (MS–5).

AI [1991]. Final report: asphalt industry cross sectional exposure assessment study. Text and Appendix A. College Park, MD: Asphalt Institute.

Apol AG, Okawa MT [1977]. Hazard evaluation and technical assistance report: Certain-Teed Products, Inc., Tacoma, WA. Cincinnati, OH: U.S. Department of Health, Education, and Welfare, Public Health Service, Center for Disease Control, National Institute for Occupational Safety and Health, NIOSH HHE Report No. 76–55–443, NTIS No. PB–81–143–984/A02.

Apol AG, Okawa MT [1978]. Hazard evaluation and technical assistance report: Herbert Malarky Roofing Co., Portland, OR. Cincinnati, OH: U.S. Department of Health, Education, and Welfare, Public Health Service, Center for Disease Control, National Institute for Occupational Safety and Health, NIOSH HHE Report No. 76–56–458, NTIS No. PB–82–193–996/A02.

ARMA [1997]. Residential asphalt roofing manual. Calverton, MD: Asphalt Roofing Manufacturers' Association.

ARMA [2001]. Telephone conversation on June 14, 2001, between Russ Snyder, Asphalt Roofing Manufacturers' Association (ARMA) and Joann Wess, Education and Information Division, National Institute for Occupational Safety and Health, Centers for Disease Control and Prevention, Department of Health and Human Services.

ASTM [1995]. 1995 Annual book of ASTM standards. Standard specification for asphalt used in roofing. Designation D312–95a. West Conshohocken, PA: American Society for Testing and Materials, pp. 49–50.

Boduszynski M [1981]. Asphaltenes in petroleum asphalts: composition and formation. In: Bunger JW, Li NC, eds. Chemistry of asphaltenes. Washington, DC: American Chemical Society, pp. 119–135.

Campbell PG, Wright JR [1966]. Oxidation products in an oxygen-blown Kuwait asphalt. I & EC Prod Res Develop *5*(4):319–323.

CFR. Code of Federal regulations. Washington, DC: U.S. Government Printing Office, Office of the Federal Register.

Corbett LW [1975]. Reaction variables in the air blowing of asphalt. Ind Eng Chem Process Des Dev *14*(2):181–187.

Corbett LW [1979]. Manufacture of petroleum asphalt. In: Hoiberg A, ed. Bituminous materials: asphalt, tars, and pitches. Vol. II. Huntington, NY: Krieger Publishing Company, pp. 81–122.

EPA [1988]. Review of new source performance standards for asphalt processing and asphalt roofing manufacture. Preliminary draft. Research Triangle Park, NC: U.S. Environmental Protection Agency, Office of Air and Radiation, Office of Air Quality Planning and Standards.

Exxon [1997]. Shift study of pulmonary function and symptoms in workers exposed to asphalt fumes. Final report submitted to Asphalt Industry Oversight Committee. East Millstone, NJ: Exxon Biomedical Sciences, Inc., Report No. 97TP31.

Fayerweather WE [1998]. Memorandum of January 5, 1998, from W.E. Fayerweather, Corporate Epidemiologist, Health Sciences, Owens Corning, to J.A. Wess, Education and Information Division, National Institute for Occupational Safety and Health, Centers for Disease Control and Prevention, Public Health Service, U.S. Department of Health and Human Services.

53 Fed. Reg. 21193 [1988]. Occupational Safety and Health Administration. Proposed rules: asphalt fumes. Washington, DC: U.S. Government Printing Office, Office of the Federal Register.

54 Fed. Reg. 2679 [1989]. Occupational Safety and Health Administration: air contaminants, final rule. Washington, DC: U.S. Government Printing Office, Office of the Federal Register.

57 Fed. Reg. 26182 [1992]. Occupational Safety and Health Administration: proposed rules. Washington, DC: U.S. Government Printing Office, Office of the Federal Register.

Freese and Nichols, Inc. [1994]. Specifications SW–1695 for Roswell Airport traffic control tower, Roswell Industrial Air Center. Department of Transportation, Federal Aviation Admin-istration, Southwest Region. Fort Worth, TX: Freese and Nichols, Inc., Consulting Engineers.

Goppel JM, Knotnerus J [1955]. Fundamentals of bitumen blowing. In: Proceedings of the Fourth World Petroleum Congress, Section III/G, Paper 2, pp. 399–413.

Hicks JB [1995]. Asphalt industry cross-sectional exposure assessment study. Appl Occup Environ Hyg *10*(10):840–848.

IARC [1985]. IARC Monographs on the evaluation of the carcinogenic risk of chemicals to humans: polynuclear aromatic compounds. Part 4: bitumens, coal tars and derived products, shale-oils and soots. Vol. 35. Lyon, France: International Agency for Research on Cancer.

King RW, Puzinauskas VP, Holdsworth CE [1984]. Asphalt composition and health effects: a critical review. Washington, DC: American Petroleum Institute.

Moschopedis SE, Speight JG [1973]. Oxidation of petroleum fractions. Fuel *52*:83.

NIOSH [1977]. Criteria for a recommended standard: occupational exposure to asphalt

fumes. Cincinnati, OH: U.S. Department of Health, Education, and Welfare, Public Health Service, Center for Disease Control, National Institute for Occupational Safety and Health, DHEW (NIOSH) Publication No. 78–106, NTIS Publication No. PB–277–333.

NIOSH [1987a]. NIOSH guide to industrial respiratory protection. Cincinnati, OH: U.S. Department of Health and Human Services, Public Health Service, Centers for Disease Control, National Institute for Occupational Safety and Health, DHHS (NIOSH) Publication No. 87–116.

NIOSH [1987b]. NIOSH respirator decision logic. Cincinnati, OH: U.S. Department of Health and Human Services, Public Health Service, Centers for Disease Control, National Institute for Occupational Safety and Health, DHHS (NIOSH) Publication No. 87–108.

NIOSH [1988]. NIOSH testimony on the Occupational Safety and Health Administration's pro-posed rule on air contaminants, August 1, 1988, OSHA Docket No. H–020. NIOSH policy state-ments. Cincinnati, OH: U.S. Department of Health and Human Services, Public Health Service, Centers for Disease Control, National Institute for Occupational Safety and Health.

NIOSH [1994]. NIOSH manual of analytical methods. 4th ed. Cincinnati, OH: U.S. Department of Health and Human Services, Public Health Service, Centers for Disease Control and Prevention, National Institute for Occupational Safety and Health, DHHS (NIOSH) Publication No. 94–113.

NIOSH [1996]. NIOSH guide to the selection and use of particulate respirators certified under 42 CFR 84. Cincinnati, OH: U.S. Department of Health and Human Services, Public Health Service, Centers for Disease Control and Prevention, National Institute for Occupational Safety and Health, DHHS (NIOSH) Publication No. 96–101.

NIOSH [1998]. NIOSH manual of analytical methods. Supplement 2. Cincinnati, OH: U.S. Department of Health and Human Services, Public Health Service, Centers for Disease Control and Prevention, National Institute for Occupational Safety and Health, DHHS (NIOSH) Publication No. 98–119.

NIOSH [2000]. NIOSH Hazard Review: health effects of occupational exposure to asphalt. Cincinnati, OH: U.S. Department of Health and Human Services, Public Health Service, Centers for Disease Control and Prevention, National Institute for Occupational Safety and Health, DHHS (NIOSH) Publication No. 2001–110.

NRCA [1995]. 1995–1996 annual market survey. Rosemont, IL: National Roofing Contractors Association.

NRCA [1996]. NRCA roofing and waterproofing manual. 4th ed. Rosemont, IL: National Roofing Contractors Association.

Okawa MT, Apol AG [1977]. Hazard evaluation and technical assistance report: Certain-Teed Products, Inc., Richmond, CA. Cincinnati, OH: U.S. Department of Health, Education, and Welfare, Public Health Service, Center for Disease Control, National Institute for Occupational Safety and Health, NIOSH HHE Report No. 76–54–436, NTIS No. 89–140–198.

Okawa MT, Apol AG [1978a]. Hazard evaluation and technical assistance report: Johns-Manville Products Corporation, Vernon, CA. Cincinnati, OH: U.S. Department of Health, Education, and Welfare, Public Health Service, Center for Disease Control, National Institute

for Occupational Safety and Health, NIOSH HHE Report No. 77–57–460, NTIS No. PB–82–197–435/A02.
Okawa MT, Apol AG [1978b]. Hazard evaluation and technical assistance report: Johns-Manville Products Corporation, Pittsburg, CA. Cincinnati, OH: U.S. Department of Health, Education, and Welfare, Public Health Service, Center for Disease Control, National Institute for Occupational Safety and Health, NIOSH HHE Report No. 77–56–467, NTIS No. PB–291–657/A02.

Owens Corning [1993a]. Internal document: Owens/Corning Fiberglas Environmental Affairs, air emission sampling data. Granville, OH: Owens Corning Science and Technology. Unpublished.

Owens Corning [1993b]. Internal document: Owens/Corning Fiberglas Environmental Services, roofing plant process data. Granville, OH: Owens Corning Science and Technology. Unpublished.

Petersen JC, Barbour FA, Dorrence SM [1975]. Identification of dicarboxylic anhydrides in oxidized asphalts. Anal Chem *47*(1):107–111.

Pozzoli L, Cottica D, Maugeri U, Clonfero E [1985]. PAH in air and in biological fluids: experimental surveys to establish the TLV. Ann Am Conf Ind Hyg *12*:317–320.

Roberts FL, Kandhal PS, Brown ER, Lee D-Y, Kennedy TW [1996]. Hot mix asphalt materials, mixture design and construction, 2nd ed. Lanham, MD: NAPA Research and Education Foundation.

Sax NI, Lewis RJ [1987]. Hawley's condensed chemical dictionary. 11th ed. New York: Van Nostrand Reinhold Co.

Speight JG [1992]. Asphalt. In: Kroschwitz JI, Howe-Grant M, eds. Kirk-Othmer encyclopedia of chemical technology. 4th ed. Vol. 3. New York: John Wiley & Sons, Inc., pp. 689–724.

Trumbore DC [1992]. Asphalt tank explosion hazards: appendix for report 92–T–56. Granville, OH: Owens Corning Science and Technology, Owens Corning Memo Report 92–T–57, August 17.

# APPENDIX

## RESPIRATORS

Respiratory protection may be needed if available engineering controls and work practices are ineffective in keeping asphalt fume exposures below the NIOSH REL of 5 mg/m$^3$ (total particulates measured as a 15-min ceiling) or other applicable State or Federal standards. However, respirator use should be the last resort for controlling exposures. If respirators are required at the worksite, the employer is responsible for ensuring that respirators are NIOSH-approved and that all OSHA regulations pertaining to the implementation of a respirator program are followed. Important elements of these OSHA regulations include the following [29 CFR 1910.134]:

- An evaluation of the worker's ability to perform the work while wearing a respirator
- Regular training of workers
- Periodic environmental monitoring
- Respirator fit-testing, maintenance, inspection, cleaning, and storage
- Periodic changing of cartridges
- Cartridge testing for service life

No NIOSH-approved respirator filter cartridge or canister exists specifically for asphalt fumes or aerosols. But the respirators listed below can reduce exposures:

- Any half-facepiece, air-purifying respirator equipped with a combination R100 or P100 filter and an OV (organic vapor) cartridge, or
- Any powered, air-purifying respirator (PAPR) with a hood, helmet, or loose-fitting facepiece equipped with a combination high-efficiency particulate air (HEPA) filter and OV cartridge.

***Note:*** The appropriate respirator filters are R100, P100, or HEPA, as listed under 42 CFR 84 [NIOSH 1996]. The appropriate OV cartridge or canister should contain a charcoal sorbent.

A comprehensive assessment of workplace exposures should always be performed to ensure that the proper respiratory protection is used. Other types of respirators can provide a higher level of protection and may be required under certain conditions (e.g., work in confined spaces) [NIOSH 1987a,b].

Workers may voluntarily choose to use respiratory protection when asphalt fume exposures are below the NIOSH REL or other applicable Federal and State standards. When respirators are used voluntarily by workers, the employer needs only to establish those

respirator program elements necessary to assure that the respirator itself is not a hazard [29 CFR 1910.134]. The exception is that filtering-facepiece respirators (e.g., any 95 or 100 series filter) can be used without a respirator program when used voluntarily.