Ground Control in Mining

21st International Conference

August 6 - 8, 2002

Sponsors

US National Institute for Occupational Safety and Health
US Mine Safety and Health Administration
West Virginia Coal Association
West Virginia University

ANCHORAGE PULL TESTING FOR FULLY GROUTED ROOF BOLTS

Christopher Mark, *Rock Mechanics Team Leader*
Craig S. Compton, *Engineering Technician*
David C. Oyler, *Mechanical Engineer*
Dennis R. Dolinar, *Mining Engineer*
National Institute for Occupational Safety and Health
Pittsburgh Research Laboratory
Pittsburgh, Pennsylvania USA

ABSTRACT

Fully-grouted roof bolts comprise more than 80% of the primary roof supports used in U.S. coal mines. However, nearly 1,500 MSHA reportable, non-injury roof falls occur each year, and most of these are attributable to failure of the roof bolt system. Anchorage failure is one failure mechanism for fully-grouted bolts. As roof deformation works its way upward, the bolts can become heavily loaded near their upper ends. If the applied load exceeds the anchorage, the bolts will simply pull out. Research dating back 30 yrs indicates that this type of anchorage failure is most likely when the roof rock is weak, just where roof support is most critical. In soft shale or coal roof, the small amount of data available in the literature indicates that 20-30 in of resin anchorage may be required to achieve the full capacity of the bolt. In other words, the "full resistance zone" of a 60 in bolt may actually be just 30-40 in.

Despite its potential importance, there is no widely accepted anchorage test for fully grouted bolts. Standard pull tests have sometimes been employed, but they provide no information on the anchorage near the top of the bolt. An alternative, first described more than 25 yrs ago in the U.S., is the short-encapsulation pull test (SEPT). With this test, the bolt is installed with only a short (1 ft or less) tube of resin. In recent years variations of this test have become international standards.

This paper describes recent studies using short encapsulation pull tests in the U.S. Tests were conducted in the National Institute for Occupational Safety and Health (NIOSH) Safety Research Coal Mine at Bruceton and at underground mines in Pennsylvania and West Virginia. The study found that the SEPT can be used to make a simple evaluation of resin bolt anchorage. Suggested procedures for conducting SEPT are included. The study also confirmed that poor anchorage can be an issue, particularly where the roof rock is very weak. Some simple techniques for improving anchorage, and thereby the effectiveness of fully grouted bolts, are discussed.

INTRODUCTION

Each year, about 10,000 miles of underground entries are developed in U.S. coal mines. Approximately 80 million roof bolts are installed to support these roadways, at an installed cost of more than $500 million (1). The vast majority of the bolts, more than 80% of the total, are fully grouted (2).

Despite this effort and investment, MSHA statistics show that nearly 1,500 non-injury roof falls are reported each year. The big majority extend higher than the anchorage horizon of the bolts. Each of these large roof collapses represents a failure of the roof bolting system.

NIOSH has been working to develop better techniques to help mine operators select and evaluate their roof bolts. These include:

- *Analysis of Roof Bolt Systems (ARBS) Computer Program* evaluates the length, capacity, and density of a roof bolt pattern. It is based on statistical back-analysis of roof fall experience at a broad spectrum of coal mines (3), and allows mine operators to compare their current design to an industry-wide benchmark.

- *Trouble-Shooting Guide for Roof Support Systems (TGRSS) Computer Program* is based on the MSHA handbook written by Mazzoni et al. (4). It provides a comprehensive, logical, step-by-step method for improving roof bolt performance.

- *Field evaluations of roof bolt performance* using instrumented fully-grouted roof bolts and a standard suite of roof monitoring have been presented (5, 6).

A fourth technique is described in this paper. It focuses on a seldom-recognized, but potentially serious, issue of the anchorage of fully grouted bolts. When a mine is experiencing roof fall problems, the first response is often to change the *length* of the bolts. If the anchorage is poor, however, improving the anchorage might be a more appropriate response. A simple field test to evaluate the anchorage, the *short-encapsulation pull test* (SEPT), is described here.

FAILURES OF FULLY GROUTED BOLTS

Fully grouted bolts are loaded by movement of the rock. The movement may be vertical sag, shear along a bedding plane, or dilation of a roof layer buckled by horizontal stress (figure 1). The movements cause tensile forces in the bolt, usually combined with bending stresses.

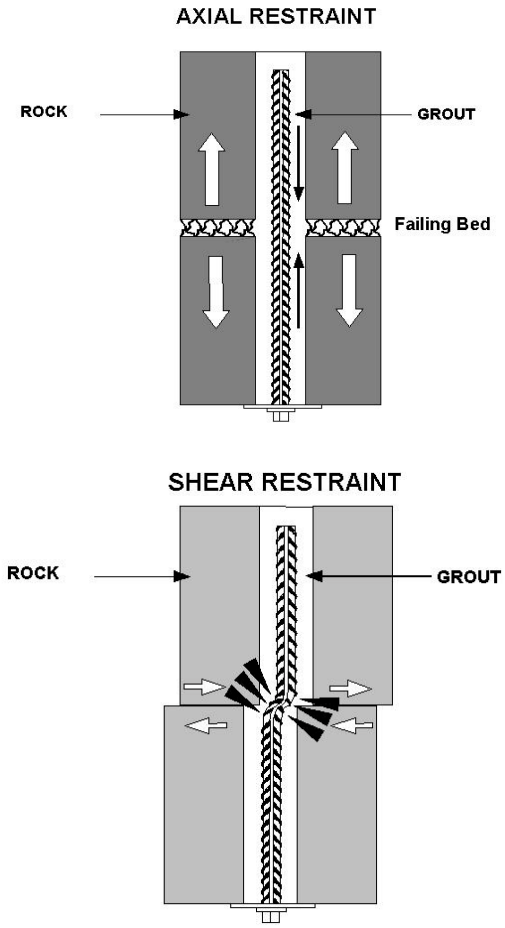

Figure 1. Loads in fully grouted roof bolts caused by roof movements. (Top) Tension resulting from bed dilation or bed separation; (Bottom) Tension and bending caused by slip on a bedding plane.

Depending on where the roof movements are concentrated, the bolts can fail in one of three ways, as shown in figure 2 (7, 8):[1]

- The head or the plate can fail;
- The rod may break, either in tension, or a combination of tension and bending; or
- The anchorage may fail.

The anchorage can fail when roof movement occurs near the top of the hole, as shown in figure 2c. If the load applied to the bolt exceeds the strength of the grout anchor, the top of the bolt will be pulled out of the hole. If the bolt had been suspending weak or failed lower roof from intact upper rock, a roof fall can follow.

Roof falls can sometimes provide clues as to the type of bolt failure that took place. If broken bolts can be seen, the anchorage was probably adequate, and the problem may have been that the capacity of the bolts was inadequate to resist the loads applied by the roof (as in figure 2b). But if the tops of resin bolts can be seen protruding from the top of the muck pile after a fall, then inadequate anchorage should be suspected (figure 2c and figure 3).

[1]In addition, the roof bolts may be intact, but the support system can fail if the *bolts are too short*, allowing the roof to fail above them; or the *bolts fail to provide adequate skin control*, allowing loose rock to create a hazard.

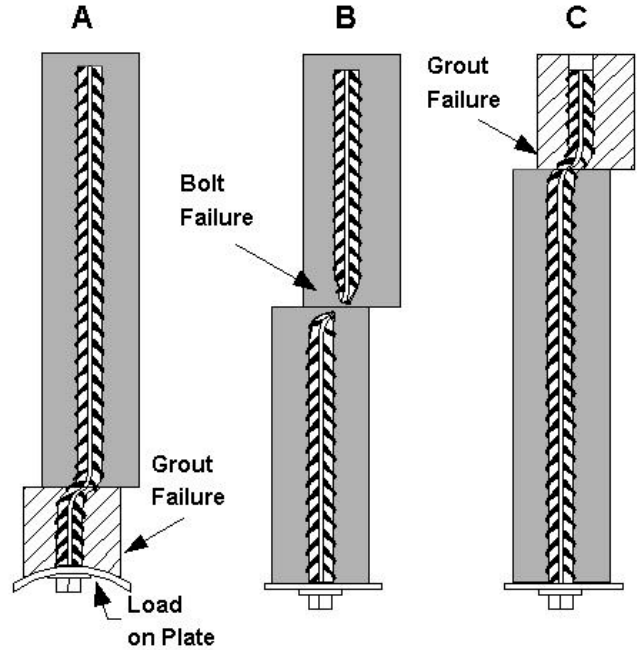

Figure 2. Failure mechanisms of a fully grouted roof bolt. (A) Roof movement near head; (B) Roof movement in central portion; (C) Roof movement in anchorage zone.

Figure 3. Photograph showing fully grouted bolts pulled from their holes in a roof fall.

ANCHORAGE OF FULLY GROUTED BOLTS

A fully grouted bolt anchors itself by frictional interlock between the resin and the rock. The effectiveness of the interlock is measured by the "Grip Factor,"[2] which is defined as *the bolt's resistance to pullout per inch of bolt length*.

[2]In the literature, what this paper calls the "Grip Factor" has also been referred to as the "Bond Factor" or the "Anchorage Factor."

Table 1 Grip factors for fully grouted resin bolts.

Rock type	Country	Grip Factor, (tons/in)	Length for 10 tons of anchorage, (in)	Reference
Coal, shale	Australia	0.7-2.1	4-12	Yearby (14)
Hard sandstone, limestone	Australia	2.3-5.8	1.4-3.6	Yearby (14)
Minimum allowable[1]	U.K.	1.1	8.9	H&SE (10)
Soft rock	U.S.A.	0.5	20	Peng (15)
Strong rock	U.S.A.	2	5	Peng (15)

[1]Over at least 50% of the bolt length.

The Grip Factor must be determined by loading the upper portion of the grouted bolt. This is accomplished with short encapsulation pull tests (SEPT), in which only the top 12 in of the bolt is grouted (figure 4). The Grip Factor (tons per inch) is calculated as:

Grip Factor = Maximum SEPT Load (tons)/12 in

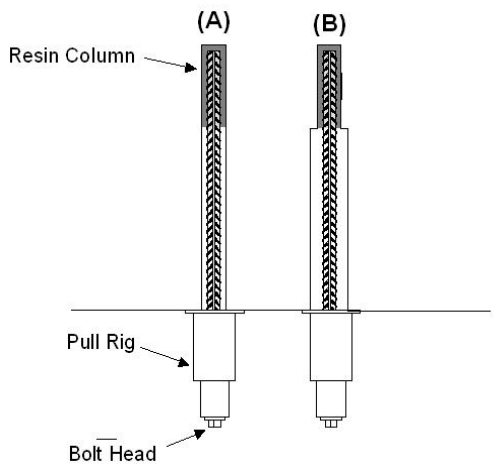

Figure 4. The Short Encapsulation Pull Test. (A) Normal hole; (B) Reamed hole.

SEPT have been used since the earliest days of resin bolts (9). They are widely employed internationally today, and are even required in the U.K. (10). In the U.S., Karabin and Debevec (11) reported some valuable results obtained from SEPT, and recommended that "pull tests of approximately one foot of grouted length should be made from time to time, to ensure that the resin used is of good quality."[3]

Figure 5 illustrates the effect of the Grip Factor on bolt performance. Within the anchorage zone (the upper portion of the bolt), the bolt's available resistance to loading from rock movement may be considerably less than its nominal yield strength. The length of the anchor (L_{Anch}, in in) is the bolt's yield load (Y, in tons) divided by the Grip Factor (GF):

$$L_{Anch} = Y / GF$$

[3]Standard pull tests cannot be used on bolts that are fully grouted for their entire length. Such a test only measures the strength of the rod, because the pulling forces seldom extend more than 18-24 in up the resin column (8, 12, 13).

Obviously, a bolt with a larger Grip Factor will have more available resistance over a longer length, as shown in figure 5b. In fact, the "Full Resistance Length" (L_{FR}) of a fully grouted bolt, which is the zone in which the force available to resist rock movement is at least equal to the yield strength of the bolt, is the total bolt length L minus the length of the anchor:

$$L_{FR} = L - L_{Anch}$$

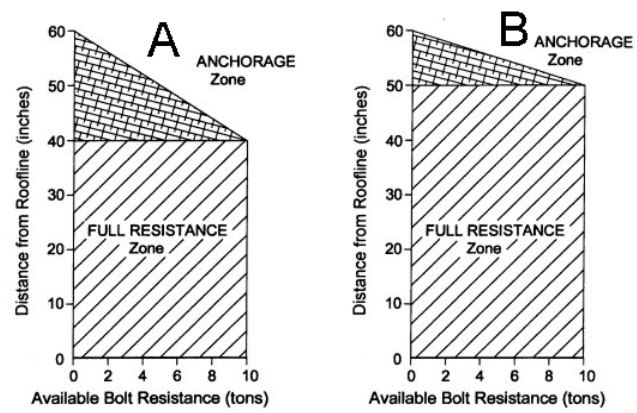

Figure 5. Effect of the Grip Factor on the resistance available from 10-ton roof bolts to react against roof loads. (A) Grip Factor = 0.5 tons/in; (B) Grip Factor = 1.0 ton/in.

CAUSES OF POOR RESIN BOLT ANCHORAGE

The two most likely causes of poor anchorage are *weak rock* and *poor installation.*

Weak Rock: Testing has consistently shown that weaker rock requires a longer grouted length to achieve the same anchorage as strong rock (9, 11). Table 1 gives typical Grip Factors (and associated anchorage lengths) obtained from the literature. Short encapsulation tests are apparently rather rare in the U.S.; the only available published data were obtained from Peng (15). These test results imply that in the U.S., the top 20 in or more of a fully grouted bolt may be required to develop an anchorage force equal to the breaking strength of the rod. In very weak rock, Grip Factors can be so low that 6-ft bolts have been pulled from the rock at 14 tons even though they were fully grouted for their entire length (16)!

Perhaps the most extensive study of resin bolt anchorage in the U.S. was conducted by the former U.S. Bureau of Mines in the mid-80's (17). More than 1,000 pull tests were conducted at 11 underground coal mines throughout the U.S. The tests involved

anchorage lengths of 12, 18, 24, 36 and 48 in. The anchorage length was considered adequate when 90% of the tested bolts reached the yield load of the steel. The study found that coal and shale roofs required an average of *31 in* of grouted length to meet this criterion. Sandstone required 18 in on average, and limestone needed just 12 in.

Poor Installation Quality: The TGRSS computer program (4) identifies a number of factors that can result in poor anchorage with fully grouted bolts. These include:

- *Defective grout* can result from improper storage (too hot, too cold, too wet, or shelf life exceeded), or (rarely) from manufacturing problems.
- *Improper mixing* can occur if the proper spin time is not followed. Underspinning can result in inadequate mixing, while overspinning can destroy the partially cured resin. Improper mixing can also occur with long bolts where the top of the hole has less time to mix before the bottom sets up. The temperature of the resin at the time of installation can also affect the cure time.
- *Improper holes* can be too long, too short, too large, or too smooth. The proper grout cartridge must also be matched to the hole and the bolt being installed.
- *Finger gloving* occurs when the plastic cartridge wrapper remains intact around the hardened resin. It is more likely if the bolt is not rotated as it is inserted in the hole (18).

DEVELOPMENT OF A U.S. STANDARD SHORT ENCAPSULATION PULL TEST

The primary goal of this study was to develop SEPT procedures that could be widely used in U.S. mines. The test focuses primarily on No. 5 Gr. 60 and No. 6 rebar, which together constitute the great majority of U.S. roof bolt installations. It is designed to be a simple "green/yellow" test where:

- **Green** means that a 12-in encapsulation length achieves the yield strength of the rebar (at least 9 tons, and often10-11 tons, for No. 5-Gr. 60 and No. 6-Gr. 40 rebar; and about 14 tons for No. 6- Gr. 60 rebar), and;
- **Yellow** means that the anchorage obtained from 12 in of encapsulation is less than the yield strength of the rebar.

The test is also designed to be quick and simple, and to require a minimum of specialized equipment. A detailed description of the test procedure is included in the Appendix.

While simple in concept, international procedures for SEPT have differed in a number of details:

- **Encapsulation length:** The international consensus seems to be that at least 12 in of the bolt should be grouted to minimize the effect of the zones of poor mixing at the top and the bottom of the resin (19). Shorter and longer lengths have sometimes been used, however.
- **Hole depth:** In the U.S., production roof bolt holes are often overdrilled by 1 in (4). The overdrill presumably provides a space for the resin cartridge wrapping, clips, etc, while also providing a margin of error against underdrilling. When conducting an SEPT, however, it is important that correct encapsulation length be obtained, and overdrilling might result in a miscalculation of the amount of resin used.
- **Hole Reaming:** One method to ensure the correct encapsulation length is to ream the lower portion of the hole to a larger diameter (figure 4b). Then only the upper, unreamed portion of the hole is effectively grouted. This method is employed internationally, though an unreamed test is also allowed in the U.K. under certain conditions (10, 20). Reamed holes also make it possible to pull the bolt completely out, so that the resin anchor can be viewed.

A series of 56 bolts were pulled in the NIOSH Safety Research Coal Mine (SRCM) at Bruceton to help develop the test. Both No. 5 and No. 6 bolts were tested in 1-in holes, and the effects of hole depth and hole reaming were evaluated.

The tests were conducted at the ends of a dead-end entry and adjacent crosscut. Two coreholes were drilled to determine the most suitable horizon for performing the tests. The first consistent horizon of sufficient thickness that was not coaly was a weak claystone about 5.5 ft above the roofline. Bolt lengths were standardized at 79.5 in, not including the bolt head. The long bolts and a relatively low mine roof made it necessary to bend the bolts to install them. This may have had some effect upon resin mixing, since it may have made the bolts crooked. Since the bends were several feet below the bolting horizon and since none of the bolts reached yield, the bends are not believed to have had an effect on the bolt strength.

In order to ensure consistent drilling depths, the steels were marked and checked each day, and all drilling was performed with the same drill steels. Because the horizons drilled were so soft, bit wear was found to be minimal during the tests. Bit diameters were measured regularly, and no significant change in bit diameter was noted.

The resin used was a 1 minute resin from the same manufacturing date and lot (January 2002). Cartridges were made up on the day of the test, with a manufacturer's clip at the bottom of the cartridge and a tie wrap at the top. The tie wraps used were all of the same size. The speed of the bolting machine was determined to be 500 rpm, and the resin manufacturer's recommendation for 30 to 50 revolutions was followed by setting the spin time at 6 seconds, thus giving 50 revolutions for each bolt installation. Hold times were standardized at 54 seconds.

BRUCETON TEST RESULTS

Figure 6 shows a typical load deformation curve for a short encapsulation pull test in which the anchorage fails (and the rod does not yield). Initially the load deformation curve is linear. However, as the resin along the lower portion of the anchor begins to fail, the load deformation curve deviates from a straight line. As the applied load approaches and exceeds the peak anchor capacity, the anchor begins to slip. After the peak the anchor still carries on average about 70% of the peak load over 1.5-2.0 in of deformation.

Table 2 contains the results of the individual tests. In the "Hole Depth" column, "E" refers to holes drilled to the exact depth required to accommodate the bolt (taking into account the bolt plate and pull collar), while "O" refers to holes overdrilled 1-in deeper. The resin cartridge lengths were adjusted to account for the different hole volumes. "Hole Preparation" includes "R" for holes that were reamed with a 1 3/8 in bit up to the anchorage horizon, and "S" for standard holes.

Table 2. Bolt test data.

Test #	Bolt dia	Hole preparation	Hole depth	Max load, (tons)[1]	Disp at max load, (in)	Calculated Grip Factor (ton/in)
4	No. 6	R[2]	E[3]	8.90	0.381	0.74
6	No. 6	R	E	10.00	0.369	0.83
11	No. 6	R	E	10.30	0.137	0.86
13	No. 6	R	E	7.20	0.455	0.60
19	No. 6	R	E	12.70	0.359	1.06
22	No. 6	R	E	9.80	0.570	0.82
28	No. 6	R	E	8.70	0.293	0.73
30	No. 6	R	E	10.50	0.321	0.88
36	No. 6	R	E	8.00	0.420	0.74
37	No. 6	R	E	9.70	0.262	0.81
42	No. 6	R	O	7.40	0.436	0.62
49	No. 6	R	O	7.40	0.354	0.62
53	No. 6	R	O	6.50	0.263	0.54
59	No. 6	R	O	10.00	0.423	0.83
67	No. 6	R	O	6.10	0.269	0.51
73	No. 6	R	O	7.90	0.325	0.66
43	No. 6	S	E	5.90	0.440	0.49
52	No. 6	S	E	8.20	0.392	0.68
58	No. 6	S	E	7.90	0.285	0.66
63	No. 6	S	E	8.30	0.222	0.69
68	No. 6	S	E	9.30	0.294	0.78
71	No. 6	S	E	11.10	0.485	0.93
46	No. 6	S	O	9.60	0.417	0.80
48	No. 6	S	O	3.30	0.261	0.28
54	No. 6	S	O	7.40	0.336	0.62
60	No. 6	S	O	7.50	0.401	0.63
70	No. 6	S	O	9.40	0.294	0.78
72	No. 6	S	O	7.30	0.282	0.61
2	No. 5	R	E	7.70	0.570	0.64
5	No. 5	R	E	7.40	0.400	0.62
12	No. 5	R	E	7.00	0.431	0.58
16	No. 5	R	E	7.5	0.373	0.63
20	No. 5	R	E	10.5	0.438	0.88
24	No. 5	R	E	8.5	0.491	0.71
25	No. 5	R	E	8.3	0.332	0.69
32	No. 5	R	E	7.5	0.316	0.63
33	No. 5	R	E	7.0	0.363	0.58
38	No. 5	R	E	6.9	0.309	0.58
45	No. 5	R	O	7.8	0.464	0.65
47	No. 5	R	O	10.4	0.650	0.87
57	No. 5	R	O	4.7	0.242	0.39
61	No. 5	R	O	6.8	0.339	0.57
65	No. 5	R	O	8.7	0.540	0.73
74	No. 5	R	O	6.3	0.334	0.53
44	No. 5	S	E	9.9	0.461	0.83
50	No. 5	S	E	7.7	0.420	0.64
56	No. 5	S	E	10.5	0.393	0.88
62	No. 5	S	E	8.9	0.524	0.74
66	No. 5	S	E	8.8	0.296	0.73
76	No. 5	S	E	8.7	0.377	0.73
41	No. 5	S	O	8.7	0.452	0.73
51	No. 5	S	O	6.6	0.501	0.55
55	No. 5	S	O	10.4	0.397	0.87
64	No. 5	S	O	5.7	0.270	0.48
69	No. 5	S	O	10.6	0.540	0.88
75	No. 5	S	O	10.0	0.575	0.83

[1]Maximum loads rounded to nearest 0.1 ton.
[2]R=Hole reamed to bolting horizon, bolt pulled from roof. S=Standard drill hole.
[3]E=Hole drilled to exact depth to accommodate bolt length. O=Hole overdrilled by 1-in.
*Spin times 6 seconds for all bolts. Hold times 54 seconds for all bolts.
*All bolts 79.5 in long. All bolts installed using resin from the same lot.

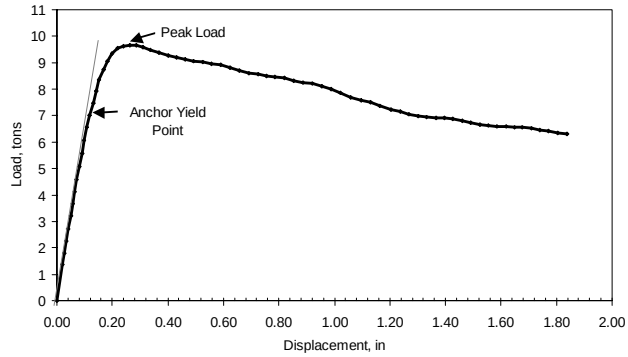

Figure 6. Load deformation curve for typical short encapsulation pull test.

The results of the tests are summarized in Table 3. The average Grip Factor for all the tests was 0.69 tons/in, which is well below the "Green" level of about 0.9 ton/in. This result confirms that low grip factors can be encountered when the rock is extremely weak, even under optimum installation conditions. In general, the results were reasonably consistent, with the standard deviation on average being about one-fifth of the mean.

Table 3. Average test results by group.

Bolt Size	Test Type	Hole Depth	Mean Maximum load (tons)	St. Dev., (tons)	Grip Factor (tons/in)
No. 6	R	E	9.7	1.4	0.81
No. 5	S	E	9.1	1.0	0.76
No. 5	S	O	8.7	2.1	0.73
No. 6	S	E	8.5	1.7	0.71
No. 5	R	E	7.8	1.1	0.65
No. 6	R	O	7.6	1.4	0.63
No. 5	R	O	7.5	2.0	0.62
No. 6	S	O	7.4	2.3	0.62

There was no statistically significant difference between the No. 5 and the No. 6 rebar in these tests, either in the mean Grip Factor or the standard deviation. Apparently, the difference in annulus did not affect these results.

Reaming the hole also had no statistically significant effect on the test result. The test procedure suggested in the appendix, therefore, allows either type of hole. Standard holes are more convenient, but reamed holes can be used if the additional information that can be obtained from visual inspection is desired.

The only statistically significant difference was between the exact depth and the overdrilled holes. Surprisingly, the exact depth holes achieved greater pullout loads, even though the visually inspected bolts showed that it was common for the top one-half to two inches of their resin to pull away from them. It seemed that the upper portion of the resin was weak due to the presence of the bag and resin clips. In contrast, the overdrilled holes generally appeared to have solid resin, with no residue from the bag or clips to the top of the bolt. However, since the effect was relatively small (about 10%), the Appendix suggests that overdrilled holes be used, but exact depth holes could also be used if that is the normal bolt installation practice at the mine.

As part of the tests, 32 of the anchors were recovered by pulling the bolts completely out of the reamed holes. Figure 7 shows a typical anchor that was pulled from the roof. Each anchor was examined for evidence of the length of the installed grout column while the length of the grout still attached to the rebar was measured. This confirmed that the specified grout length was achieved during the installation. Usually about a 7 to 10 in long solid length of anchor was still attached to the rebar after being pulled from the roof. About 2 to 4 in of the grout would break away from the lower portion of the anchor. This is the portion of the grout that failed during the pull test.

Figure 7. View of a short column grout anchor recovered from the roof.

PRELIMINARY TESTS IN U.S. COAL MINES

As part of this study, short encapsulation pull tests were conducted in two U.S. coal mines, one in West Virginia and one in Pennsylvania. The goal was to determine how widespread the problem of poor anchorage might be, and the mines were selected because they were encountering extremely weak roof conditions.

The tests were conducted early in the study, and the procedures differed in some respects from the final ones contained in the Appendix. So while the results are not strictly comparable, they do provide some indication of the anchorage that can be encountered. The tests involved a variety of No. 5 and No. 6 rebar types.

Table 4 shows that the anchorage was "green" at 2 of the 5 sites, and borderline at a third. At the other two the grip factor was still greater than 0.6 tons/in.

IMPROVING THE PERFORMANCE OF FULLY GROUTED BOLTS

Once short encapsulation tests have confirmed that the anchorage is poor, there are some things that can be done. The first step is to *check the quality of the installation*. It is essential that roof bolt operators carefully follow the installation instructions provided by the resin manufacturer. The TGRSS program contains some simple suggestions for testing the resin and the hole.

If the grout and the installation procedure are found to be adequate, then attention should shift to the hole and the bolt. Because resin grout acts by mechanical interlock, not by adhesion, *rifled holes and rougher bolt profiles* result in better anchorage (11, 21, 22). Unfortunately, special bits to drill rifled holes are easier to find overseas than they are in the U.S.

Another possibility is to *reduce the hole annulus*. Numerous tests over the years have found that optimum difference between the diameter of the bolt and the diameter of the hole is no greater than 0.25 in, giving an annulus of about 0.125 in (11, 23, 24). For example, a 0.125-in annulus is obtained by a 3/4 in bolt in a 1-in hole. The current U.S. trend to replace No.6 rebar with No.5, while leaving the hole diameter at 1 in, results in slightly larger 0.188 in annulus.

Larger holes can result in poor resin mixing and a greater likelihood of finger-gloving, with adverse effects on anchorage. Studies in the U.S. and Australia have found that the anchorage improved by more than 50% when the annulus was reduced from 0.35 to 0.1 in (24, 25). Smaller holes, on the other hand, can cause insertion problems and magnify the effects of resin losses in oversized holes (26). However, one recent U.S. study found that annuluses ranging from 0.1-0.25 in all provided acceptable results in strong rock (27), and the tests described in this paper at the SRCM found no difference between the anchorage obtained by No. 5 and No. 6 rebar. Ulrich et al. (24) found no significant difference in the mean anchorage strength between annuluses of 0.125 and 0.25 in, but the standard deviation was much higher for the larger annulus.

In very severe conditions, the only way to increase anchorage may be to *increase both the hole diameter and the bar diameter*. This enlarges the area of the grout-rock contact surface, thereby increasing the total shear resistance (11, 16).

Table 4. Results from Underground Coal Mines.

State	Rock Type	Grip Factor (tons/inch)	Green/Yellow
Pennsylvania site 1 @ 6 ft	clay, claystone	0.87	Green
Pennsylvania site 1 @ 8 ft	layered dark. gray shale	0.72	Yellow
Pennsylvania site 2 @ 6 ft	dark gray fireclay	0.63	Yellow
West Virginia @ 6 ft	dark gray shale	1.04	Green
West Virginia @ 1.5 ft	thinly banded gray shale	0.83	Borderline

CONCLUSIONS

Since its introduction more than 30 yrs ago, resin grouting has dramatically improved the effectiveness of roof bolting. One important advantage of fully grouted resin bolts over conventional mechanical ones is that resin anchorage generally does not degrade over time. Another is that resin bolts usually out perform mechanical anchor bolts in difficult ground.

On the other hand, despite years of research, no practical and reliable method to routinely test resin bolt installations has ever been developed. It is very difficult to know whether resin bolts are performing as well as they could be–whether a mine is truly getting its money's worth in support and safety.

This paper has focused on the specific problem of poor anchorage. When anchorage is poor, roof movements near the top of the bolt (within the anchorage zone) can pull the bolt out of the upper portion of the hole at loads less than the yield strength of the rod. The two most likely causes of poor anchorage are weak rock and poor installation quality.

The short encapsulation pull test (SEPT) is a relatively simple technique to test resin bolt anchorage. Step-by-step procedures for conducting SEPT are described. It is hoped that more widespread use of the SEPT will aid quality control, improve the effectiveness of resin bolts, and result in enhanced safety for U.S. mineworkers.

REFERENCES

1. Campoli, A.A. Variables Affecting Resin Anchorage Performance in United States Roof Bolting Systems. Proceedings, Roofbolting in Mining, RWTH Aachen, Germany, 2001, pp. 19-28.

2. Dolinar, D.R. and Bhatt, S.K. Trends in Roof Bolt Application. Proceedings, New Technology for Coal Mine Roof Support. (NIOSH) Publication No. 2000-151, IC 9453, 2000, pp. 43-52.

3. Mark, C. Analysis of Roof Bolt Systems. Proceedings, 20th International Conference on Ground Control in Mining. Morgantown, WV, West Virginia University, 2001, pp. 218-225.

4. Mazzoni, R.A., Karabin, G.J. and Cybulski, J.A. A trouble-shooting Guide for Roof Support Systems. MSHA IR 1237, 1996, 101 pp.

5. Mark, C., Dolinar, D.R. and Mucho, T.P. Summary of Field Measurements of Roof Bolt Performance. Proceedings, New Technology for Coal Mine Roof Support, NIOSH Publication No. 2000-151, IC 9453, 2000, pp. 81-98.

6. Signer, S.P. Load Behavior of Grouted Bolts in Sedimentary Rock. Proceedings, New Technology for Coal Mine Roof Support. NIOSH Publication No. 2000-151, IC 9453,2000, pp. 73-80.

7. Mark, C. Design of Roof Bolt Systems. Proceedings, New Technology for Coal Mine Roof Support, NIOSH Publication No. 2000-151, IC 9453, pp. 111-131.

8. Serbousek, M.O. and Signer, S.P. Linear Load-transfer Mechanics of Fully Grouted Roof Bolts. USBM RI 9135, 1987, 17 pp.

9. Franklin, J.A. and Woodfield, P.R. Comparison of a Polyester Resin and a Mechanical Rockbolt Anchor. Trans Inst Min Metall (Section A: Mining Industry), 1971, pp. A91-100.

10. Health and Safety Executive. Guidance on the Use of Rockbolts to Support Roadways in Coal Mines. U.K., Health and Safety Executive, Deep Mines Coal Industry Advisory Committee, 1996, 16 pp..

11. Karabin, G.J .and Debevec, W.L. Comparative Evaluation of Conventional and Resin Bolting Systems. MESA IR 1033, 1976, 22 pp.

12. Signer SP. Field Verification of Load Transfer Mechanics of Fully Grouted Roof Bolts. USBM RI 9301, 1990, 13 pp.

13. Tadolini, S.C. and Dyni, R.C. Transfer Mechanics of Full-Column Resin-Grouted Roof Bolts. USBM RI 9336, 1991, 14 pp.

14. Yearby, M. Practical Guide to Rock Bolting. ANI Arnall, Newcastle, New South Wales, Australia, 1991, 24 pp.

15. Peng, S.S. Roof Bolting Adds Stability to Weak Strata. *Coal Age Magazine*, 1998, *Dec*:32-38.

16. Rico, G.H., Orea, R.R., Mendoza, R.L. and Tadolini, S.C. Implementation and Evaluation of Roof Bolting in MICARE Mine II. Proceedings, 16th International Conference on Ground Control in Mining, Morgantown, WV, West Virginia University, 1997, pp. 139-148.

17. Cincilla, W.A. Determination of Effective Column Lengths for Resin-grouted Roof Bolts. Proceedings, 5th International Conference on Ground Control in Mining, Morgantown, WV, West Virginia University, 1986, pp. 6-14.

18. Pettibone, H.C. Avoiding Anchorage Problems with Resin-Grouted Roof Bolts. USBM RI 9129, 1987, 28 pp.

19. Fabjanczyk, M., Hurt, K. and Hindmarsh, D. Optimization of Roof Bolt Performance. Proceedings, International Conference on Geomechanics/Ground Control in Mining and Underground Construction, Wollongong, NSW, 1998, pp. 413-422.

20. Wittenberg, D. and Ruppel, U. Quality Management for Grouted Rockbolts. Proceedings, 19th International Conference on Ground Control in Mining, Morgantown, WV, West Virginia University, 2000, pp. 249-254.

21. Aziz, N., Indraratna, B., Dey, A. and Wang, Y. Laboratory Study of Shear Loading and Bolt Load Transfer Mechanisms under Constant Normal Stiffness Conditions. Proceedings, 18th International Conference on Ground Control in Mining, Morgantown, WV, West Virginia University, 1999, pp. 239-247.

22. Haas, C.J. Analysis of Rockbolting to Prevent Shear Movement in Fractured Ground. *Mining Engineering*, 1981, *Jun*:691-704.

23. Fairhurst, C. and Singh, B. Roof Bolting in Horizontally Laminated Rock. Eng Min J, 1974, *Feb*:80-90.

24. Ulrich, B.F., Wuest, J. and Stateham, R.M. Relationships Between Annulus Thickness and the Integrity of Resin Grouted Bolts. USBM RI 9253, 1989, 13 pp.

25. Fabjanczyk, M.W. and Tarrant, G.C. Load Transfer Mechanisms in Reinforcing Tendons. Proceedings, 11th International Conference on Ground Control in Mining, Wollongong, New South Wales, Australia, University of Wollongong, 1992, pp. 212-219.

26. Campoli, A.A., Mills, P.A., Todd, P. and Dever, K. Resin Annulus Size Effects on Rebar Bolt Pull Strength and Resin Loss to Fractured Rock. Proceedings, 18th International Conference on Ground Control in Mining, Morgantown, WV, West Virginia University, 1999, pp. 222-231.

27. Tadolini, S. The Effects of Reduced Annulus in Roof Bolting Performance. Proceedings, 17th International Conference on Ground Control in Mining. Morgantown, WV, West Virginia University, 1998, pp. 230-236.

APPENDIX: SHORT ENCAPSULATION PULL TEST PROCEDURES

Performing a short encapsulation pull test is basically the same as a standard pull test. The main difference is that the resin-rock anchorage of a specific horizon in the roof is being tested instead of overall bolt performance. The equipment needed is the standard pull gear (fig. A1), plastic tie wraps, and a resin keeper (an O-ring). The resin column may also be pulled out of the roof for examination. This requires items listed in fig. A2 and some additional time.

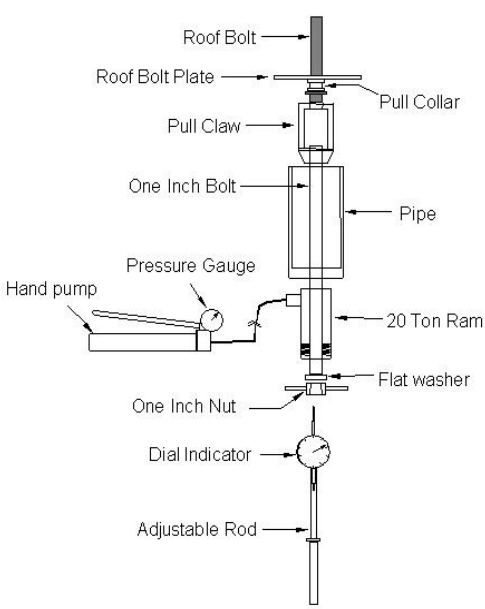

Figure A1. Exploded drawing of pull test apparatus.

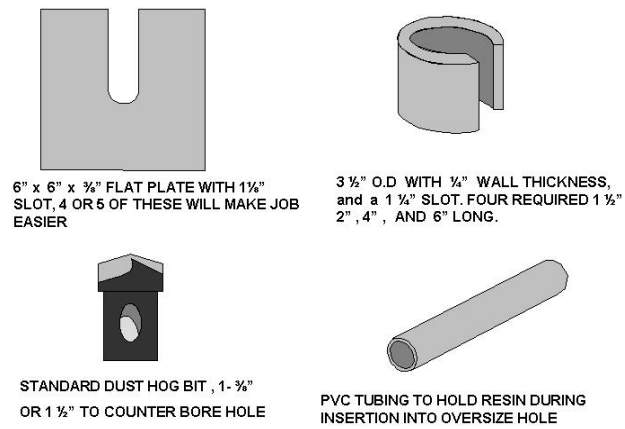

Figure A2. Additional material needed to ream hole and completely remove roof bolt.

Step-by-step procedures follow:

Prepare the Resin Cartridge

1. Calculate the one-ft resin tube equivalent length, which for a 1-in over drilled hole is:

$$Tube\ length\ \ (inches) = \frac{(13\ Hole\ D^2 - (12\ Bolt\ D^2)}{Tube\ D^2}$$

where D = Diameter in inches.

2. Measure and attach a tie wrap around the resin cartridge at the calculated length (fig. A3). Add 1/8" to the calculated length before tightening the tie wrap to allow for compression of the resin cartridge. Cut away the excess tie wrap and resin.

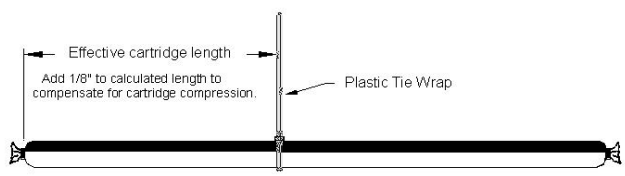

Figure A3. Preparation of the resin cartridge.

Select Test Horizon and Prepare the Bolt

3. Determine the roof horizon where test is to be performed. The bolt may be cut to test any area within bolted horizon. The bolt length should be adjusted to compensate for the pull collar and roof bolt plate.

4. Attach the resin keeper to the bolt one foot from the top end.

Drill the hole

5. Measure the hole length by assembling the bolt, pull collar, and flat roof bolt plate. The depth of the test hole is the distance from the plate to end of the roof bolt, plus one inch (fig. A4).

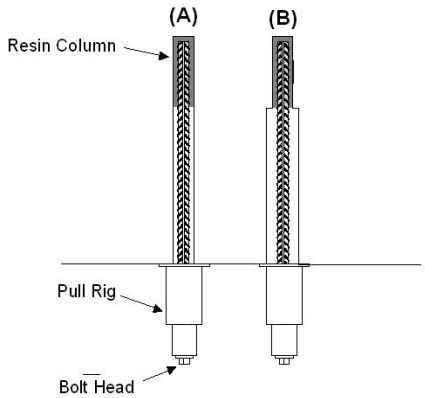

Figure A4. The Short Encapsulation Pull Test. (A) Normal hole; (B) Reamed hole.

6. Use a new bit to drill the first hole, and measure periodically to ensure that there has not been excessive wear.

7. *(If a reamed hole is not desired then skip to step #8.)* Counter-bore the hole with a 1-3/8- to 1-1/2-in bit to within thirteen in of distance measured above. It is important not to go too deep with the counter-bore because it will compromise the effective length of resin column. A suggestion for keeping the resin in place while inserting a bolt through the oversized hole is shown in fig. A5.

Insert the bolt

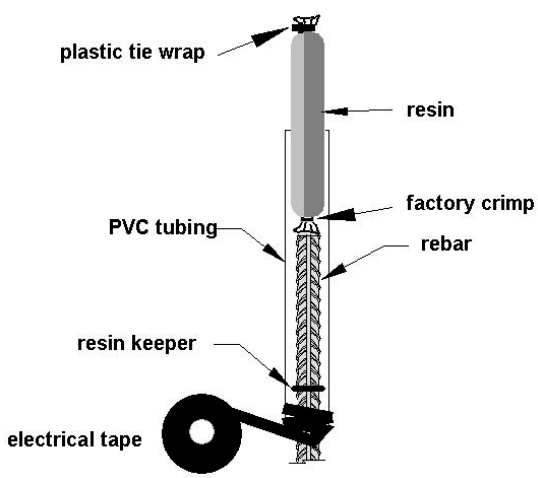

Figure A5. Using a short length of PVC tubing to insert the resin cartridge into the top of a reamed hole.

8. Insert the resin with the plastic tie wrap pointing up toward top of hole (The factory crimped end of resin cartridge will be touching the bolt).

9. Push the bolt up until plate just touches roof, spin for the resin manufacturer's recommended time and push the bolt against the roof. Hold for the recommended time.

10. Allow at least one hour, but no more than 30 hours, before pulling the bolt.

Conduct pull test

11. Assemble and attach the pull gear as shown in fig. A1 (except for the dial indicator and adjustable rod). Make sure the claw is well seated on the pull collar and tighten the nut as much as possible by hand. Load the ram with the hand pump to 1,000 lbs.

12. Add the dial indicator with adjustable rod in line with the bolt axis so that as the bolt is pulled it will push directly down on dial indicator. Adjust the dial on the indicator face to zero.

13. Begin loading the ram in 1,000-lb increments. Record load from the gauge on the pump and deformation from the indicator. Repeat this process until the bolt has reached its peak load. Then continue pumping and recording the load for each subsequent 0.05 in of displacement (as measured on the dial indicator) for an additional 0.25 in (or up to full extension of the ram). If it is clear before then that the rod has yielded (as defined in step 15 below) the test may be ended early.

14. To pull the bolt completely out of a reamed hole, remove the dial indicator and adjustable rod and continue to pump the ram until full extension is reached. Release pressure from the ram and allow the piston to return completely. Insert slotted plates and or slotted tubes to take up the space created from ram extension. Do not tighten the nut to take up this space or the claw may bottom out against bottom of pull tube. Continue this process until you have pulled the resin column into the counter bored portion of the test hole. The entire assembly, including the bolt, must be supported in some way or it will drop to the floor when the resin column is pulled into counter bored portion of the test hole.

Data Analysis

15. If the bolt yielded, then the result of the test is "Green," meaning that the anchorage is adequate. Bolt yield is indicated when: (a) The peak load was greater than the minimum yield strength of the rod (generally 9 tons for No. 5-Gr. 60 and No. 6-Gr. 40 bolts, and (b) The bolt continued to deform, but the load remained constant or increased very slowly (but did not decrease) with additional pumping.

16. If the bolt did not yield, then the result is "Yellow," meaning that the anchorage could be improved. The Grip Factor (tons per in) should be calculated as:

$$\text{Grip Factor} = \text{Maximum Load}/12.$$