AN ANALYSIS OF FIBER-REINFORCED ROUND PANEL STRENGTHS AND COMPARISON TO WIRE MESH BAG STRENGTH

L. Martin, NIOSH, Spokane, WA
B. Seymour, NIOSH, Spokane, WA
C. Clark, NIOSH, Spokane, WA
M. Stepan, NIOSH, Spokane, WA
R. Pakalnis, Univ. of British Columbia, Vancouver, BC, Canada
M. Roworth, Univ. of British Columbia, Vancouver, BC, Canada
C. Caceres, Univ. of British Columbia, Vancouver, BC, Canada

ABSTRACT

Researchers at National Institute for Occupational Safety and Health (NIOSH) are investigating how fiber-reinforced shotcrete mix designs can be extrapolated from proven designs employing wire mesh. This paper explains the results of round determinate panel tests and relates the flexural strength and toughness of fiber-reinforced shotcrete to known energy absorbing properties of wire mesh. The energy absorbed with central deflection is strongly influenced by the amount of fibres. The higher the energy absorption the more load cracked shotcrete can support. Two types of fiber-reinforced shotcrete were investigated, one with steel fiber and another with polyfiber. The residual load supported in Round Determinate Panel Tests can be matched with the strength of wire mesh, thus providing equivalent bag strength values for fiber reinforced shotcrete panels. There is also evidence of a panel crack width comparison to the load holding capabilities of the f ber in the shotcrete mixes. In practice, this provides designers with a method for comparing the ground support provided by fiber-reinforced shotcrete with that supplied by wire mesh.

INTRODUCTION

Underground mines in Nevada, as well as other parts of the northwestern United States, often have weak, raveling ground (RMR<44). A typical drift in these mines usually has a span of less than 4 m (13 ft) and a service life of less than one month (Pakalnis, 2002). In these ground conditions, the surface or skin of the underground openings must be continually supported in order to adequately protect underground workers. One traditional solution has been to use wire mesh to support loose broken material between the rock bolts which provide the primary ground support. The mesh serves to maintain the integrity of the opening's surface by generally holding loose rock in position.

In ground support conditions where wire mesh is not suitable alone f ber-reinforced shotcrete (FRS) is used in addition. When FRS is used for surface support, a shotcrete mix having the necessary strength properties must be specified. This typically defines the type and the density of the fibers that are used in the mix. One of the critical safety issues involved with using FRS instead of mesh is insuring that the level of ground support provided is safe. The (NIOSH) is conducting shotcrete-related research to specifically address this concern.

In underground mines, shotcrete is typically used in conjunction with other ground support components. Although it primarily functions to prevent fragments of ground from falling out between bolts or other structural support members, shotcrete can be used to support several different types of loads in a variety of ground conditions as shown in Figures 1-3. Regardless of whether the roof load is uniformly distributed or concentrated, the loosened material still must be held within a "bag" formed by the deformed or partially failed (cracked) shotcrete. Consequently, the residual strength of the shotcrete is an important design consideration, in addition to its flexural strength.

For the flexural resistance model illustrated in Figure 1, the relevant ground support design parameters include the thickness, flexural strength, and residual strength of the FRS; the span between the rock bolts; and the size and mass of the concentrated rock load at the mid-span distance between the bolts.

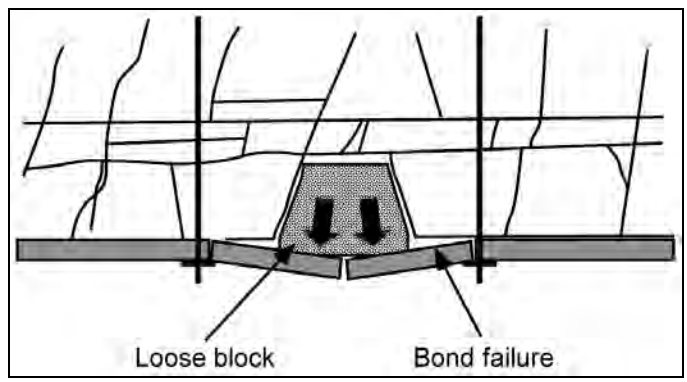

Figure 1. Flexural resistance model for a loosened block representing a concentrated load (Diamantidis & Bernard, 2004).

A different flexural resistance model, representing a shotcrete lining that supports more highly fractured ground, is illustrated in Figure 2. This uniformly distributed load is more representative of the weak rock mass loading conditions in the underground mines in Nevada.

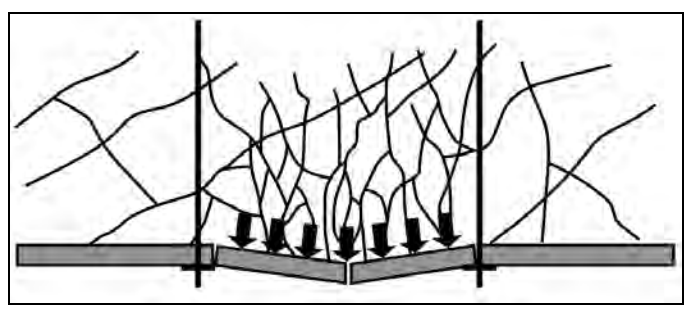

Figure 2. Flexural resistance model for a loosened block representing a distributed load. (Diamantidis & Bernard, 2004).

Shear failure may occur if the span over which the bending stresses act is small compared to the magnitude of the shear force (Fig. 3). In this case, the weight of the block mass is held by the shear strength of the shotcrete lining around the block perimeter. This failure mode is more common in hard, jointed rock.

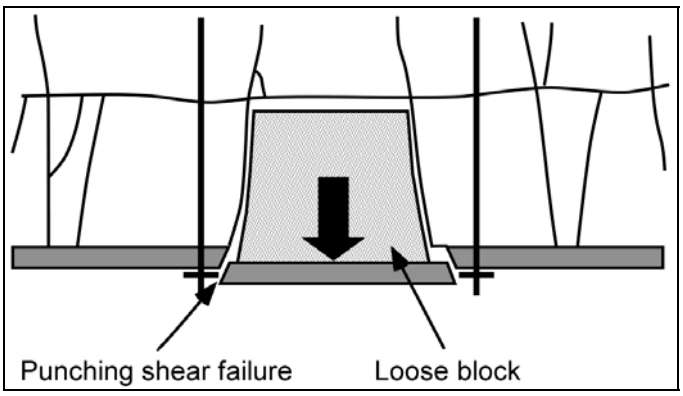

Figure 3. Shear resistance model for a loosened block acting as a rigid body (after Diamantidis & Bernard, 2004).

The highly fractured ground conditions shown in Figure 2 are encountered in many underground mines in the western United States, particularly in Nevada. A set of support guidelines has been developed to address these failure conditions based on FRS strength properties (Papworth, 2002; Grant et al., 2001; Barton et al., 1974). Generally, the shotcrete residual strength is specified by the type, gauge (diameter), and density of the fibers used in the mix.

BACKGROUND

The flexural strength of the fiber-reinforced shotcrete is one of the key physical property parameters for ground support design in weak rock mass mines. The shotcrete between the bolts acts as a thin shell that is loaded by the dead weight of the loose rock in the mine roof. As the ground starts to unravel, the load builds up on the shotcrete shell between the bolts. The shotcrete in turn provides a resistive force until the weight of the loose rock exceeds the tensile strength of the shotcrete and breaks the shotcrete shell in flexure. This is known as the first break or first crack strength (Fig. 4). This first break flexural strength is directly related to the shotcrete's tensile strength and is a primarily influenced by the Portland cement content of the shotcrete mix.

Figure 4. Broken sample showing tension crack.

A theoretical method of determining the first break load was developed by (Johnansen, 1972) for shotcrete used in tunneling and mining. This method known as the "yield line theory" is listed in Equation 1 and shown in Figure 5. Although the first break load can be determined using Equation 1, the calculated load is usually 13 pct less than the actual breaking load. Because the shotcrete generally does not break in perfect 1/3 sections, this error is thought to be due to the geometry of the crack formations or breaks. If the tensile strength of the shotcrete is known from standard laboratory splitting tensile tests, this value can be entered in Equation 1 to accurately estimate the first break load of the shotcrete for design purposes.

$$P_{crack} = 3\sqrt{3m}\,\frac{R}{r} \qquad (1)$$

where P_{crack} = first crack load
R = round panel radius
r = reactant radius
and m = moment/unit length,

and where $m = \dfrac{\sigma b d^2}{6}$
σ = tensile strength
b = R
and d = thickness of panel

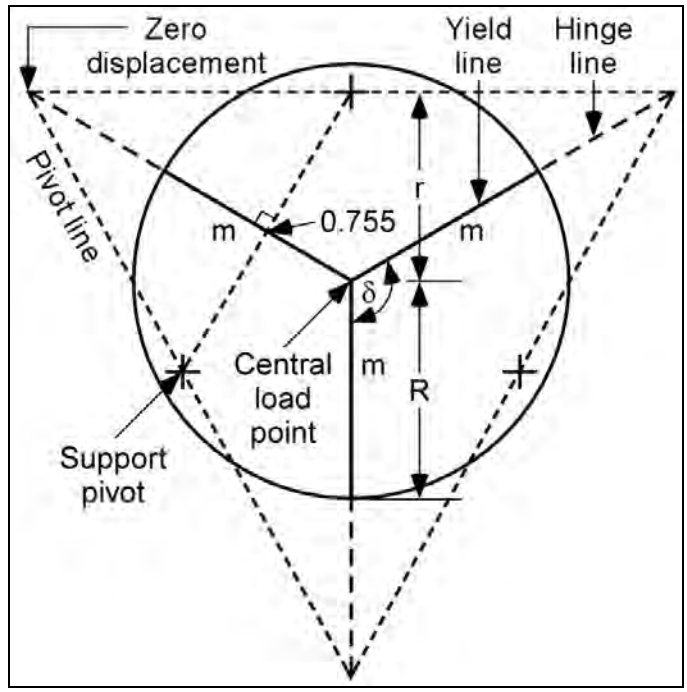

Figure 5. Yield line theory diagram.

The use of the yield line theory is not a practical approach to determining the post peak strength of shotcrete containing fibers. The equation only determines first break flexural load and not residual strength of the shotcrete after this initial failure. Shotcrete residual strength is an important consideration when loose broken material in the mine roof is supported in a bag of partially failed or cracked shotcrete. The primary reason that fibers are used in a shotcrete mix is to improve the residual strength or toughness of the shotcrete.

A shotcrete testing standard, ASTM 1550-05 Round Determinate Panel Test (RDPT), was designed to replicate the typical shotcrete loading conditions in a mine or tunnel. This test provides design engineers with a peak flexural load at first break and also a measure of the residual strength or toughness of the fiber-reinforced shotcrete as the shotcrete undergoes further displacement after this initial failure. The first break of the shotcrete occurs early in the test, usually within the first minute of a ten minute test. Although originally developed for tunneling applications (Bernard & Pireher, 2000), this test provides a convenient standard for comparing shotcrete mixes having different mix constituents including different types and densities of embedded fiber.

Although round panel tests provide useful information, these tests are conducted in only a few laboratories throughout the world. Consequently, the shotcrete panels usually have to be shipped after

being formed, causing logistical as well as testing problems, particularly for mines that are located distant from urban areas. As a result, very little field data is available regarding either the flexural strength or the residual strengths of FRS, especially for underground mining applications.

EXPERIMENTAL INVESTIGATION

To provide flexural and residual strength values, NIOSH researchers developed a portable round panel test machine that could be transported and set up directly at the mine site (Fig. 6). The usefulness of this field-ready test machine has been previously demonstrated during a fiber dosage comparison study conducted at the Chief Joseph Mine in Butte, Montana (Martin et al., 2007).

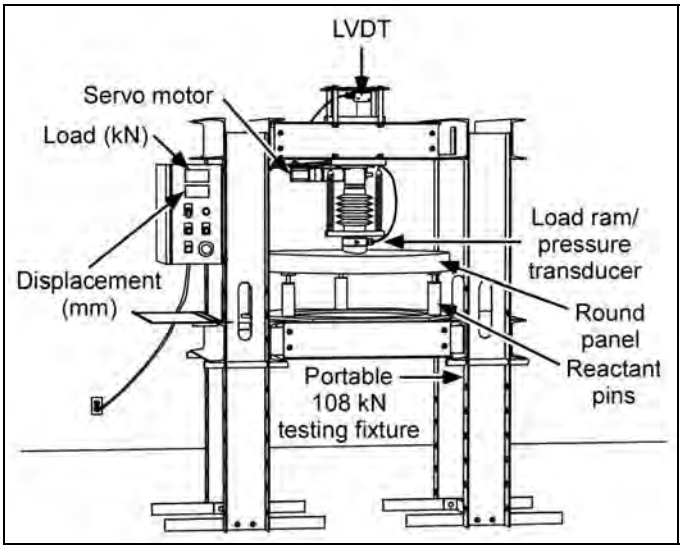

Figure 6. RDPT test system schematic.

The round panel test illustrated in Figures 4 and 6 approximates the loading conditions shown in Figure 2 via the support pivot points indicated in Figure 5. A centrally- placed ram loads the shotcrete panel at a rate of 4 mm per minute while the three "determinate" pins deliver a reactive force through the three pivot points. During this test, three independent cracks, bridged by fibers in the shotcrete, are formed between the three pivot points and the center of the specimen (Fig. 4). Increasing the f ber dosage, (the weight of fibers per cubic meter of shotcrete), up to saturation, increases the residual strength or toughness in the shotcrete panels.

In conducting these round panel tests, shotcrete specimens are prepared and cured in an environmental chamber in a manner consistent with ACI recommendations and then tested at 7, 14, and 28 days as prescribed in ASTM 1550-05. A typical load versus displacement profile that is developed during the test is shown in Figure 7. The first break failure generally occurs within a few mm of displacement, and afterwards a large percentage of the load is lost. Residual strength is provided by the f bers in the shotcrete mix and is shown by the colored area under the curve, referred to as the energy or toughness of the shotcrete. The fibers typically break or are pulled out of the shotcrete matrix as the test progresses.

Many of the mines that are operating in weak ground conditions are starting to use FRS in conjunction with wire mesh. When the shotcrete is used in conjunction with bolts, the design capabilities of this integrated ground support system are not well known. By providing load versus displacement profiles for the shotcrete, round panel tests can supply specific strength and physical behavior attr butes for the shotcrete that are not typically known. These strength properties can then be used in mine design equations to develop safer ground control plans. By determining the residual load at specific displacement intervals, the residual strength of the shotcrete can be compared with the bag strength or support capacity of wire mesh. In addition, it may also be possible to relate the width or dilation of the crack formed on the bottom of the round panel specimen during the test to the residual load that the cracked shotcrete specimen is still able to support. If this crack dilation can be related to the residual strength of the shotcrete, this information may provide a practical means for underground miners to assess the stability of shotcrete applied to the surfaces of underground openings.

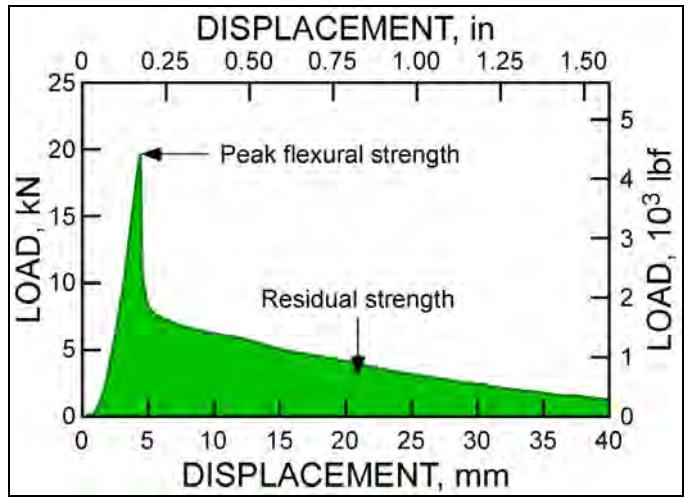

Figure 7. RDPT Load vs. displacement graph indicating peak flexural strength and residual strength.

To determine if crack dilation could be quantitatively related to residual load, NIOSH researchers have conducted a series of round panel tests using two commercial shotcrete mixes containing either steel fibers (Superstick steel fiber shotcrete, SCA-PT100) or poly f bers (Superstick poly fiber shotcrete, SCAPF). Unconfined compression and splitting tensile tests were also conducted with these shotcrete mixes to determine the compressive and tensile strength properties for representative samples of the applied shotcrete. Compressive strength results are listed below in Table 1 for these two shotcrete mixes. Splitting tensile strengths were generally about 12 pct of the measured compressive strength values. The tensile strength values are input into the yield line Equation 1 for determining the first break strength.

Table 1 Compressive strengths of shotcrete.

SCAPT-100
7-day compressive strength = 11 MPa (1,616 psi)
14-day compressive strength = 13 MPa (1,858 psi)
28-day compressive strength = 16 MPa (2,294 psi)
SCAPF
7-day compressive strength = 10 MPa (1,450 psi)
14-day compressive strength = 12 MPa (1,740 psi)
28-day compressive strength = 17 MPa (2,465 psi)

Results of these round panel tests are listed in Tables 2-7 and shown graphically in Figures 9 and 10. The peak flexural load at the first break of the round panel specimen was recorded along with the displacement of the loading ram as the crack progressed through the entire thickness of the shotcrete panel (i.e., crack-through). Furthermore, the residual load was noted at 10, 20, 30, and 40 mm of displacement of the loading ram, and the dilation or width of the crack propagated on the underside of the round panel specimen was also measured and recorded for these respective displacements at the center, mid diameter, and outer diameter of the specimen (Figure 8 - A, B, & C, respectively). Round panel tests were conducted with three specimens for each of the mixes after the shotcrete had cured for 7, 14, and 28 days. Therefore, the load, displacement, and dilation values listed in Tables 2-7 are average results obtained from a series of three round panel tests conducted with a specific shotcrete mix after the specimens had cured for the time indicated.

As expected, the first break or peak load increased with shotcrete curing time. However, the type of fiber, steel or poly, did not appear to significantly affect this peak load value, even though the poly fiber specimens did have a slightly larger average peak load as compared to the steel fiber specimens, particularly after 28 days of curing. For the steel fiber shotcrete, the load at crack-through remained close with curing time, but the displacement at crack-through increased with shotcrete curing time from 20 mm after 7 days of curing to 28 mm after 28 days of curing. As the shotcrete cured, it was able to withstand more displacement under load than at earlier curing times. This may indicate that the steel fibers become more interlocked in the shotcrete matrix as the shotcrete ages. In contrast, the displacement at crack-through for the poly fiber specimens remained close regardless of curing time, but the load at crack-through increased slightly with an increase in shotcrete curing time. For the dilation or crack width measurements, the steel fiber shotcrete as a general rule supported higher loads with less crack dilation than the poly fiber shotcrete at a given measure of ram displacement (10-40 mm).

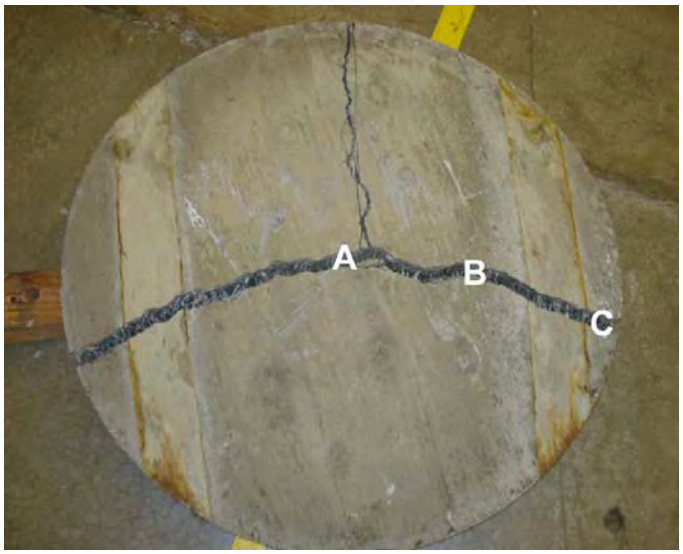

Figure 8. Measurement points of the round panel.

Load versus displacement profiles for the round panel tests with steel fiber shotcrete are plotted in Figure 9, and similar profiles for the poly fiber shotcrete are plotted in Figure 10. The steel fiber shotcrete appeared to provide more uniform RDPT results with a noticeable increase in peak flexural load with curing time and a relatively constant residual strength regardless of curing time. In contrast, the RDPT results for the poly fiber shotcrete were not as consistent. While the peak flexural load generally increased with curing time, the residual strength or toughness of the shotcrete varied dramatically depending on the curing age of the shotcrete. As the poly fiber shotcrete cured, it appears to have become more brittle. Consequently, the residual load that the shotcrete was able to support decreased markedly with an increase in curing time for a given displacement beyond the first break failure. These test results clearly indicate that the type of fiber governs to a large extent the residual strength and energy absorption capability (area under the load displacement curve) of FRS.

The difference in these two sets of curves also demonstrates quality control issues associated with different types of shotcrete mixes. Inconsistencies in the RDPT results for the poly fiber shotcrete are at least in part caused by a higher percentage of rebound and a greater variability in fiber count for the applied poly fiber shotcrete versus the applied steel fiber shotcrete.

As shown in Figures 9 and 10 and also Tables 2-7, round panel tests can provide important information for determining the available ground support capacity of the in-place shotcrete and also indicate whether or not rehabilitation of the shotcrete is needed.

GROUND SUPPORT LOAD CALCULATIONS

Determining the in-situ load shotcrete is supporting in underground mines is difficult because the load exerted on the shotcrete by loose material near the surface of the mine opening is often hidden from observation. In contrast, the loads applied to wire mesh are easier to assess because the wire mesh tends to bag as it retains more loose material. The RDPT test provides a method for simulating a load on the shotcrete so strength values can be determined. These strength values can be compared against estimated loads determined through dead weight load calculations. Although these calculations are conservative, they provide an established method for estimating the maximum expected load on the shotcrete.

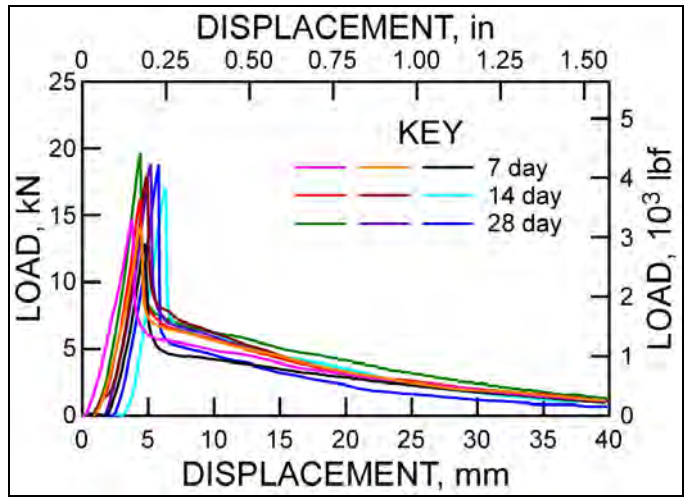

Figure 9. Load versus displacement graphs for SCAPT-100.

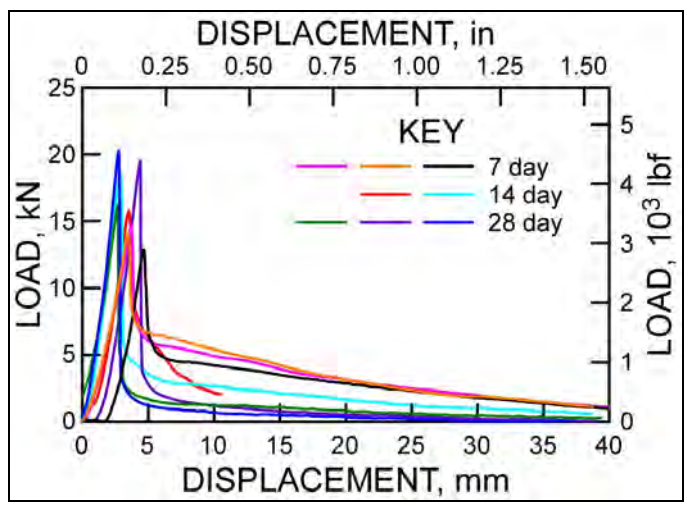

Figure 10. Load versus displacement graphs for SCAPF.

Because the shotcrete primarily provides surface support for loose material between the bolts, the geometry of the bolt spacing can be used to determine the maximum volume of loose material that will load the shotcrete. Two methods are commonly used to predict the maximum volume of loose material that would be reasonably expected to load the shotcrete. As shown in Figure 11, a block method can be used to calculate the volume of the largest block of ground that would fall between the bolts. Equation 2 can then be used to calculate the block's dead weight load.

$$Wt_b \text{ (block 1-m slice)} = b^2 * h * \gamma \qquad (2)$$

where Wt_b = Dead weight block
b = base length,
h = height,

γ = specific weight = 2.7 t/m^3

Wt_b = (1.2 m)^2*1.0 m* 2.7 t/m^3 = 1.2 tonnes

Round Panel Tests with Steel Fiber Shotcrete

Table 2 — Seven-day RDPT results for steel fiber shotcrete

MIX-SCA-Pt100 7-day test 3 sample average	Load, kN			
First break	14.06			
Crack through	3.38 at 20 mm			
Round panel dilation in millimeters measured at:				
Ram travel	Load, kN	Center	Mid diameter 400 mm	Outer diameter 800 mm
10 mm	4.99	2.43	2.42	2.35
20 mm	3.34	6.67	6.05	4.70
30 mm	2.05	11.98	10.37	7.41
40 mm	1.24	16.97	14.90	10.15

Table 3 — 14-day RDPT results for steel fiber shotcrete

MIX-SCA-Pt100 14-day test 3 sample average	Load, kN			
First break	17.34			
Crack through	3.84 at 25 mm			
Round panel dilation in millimeters measured at:				
Ram travel	Load, kN	Center	Mid diameter 400 mm	Outer diameter 800 mm
10 mm	5.44	2.12	2.17	1.92
20 mm	3.46	5.68	5.75	4.45
30 mm	2.06	10.25	10.30	6.82
40 mm	1.19	16.31	13.74	9.73

Table 4 — 28-day RDPT results for steel fiber shotcrete

MIX-SCA-Pt100 28-day test 3 sample average	Load, kN			
First break	18.93			
Crack through	2.28 at 28 mm			
Round panel dilation in millimeters measured at:				
Ram travel	Load, kN	Center	Mid diameter 400 mm	Outer diameter 800 mm
10 mm	5.68	2.34	2.28	1.81
20 mm	3.48	6.68	6.23	4.57
30 mm	2.03	12.07	9.66	7.28
40 mm	1.19	16.03	13.73	11.16

Round Panel Tests with Poly Fiber Shotcrete

Table 5 — Seven-day RDPT results for poly fiber shotcrete

MIX-SCA-PF 7-day test 3 sample average	Load, kN			
First break	14.61			
Crack through	1.28 at 12 mm			
Round panel dilation in millimeters measured at:				
Ram travel	Load, kN	Center	Mid diameter 400 mm	Outer diameter 800 mm
10 mm	1.39	2.60	2.80	2.02
20 mm	1.02	6.13	6.42	5.17
30 mm	0.72	14.11	10.95	7.88
40 mm	0.42	19.00	14.98	10.19

Table 6 — 14-day RDPT results for poly fiber shotcrete

MIX-SCA-PF 14-day test 3 sample average	Load, kN			
First break	17.78			
Crack through	1.40 at 11 mm			
Round panel dilation in millimeters measured at:				
Ram travel	Load, kN	Center	Mid diameter 400 mm	Outer diameter 800 mm
10 mm	1.78	3.53	3.23	2.72
20 mm	1.17	6.58	7.38	5.70
30 mm	0.69	13.82	11.46	8.51
40 mm	0.42	19.73	15.57	12.44

Table 7 — 28-day RDPT results for poly fiber shotcrete

MIX-SCA-PF 28-day test 3 sample average	Load, kN			
First break	20.82			
Crack through	3.04 at 8.2 mm			
Round panel dilation in millimeters measured at:				
Ram travel	Load, kN	Center	Mid diameter 400 mm	Outer diameter 800 mm
10 mm	2.82	3.62	3.27	2.53
20 mm	1.89	10.27	7.95	6.15
30 mm	1.13	16.60	9.56	10.10
40 mm	0.71	23.80	18.23	14.13

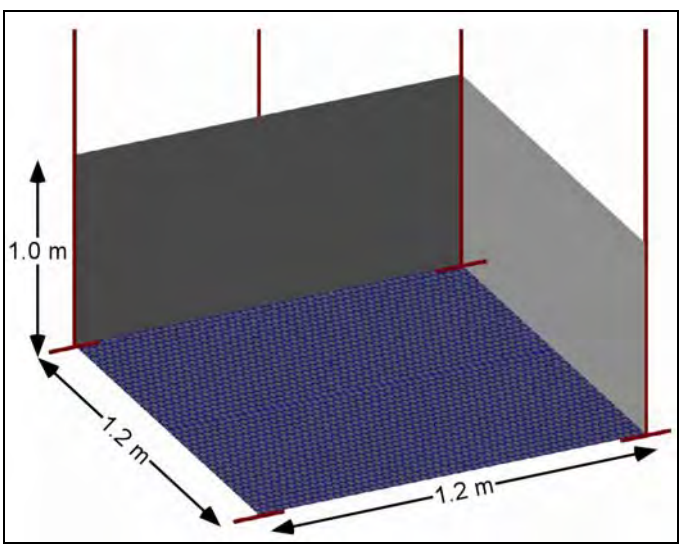

Figure 11. Estimated block volume for determining dead weight loading between the bolts.

For weak raveling ground conditions, a more realistic estimate of the expected volume of loose material that would load the shotcrete is depicted by the cone illustrated in Figure 12.

Equation 3 can be used to calculate the volume of loose material in this cone, and Equation 4 provides the dead weight load of this loose material.

$$V = \frac{1}{3}\pi\frac{d^2}{4}h \qquad (3)$$

where V = volume of cone

d = diameter,

h = height

$$V = \frac{1}{3}\pi\frac{1.2^2}{4}0.6 = 0.22\ m^3$$

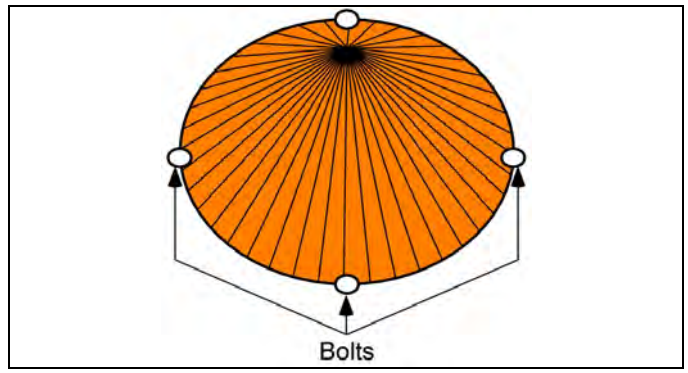

Figure 12. Estimated cone volume for determining dead weight loading between the bolts.

$$Wt_c = V * \gamma \qquad (4)$$

where Wt_c = dead weight of cone

V = volume of cone

γ = specific weight = 2.7 t/m^3

Wt_c = 0.22 m^3 * 2.7t/m^3 = 0.6 tonnes

Because 10 kN is equivalent to 1.0 tonnes, the 0.6-tonnes dead weight of the loose material in the cone volume can be converted to an equivalent force of 6 kN. This critical load can then be used in conjunction with the RDPT results shown in Figures 9 and 10 and the values listed in Tables 2-7 to determine the required flexural strength of the shotcrete mix and in turn, to assess the stability of in-place shotcrete. For example, the peak flexural strength at first break for the RDPT tests, which were conducted, was usually much greater than 6 kN indicating that the shotcrete mix design is more than adequate. To assess the stability of in-place shotcrete, the 6-kN critical load can be compared with the residual strength of the shotcrete shown in Figures 9 and 10 and listed in Tables 2-7. If the shotcrete has cracked, the load versus displacement curves for both the steel fiber and poly f ber shotcrete indicate that the shotcrete may not be stable after more than 10 mm of displacement. Because the movement of the shotcrete is difficult to detect, much less determine underground, the dilation or width of the exposed crack on the surface of the shotcrete may be a more appropriate indication of the deformation of the shotcrete after first break. Comparing the 6-kN critical load with the post peak load values after first break that are listed in Tables 2-7, it appears that none of shotcrete panels, which were tested, would be able to safely support this critical load for an extended period of time. Furthermore, the tables indicate that after the round panel crack dilation has reached about 2 mm, the shotcrete panel will no longer support the critical load.

However, these calculations and comparisons do not account for the quality of the applied shotcrete or its adhesion strength, both of which significantly affect the ground support capability of the in-place shotcrete. In addition, the round panel test does not exactly replicate the loading and failure conditions of in-place shotcrete, and a maximum expected load is estimated from the critical load calculations, rather than the actual load applied to the shotcrete which should be much less. As a result, the shotcrete design methodology mentioned above is a good initial approach, but further research is needed to quantitatively relate the crack width of the shotcrete to its residual strength, and thus the load that it is able to safely support after the shotcrete has cracked.

Comparison of Fiber Reinforced Shotcrete Strength to Welded Wire Mesh Bag Strength

To relate the ground support capability of shotcrete with that of wire mesh, the peak flexural strength of the shotcrete at first break can

be compared with the wire mesh bag strength values listed in Table 8. After 28 days of curing, the average peak flexural load for the steel fiber shotcrete was approximately 19 kN (1.9 tonnes) (Table 4) and about 21 kN (2.1 tonnes) for the poly fiber shotcrete (Table 7). These peak loads are equivalent to the bag strength of 9-gauge 4x4 wire welded mesh and 12-gauge 4x4 welded wire mesh, respectively.

Table 8. Wire bag strengths. (Pakalnis, 2002)

Screen - bag strength 4 ft by 4 ft pattern

Item	Gauge	Bag strength, tonnes
4 x 4-in welded wire mesh	4	3.6
4 x 4-in welded wire mesh	6	3.3
4 x 4-in welded wire mesh	9	1.9
4 x 2-in welded wire mesh	12	1.4
2-in chain link	11 - bare metal	2.9
2-in chain link	11 - galvanized	1.7
2-in chain link	9 - bare metal	3.7
2-in chain link	9 - galvanized	3.2

4 gauge = 0.23-in diam, 6 gauge = 0.20-in diam,
9 gauge = 0.16-in diam, 11 gauge = 0.125-in diam,
12 gauge = 0.11-in diam
Shotcrete shear strength = 2 MPa = 200 tonnes/m^2

CONCLUSIONS

A testing program was devised and demonstrated for determining the residual strength of fiber reinforced shotcrete. Tests showed that a visible crack indicated that the test specimen had already gone beyond the "peak crack strength" and is approaching residual load. This occurs at 5~10 mm vertical panel deflection.

A method is also demonstrated for determining ground support loads for shotcrete mixes that are equivalent to various grades of wire mesh. For example, these results show that a 9-gauge 4x4 wire mesh with 1.9-tonnes load capacity is equivalent to a commercial steel fiber reinforced shotcrete after 28 days of curing with a peak flexural load of 1.9 tonnes at first break.

These test results indicate that the ground support capacity of shotcrete varies with crack aperture during deformation. This information is useful for assessing the residual strength of bagged fiber reinforced shotcrete in situ. For example, 16 mm of crack dilation was shown to provide only 1.19 kN (0.1 tonnes) of residual strength, which is virtually null.

The findings and conclusions presented in this document have not been formally disseminated by the National Institute for Occupational Safety and Health and should not be construed to represent any agency determination or policy and mention of any company name or product does not constitute endorsement by NIOSH.

ACKNOWLEDGEMENTS

The authors would like to thank James Schumacher with Thiessen Team USA in Elko, Nevada and Vince Mendive with Thiessen Team USA in Big Timber, Montana for their technical support concerning commercially available shotcrete mixes. We also thank Justin Deemer and Rocky Wegland at Westech Automation in Spokane, WA for their technical and mechanical assistance developing the portable RDPT machine.

REFERENCES

ASTM 1550-05, 2005, flexural toughness of Fiber-Reinforced Concrete (using centrally-loaded round panel) ASTM West Conshohocken PA 2005.

Barton, N., Lien, R., Lunde, J., 1974, Engineering Classification of Rock Masses for the Design of Tunnel Support. Rock Mechanics and Rock Engineering, 1974, Springer_Verlag, pp.189-236.

Bernard, E.S. and Pireher, M., 2000, The use of Round Determinate Panels for the Assessment of Flexure Performance of Fiber Reinforced Concrete. Cement, Concrete and Aggerates, ASTM (submitted Feb 2000)

Diamantidis, D. and Bernard, E., 2004, "Comparison of methods for early age strength testing of shotcrete," *Shotcrete: More Engineering Developments*, Proceedings of the Second International Conference on Engineering Developments in Shotcrete, 4 October 2004, Cairns, Queensland, Australia, Bernard ed., Taylor and Francis Group, London, 2004, pp. 109-126.

Grant, N.B., Ratcliffe, R.C., Papworth, F., Design Guidelines for use of SFRS in Ground Support, Shotcrete: Engineering Developments, Bernard (ed) @ 2001, Swets & Zeitlinger, Lisse, ISBN 90 5809.176 7, pp.111-118.

Johnansen, K.W., 1972. Yeild Line Theory, Cement and Concrete association, UK.

Martin, L., Dunford, J., MacLaughlin, M., Coronoble, R., Tests of fiber - reinforced shotcrete at the Chief Joseph Mine, Butte, Montana , SME, Vol. 322, 2007 Transactions, pp. 61-64.

Pakalnis, R., 2002, Site Characterization Design of Underground Mine Openings, Notes taken during short course at Spokane Research Laboratory, May 28-29, 2002.

Papworth, F. 2002, Design Guidelines for use of Fiber Reinforced Shotcrete in Ground Support, American Shotcete Association, Shotcrete Magazine, spring 2002, pp.16-21.