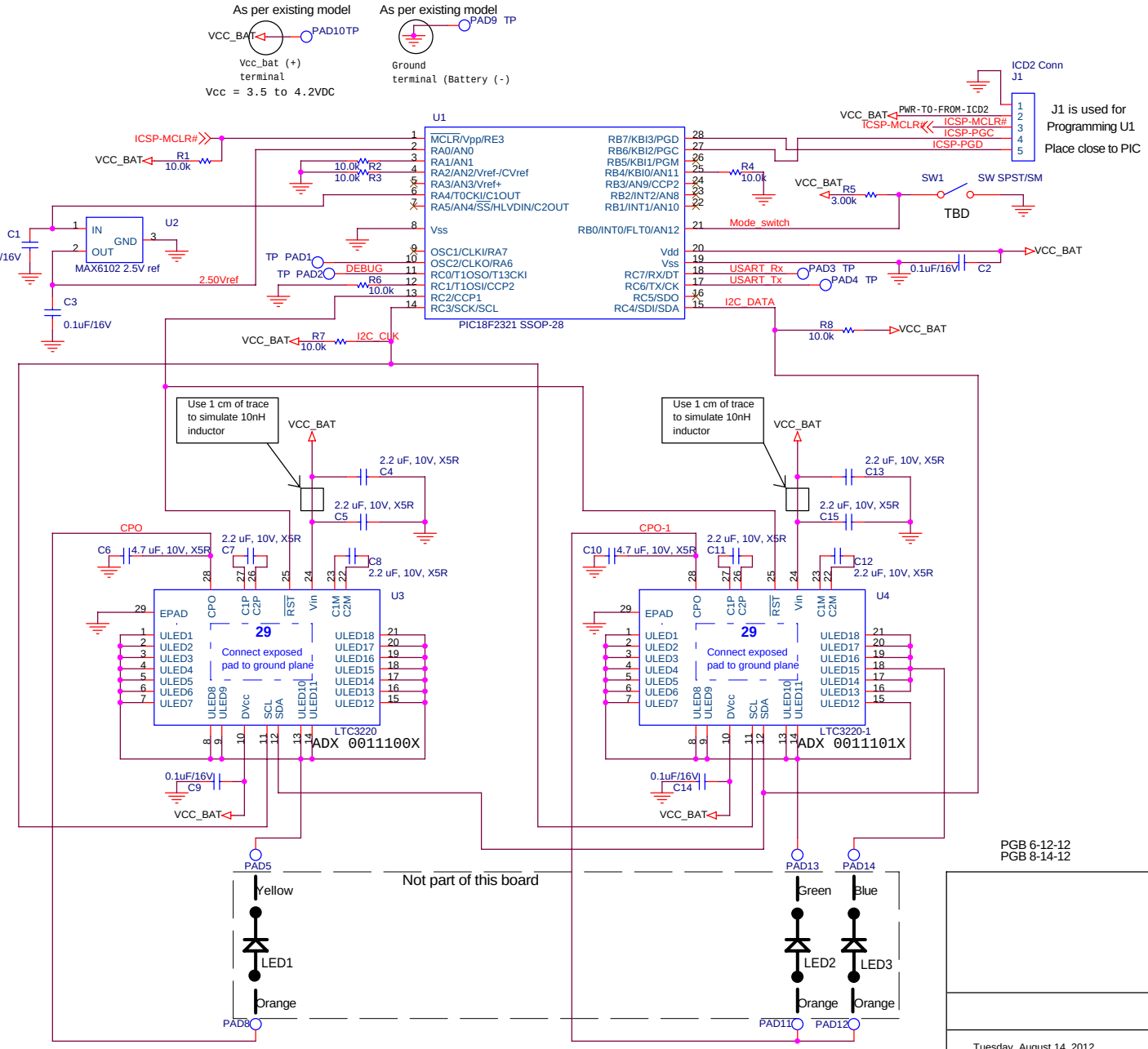

PGB 6-12-12
PGB 8-14-12

Record of Revisions

Date	Approval	Rev Level	Description of Change
02/28/2011	Peter B.	A	PR1 Revised with NIOSH/MSHA corrections and released to document control as Rev A

Revision History

PGB - 6-12-12
1. Ported from Gen 4, SH0120-01A

PGB - 8-14-12
1. Rewired U4 driver to LED2 and LED3 to 0 to 240 mA drive to LED2 and 0 to 120 drive to LED3.

Layout notes

1. Not used
2. Leave room for expected changes to some some components during debug.
3. Make 4 layer board. Two inner planes are ground and V_BAT.
4. Silk screen this schematic rev date onto the board as: "Sch. rev. mm/dd/yy"
5. Silk screen the current layout date onto the board as: "Layout rev. mm/dd/yy"
6. Use reasonable size font for silkscreen
7. All resistor values are shown in ohms unless indicated otherwise.
8. Use WIDE traces in general.
9. Mounting holes - Secured by 2 screws for power.
10. Trace CPO carries 360 mA. Use very WIDE Trace.
11. Pads on PIC USART and DEBUG pins are for debug. Make them just large enough to solder a wire if I need to use them.

LED SPECIALISTS
4250 Vets Memorial Hway
Suite 2060 West
Holbrook, NY 11741

SCHEMATIC DIAGRAM, NIOSH Led Cap Lamp - Gen 5 Led Driver

Size	CAGE Code	DWG NO	Rev
B			

Scale | Sheet 1 of 1

Tuesday, August 14, 2012