INTERIM SURVEY REPORT:

RECOMMENDATIONS FOR ERGONOMICS INTERVENTIONS

FOR SHIP CONSTRUCTION PROCESSES

at

LITTON INGALLS SHIPBUILDING SHIPYARD, Pascagoula, Mississippi

REPORT WRITTEN BY:
Stephen D. Hudock, Ph.D., CSP
Steven J. Wurzelbacher, M.S.

REPORT DATE:
August 2001

REPORT NO. EPHB 229-15b

U.S. DEPARTMENT OF HEALTH AND HUMAN SERVICES
Public Health Service
Centers for Disease Control and Prevention
National Institute for Occupational Safety and Health
Division of Applied Research and Technology
Engineering and Physical Hazards Branch
4676 Columbia Parkway, Mailstop R-5
Cincinnati, Ohio 45226

Approved for public release; distribution is unlimited
Government Purpose Rights

PLANT SURVEYED:	Litton Ingalls Shipbuilding shipyard, Litton Ship Systems, 1000 Access Road, Pascagoula, Mississippi 39567.
SIC CODE:	3731
SURVEY DATE:	March 20-21, 2000
SURVEY CONDUCTED BY:	Stephen D. Hudock, NIOSH; Steven J. Wurzelbacher, NIOSH; Karl V. Siegfried, MEMIC; Kevin McSweeney, ABS
EMPLOYER REPRESENTATIVES CONTACTED:	Gerald St. Pé, Chief Operating Officer, Litton Ship Systems; W. Patrick Keene, President, Litton Ingalls Shipbuilding; Tim Hammerstone, Safety Engineer, Litton Ingalls Shipbuilding; Ulises Chavez, Industrial Hygienist, Litton Ingalls Shipbuilding
EMPLOYEE REPRESENTATIVES CONTACTED:	Doug Howard, IBEW Local #733; Mike Crawley, President, Pascagoula Metal Trades Council
MANUSCRIPT PREPARED BY:	Diana R. Flaherty

DISCLAIMER

Mention of company names and/or products does not constitute endorsement by the Centers for Disease Control and Prevention (CDC).

ABSTRACT

A pre-intervention quantitative risk factor analysis was performed at various shops and locations within Litton Ship Systems, Litton Ingalls Shipbuilding shipyard in Pascagoula, Mississippi as a method to identify and quantify risk factors that workers may be exposed to in the course of their normal work duties. This survey was conducted as part of a larger project, funded through Maritech Advanced Shipbuilding Enterprise and the U.S. Navy, to develop projects to enhance the commercial viability of domestic shipyards. Several operations were identified for further analysis including: abrasive blasting, hatch assembly, pipe welding, subassembly grinding, and on-board cable pulling. The application of exposure assessment techniques provided a quantitative analysis of the risk factors associated with the individual tasks. Possible engineering interventions to address these risk factors for each task are examined in this report.

I. INTRODUCTION

IA. BACKGROUND FOR CONTROL TECHNOLOGY STUDIES

The National Institute for Occupational Safety and Health (NIOSH) is the primary Federal agency in occupational safety and health research. Located in the Department of Health and Human Services, it was established by the Occupational Safety and Health Act of 1970. This legislation mandated NIOSH to conduct a number of research and education programs separate from the standard setting and enforcement functions carried out by the Occupational Safety and Health Administration (OSHA) in the Department of Labor. An important area of NIOSH research deals with methods for controlling occupational exposures to potential chemical and physical hazards.

Since 1976, NIOSH has conducted a number of assessments of health hazard control technology on the basis of industry, common industrial process, or specific control techniques. Examples of the completed studies include the foundry industry; various chemical manufacturing or processing operations; spray painting; and the recirculation of exhaust air. The objective of each of these studies had been to document and evaluate effective control techniques for potential health hazards in the industry or process of interest, and to create a more general awareness of the need for or availability of an effective system of hazard control measures.

These studies involve a number of steps or phases. Initially, a series of walk-through surveys is conducted to select plants or processes with effective and potentially transferable control concepts or techniques. Next, in-depth surveys are conducted to determine both the control parameters and the effectiveness of these controls. The reports from these in-depth surveys are then used as a basis for preparing technical reports and journal articles on effective hazard control measures. Ultimately, the information from these research activities builds the data base of publicly available information on hazard control techniques for use by health professionals who are responsible for preventing occupational illness and injury.

IB. BACKGROUND FOR THIS STUDY

The background for this study is reported in “Preliminary Survey Report: Pre-Intervention Quantitative Risk Factor Analysis for Ship Construction Processes at Litton Ingalls Shipbuilding Shipyard, Pascagoula, Mississippi,” document number EPHB 229-15a by Hudock et al, 2000.

IC. BACKGROUND FOR THIS SURVEY

Litton Ship Systems, Litton Ingalls Shipbuilding facility was selected for a number of reasons. It was decided that the project should look at a variety of yards based on product, processes and location. Litton Ship Systems is one of the nation’s leading full service systems companies for the design, engineering, construction and life cycle support of major military and commercial vessels. Litton Ingalls Shipbuilding builds, repairs and overhauls military vessels including

AEGIS class guided missile destroyers and multipurpose amphibious assault ships. In addition, Litton Ingalls Shipbuilding also constructs oil rigs and has begun construction on the first domestically built commercial cruise ships in over forty years. Litton Ingalls Shipbuilding facility is considered to be a large shipyard.

II. PLANT AND PROCESS DESCRIPTION

IIA. INTRODUCTION

Plant Description: The Litton Ingalls Shipbuilding shipyard is located on the Gulf of Mexico in Pascagoula, Mississippi. The shipyard consists of two neighboring facilities. The primary, or West Bank, facility encompasses 600 acres, including five major module assembly areas or lines. In 1988, approximately 181,000 square feet of the yard's slab area was brought under roof to facilitate pre-outfitting operations. Construction is underway to roughly double the amount of square footage under roof. Vessels are currently launched from a drydock that is about 850 feet in length and 174 feet wide. New sections are being built at the shipyard to lengthen the drydock to accommodate longer vessels. Currently, approximately 4,700 feet of berthing space is available but this is also being expanded due to new contracts. A 600-ton capacity crane is being built to accommodate larger blocks or units.

Corporate Ties: Litton Ingalls Shipbuilding is a division of Litton Industries and a Litton Ship Systems Company. Litton Ship Systems also operates Litton Avondale Industries, a shipyard near New Orleans, Louisiana.

Products: Litton Ingalls Shipbuilding, as of March 1, 2000, is under contract to the U.S. Navy to deliver thirteen AEGIS class guided missile destroyers and one multipurpose amphibious assault ship. Additionally, the shipyard is overhauling and modernizing two frigates for the Venezuelan Navy. Contracts have been signed to build two 1,900-passenger, 840-foot luxury cruise ships for the Hawaiian Islands market, the first large cruise ships to be built in this country in over forty years.

Age of Plant: Litton Ingalls Shipbuilding original, or East Bank, facility has been in operation since 1938. The main, or West Bank, facility was opened in 1970 and is currently undergoing a major capital expenditure program to upgrade facilities.

Number of Employees, etc: As of the date of the survey, the Litton Ingalls Shipbuilding facility employed a total of 10,200 workers. Of this number, 6,823 are considered production workers.

IIB. PROCESS DESCRIPTION

IIB1. Abrasive Blasting in Steelyard Process

Steel structures are blasted by employees utilizing specialized blast guns which propel steel shot or silica sand at an item at up to 100 PSI, thus removing all foreign debris and pitting the steel which provides for better adherence of the paint coating to the steel. Blasters are completely covered with protective clothing including positive pressure respirators. Blast hose is heavy and difficult to bend around and manipulate in tight areas. Moderate force must be exerted to hold blast nozzle as the energy created by the steel shot or sand being propelled at a high velocity raises the nozzle. The forces involved in this task are somewhat similar to the forces exerted by firefighters handling large hoses.

Figure 1. Abrasive Blaster Blasting Material Above Waist Height

IIB2. Shipboard Cable Pulling Process

Multiple lines of cable varying in length, size and weight are pulled by hand throughout areas of the ship. The larger cable pulls are performed by workers in groups numbering as high as 20. The size of the crew is largely dependent on the size, length, routing and final location of cable. Cable pulling in a variety of postures and with varying sizes of cable was analyzed. Cable runs are located overhead, along bulkheads, and below deck plate level. All cable is secured into cable trays and tagged whenever passing through a bulkhead or deck. When running from one deck to another, the cable passes through oval openings or transits, which are later packed to assure an air- and water-tight seal. Installing cable requires the workers to assume a variety of postures. In Figures 2 and 3, the worker is pulling smaller cable horizontally through a cable tray overhead. Figure 4 shows a worker pulling down on large diameter cable, weighing about 7

pounds per linear foot. Figure 5 shows a worker pushing large diameter cable upward to pass through a transit or opening between decks.

Figure 2. Cable Puller Pulling 1.5" Diameter Cable Horizontally Overhead

Figure 3. Close-up of Cable Puller Pulling 1.5" Diameter Cable Horizontally Overhead

Figure 4. Cable Puller Pulling 2-3" Diameter Cable Downward, Mid Pull

Figure 5. Cable Puller Crouching, Beginning to Push-Up 2-3" Diameter Cable

IIB3. Shop Pipe Welding Process

A certain amount of assembly of piping systems is conducted in the shop area of the shipyard prior to pre-outfitting the unit on land. Pipe positioning units are provided to allow the welder to position the pipe in whichever attitude is necessary to make the weld easiest to complete. Figure 6 shows a welder positioning a pipe in the unit. Figure 7 demonstrates the welder in a flexed posture despite having the ability to adjust the positioner and pipe subassembly to any attitude.

Figure 6. Welder Positioning Piece to be Welded

Figure 7. Welder Welding Piece in Flexed Posture Despite Positioner

IIB4. Panel Line Grinding Process

In the panel line, horizontal and vertical stiffeners are welded to steel plate to create subassemblies. This requires the worker to use a variety of tools including welding units, pneumatic grinders and needle guns. The position of the stiffeners is marked on the steel plate according to the blueprints. Then the stiffeners are placed along the marked pattern and held in place by a co-worker while being tack welded. A final complete seam weld is placed to secure the stiffener to the plate. Then grinders or needle guns are used to smooth out the weld and any weld splatter (Figure 8). Once the subassemblies are completed, they are combined into blocks or units.

Figure 8. Panel Line Worker Grinding

IIB5. Manhole and Hatch Assembly Process

There are approximately three thousand manhole or hatch covers made for every vessel produced by Litton Ingalls Shipbuilding. Every manhole cover must be attached to its base by bolts or studs. These studs are attached to each plate in a process called stud welding. Stud welding permits the fastening of an assembly to a structure without piercing the metal of the structure. In manhole and hatch assembly, stud welding eliminates drilling or punching holes in a hatch or manhole plate while attaching bolts or studs to the plate. A special collet on the stud welding gun holds the stud in the nose of the gun and an electric current is passed to the stud. The fluxed end of the stud is placed in contact with the steel plate. The stud is automatically retracted from the plate surface which produces an arc. At the end of an automatically timed period, the molten end of the stud is forced against the molten metal pool on the plate resulting in the stud being securely welded to the plate.

Studs can range in size from ½-inch to 7/8-inch in diameter. A typical manhole cover has approximately 26 studs attached to it. A worker can complete about 15 to 20 covers in a day, meaning that about 400 to 500 studs are welded to hatch covers each day. The stud gun weighs approximately 12 pounds. In Figure 9, the worker is lifting the manhole plate onto the work table. In Figure 10, the worker is clamping the hatch cover to the work surface. In Figure 11, the worker is seen operating the stud gun to weld the stud onto the hatch cover.

Figure 9. Manhole Assembler Lifting Manhole Cover onto Worktable

Figure 10. Manhole Assembler Clamping Hatch

Figure 11. Manhole Assembler Operating Stud Shooter

III. ERGONOMIC INTERVENTION COST JUSTIFICATION

The following section has been adapted from the article by Alexander, 1998.

The effectiveness of any ergonomic intervention does not necessarily correlate with the cost of implementing that intervention. The possibility exists for a very effective intervention to be found at a low implementation cost, as well as, the possibility of the opposite. The preferred intervention strategy from a business sense is to implement those interventions with the lowest costs and the highest effectiveness. This point can be illustrated by the value/cost matrix as illustrated in Figure 12.

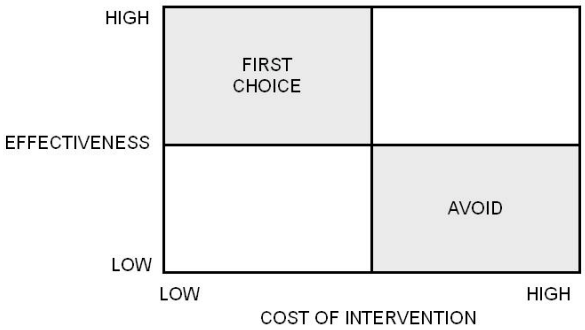

Figure 12: Value Cost Matrix

There are a number of benefits that can be credited to the application of ergonomic interventions in general. These benefits are listed below.

- Avoidance of current expenses and ongoing losses, including:
  - Workers compensation costs
  - Overtime for replacement workers
  - Lost productivity, quality or yields from less skilled workers
  - Increased training and supervisory time

- Enhanced existing performance
  - Increased productivity including fewer bottlenecks in production, higher output, fewer missed delivery dates, less overtime, labor reductions, and better line balancing
  - Improved quality including fewer critical operations, more tasks with every operator's control and capacity, and fewer assembly errors
  - Increased operating uptime including faster setups, fewer operating malfunctions, and less operator lag time.
  - Faster maintenance including increased access, faster part replacement, fewer tools needed, more appropriate tools, more power and faster tool speeds.

- Enhanced quality of worklife
  - Less turnover
  - Less employee dissatisfaction

- Fewer traumatic injuries

- Fewer human errors resulting in lost product or operating incidents

- Reduced design and acquisition costs

In addition to the direct medical costs associated with worker injuries, one must also consider the indirect or hidden costs associated with the primary worker being away from their job. These indirect costs are listed below.

- Costs of replacement workers
  - Hiring costs for permanent replacements plus training and other costs
  - Additional costs for temporary workers who may also have lower work skills

- Lower productivity
  - Fewer units per hour
  - Lower yields
  - Damage to material or equipment that would not occur with an experienced worker

- Lower quality
  - Number of rejects
  - Amount of rework
  - Timeliness of product delivery

- Increased supervision
  - Cost to manage/train a less skilled worker

- Training to develop and maintain job skills
  - Amount of lost work time
  - Time of trainer.

Many of these indirect costs are difficult to estimate and can vary widely depending on the severity of the injury involved. The ratio of indirect costs to direct costs has also been found by a number of studies to vary between 5:1 to 1:5, depending on industry (Heinrich, 1931, 1959; Levitt et al, 1981; Andreoni, 1986; Leopold and Leonard, 1987; Klen, 1989; Hinze and Applegate, 1991; Oxenburgh, 1991, 1993). As a conservative estimate, the state of Washington recently decided upon indirect costs of 75 percent of direct workers' compensation incurred costs (WAC 296-62-051, 2000).

Another aspect of ergonomic interventions that must be considered is the cost benefit analysis. If total costs outweigh all benefits received from implementing the intervention, then the intervention is not worth undertaking. One has to determine the associated start-up costs, recurring costs, and salvage costs of the intervention as well as the time value of money (present worth versus future worth) and the company's Minimum Attractive Rate of Return, the interest rate the company is willing to accept for any project of financial undertaking.

IV. CONTROL TECHNOLOGY

Possible interventions and control technologies are mentioned briefly here. A more detailed report of possible interventions is in preparation.

IVA. POSSIBLE INTERVENTIONS FOR ABRASIVE BLASTERS IN THE BEACH BLAST AREA

Possible interventions for the abrasive blasters in the beach blast area include adjustable racks to hold the materials to be blasted at approximately knee to waist height. This would reduce the amount of back flexion required for the job. Racks that allow certain workpieces to be hung would also reduce the amount of material handling that the abrasive blaster is required to perform in order to blast all sides of the material. Existing racks within the beach blast area can also be easily made adjustable by utilizing leveling jacks to raise the racks.

Table 1: Approximate Leveling Jacks Characteristics

Capacity	10,000 lbs (static) 2,000 lbs (lifting)
Vertical Height (below frame of equipment)	4.5 inches (minimum) 25.5 inches (maximum)
Cost of Jacks	$120* 4 (per rack) * 4 racks = $1920
Cost of Labor	$400
Total Cost	$2320

In identifying benefits of the intervention, one can use the medical and indemnity cost estimates as shown in Table 2 to calculate direct costs.

Table 2: Estimated[1] Shipyard Direct Injury Costs for Musculoskeletal[2] Injuries (medical + indemnity) by Part of Body

[1] Based on analysis of available participating shipyard compensation data from 1996 - 1998

[2] Does not include contusions or fractures

Ankle(s)	$2,390
Arm(s), unspecified	$7,725
Back	$6,996
Elbow(s)	$4,691
Finger(s)	$735
Hand(s)	$6,857
Knee(s)	$7,472
Leg(s), unspecified	$849
Neck	$5,961
Shoulder(s)	$4,960
Wrist(s)	$3,925
Mean Musculoskeletal Injury Cost = $5523	

From 1996 to 1998 Ingalls experienced at least sixteen musculoskeletal injuries to painters performing sandblasting activities. The total estimated medical and indemnity cost of these injuries was $105,818, based upon the above shipyard industry average costs by part of body injured. If the sixteen injuries can be said to be due to the specific sandblasting task observed in the beach blast area, the average annual estimate direct cost (over the last three years) for musculoskeletal injuries that may be preventable by measures to relieve the postures and stresses associated with this task is $35,273. If indirect costs are conservatively assumed to be 75% of the direct costs, the total cost of these injuries per year is $61,727. It is this amount that can be considered an "avoided cost" and, therefore, a benefit due to the implementation of the intervention. Assuming, the intervention fully eliminates such injuries, a simple benefit to cost ratio would be $61,727/$2,320 or 26.6. Since the benefit to cost ratio is greater than one, it is advantageous and cost-effective to implement the proposed intervention. However it is possible that only one-tenth of the estimated annual injury cost is saved each year. It is also possible that the leveling jacks last 2 years. Assuming that the shipyard has a minimum attractive rate of return of 20 percent for any project cash outlay, one can still calculate a benefit to cost ratio by utilizing the following equation to determine the present worth of an annual savings:

Equation 1: $$PW = AS \times \frac{\left[(1+i)^n - 1\right]}{i \times (1+i)^n}$$

where PW = present worth
AS = annual savings
i = interest rate (ex., 0.20 for 20 percent)
and n = number of years.

Using an annual savings of just $6,172 (one-tenth of the estimated annual injury cost-- less than a single back injury) at an interest rate of 20 percent over a two year period, the present worth of the proposed savings would be $9,431. Assuming initial costs of the leveling jacks are $2,320 and negligible annual costs, the benefit to cost ratio of implementing this intervention is $9,431/$2,320 or 4.1, greater than one, and therefore still economically advantageous.

IVB. POSSIBLE INTERVENTIONS FOR SHIPBOARD CABLE PULLERS

Possible interventions for the shipboard cable pullers include work rotation among pullers so that time spent in postures involving overhead work, kneeling, and back flexion are minimized and work practices to begin pulls in the middle of the cable rather than at the end (which requires pulling the entire length of cable in one pull). Semi-automated cable pulling systems are also commercially available and may be able to be integrated into the current manual pulling method. These systems typically use a cable-pulling winch (capstan), double braided low stretch ropes, pulleys, and Teflon sheets to reduce cable friction. The ropes are attached to the end of the cable and capstan pulls at a range of speeds and in a wide range of positions. Most capstans are self-contained and allow for easy transport and set-up shipboard. The capstan pulling system may be able to be coupled with portable inline pullers that are also commercially available. Preliminary testing with similar systems aboard Navy vessels "indicate a potential for reducing cable pulling

time and costs by as much as 50% with no personnel injuries" (NAVOSH website, 2000). Cost and specifications for a suggested system are provided below.

Table 3: Approximate Cable Pulling System Components and Prices

QTY.	COMPONENT	UNIT COST	TOTAL COST
3	ULTRA TUGGER	$5,603.89	$16,811.67
3	FOOT SWITCH	$287.78	$863.34
12	12" HOOK SHEAVE	$185.50	$2,226.00
6	24" HOOK SHEAVE	$488.60	$2,931.60
12	TRAY-TYPE SHEAVE	$77.70	$932.40
12	STRAIGHT CABLE ROLLERS	$84.00	$1,008.00
12	RADIUS CABLE ROLLERS	$116.20	$1,394.40
4	RIGHT ANGLE ROLLERS	$460.60	$1,842.40
20	NYLON CABLE PROTECTOR	$2.56	$51.20
10	NYLON CABLE PROTECTOR	$3.96	$39.60
20	CABLE GUIDE	$12.60	$252.00
3	PULLING ROPE (600')	$1,557.50	$4,672.50
10	BASKET TYPE PULLING GRIP	$193.20	$1,932.00
10	BASKET TYPE PULLING GRIP	$250.60	$2,506.00
		$9,324.69	$37,463.11

Figure 13. Cable Pulling Capstan or Winch

Figures 14a and 14b. Sheaves for Cable Pulling

Figure 15. Cable Being Attached to Pull Rope

In identifying benefits of the intervention, one can use the medical and indemnity cost estimates as shown in Table 2 to calculate direct costs. From 1996 to 1998 Ingalls experienced at least 114 musculoskeletal injuries to shipboard cable pullers. The total estimated medical and indemnity cost of these injuries was $682,529, based upon the above shipyard industry average costs by part of body injured. If the 114 injuries can be said to be due to the specific cable pulling tasks studied, the average annual estimate direct cost (over the last three years) for musculoskeletal injuries that may be preventable by measures to relieve the postures and stresses associated with these tasks is $227,510. If indirect costs are conservatively assumed to be 75% of the direct costs, the total cost of these injuries per year is $398,142. It is this amount that can be considered an "avoided cost" and, therefore, a benefit due to the implementation of the intervention. Assuming, the intervention fully eliminates such injuries, a simple benefit to cost ratio would be $398,142/$37,463 or 10.6. Since the benefit to cost ratio is greater than one, it is advantageous

and cost-effective to implement the proposed intervention. However it is possible that only one-tenth of the estimated annual injury cost is saved each year. It is also possible that the cable pulling system lasts 2 years. Assuming that the shipyard has a minimum attractive rate of return of 20 percent for any project cash outlay, one can still calculate a benefit to cost ratio by utilizing the following equation to determine the present worth of an annual savings:

Equation 1: $$PW = AS \times \frac{\left[(1+i)^n - 1\right]}{i \times (1+i)^n}$$

where PW = present worth
AS = annual savings
i = interest rate (ex., 0.20 for 20 percent)
and *n* = number of years.

Using an annual savings of just $39,814 (one-tenth of the estimated annual injury cost) at an interest rate of 20 percent over a two year period, the present worth of the proposed savings would be $60,827. Assuming initial costs of the cable pulling system are $37,463 and negligible annual costs, the benefit to cost ratio of implementing this intervention is $60,827/$37,463 or 1.62, greater than one, and therefore still economically advantageous.

IVC. POSSIBLE INTERVENTIONS FOR PIPE WELDERS IN PIPE SHOP

Possible interventions for pipe welders using positioners mainly include training to optimally set the weld positioner to provide a work height that both reduces back flexion and still enables flat welding to be performed.

IVD. POSSIBLE INTERVENTIONS FOR GRINDERS IN THE PANEL LINE ASSEMBLY AREA

Possible interventions for grinders in the panel line assembly area include adjustable lift tables with jig tops to elevate the various subassemblies prior to grinding and needlegun operations to minimize back flexion.

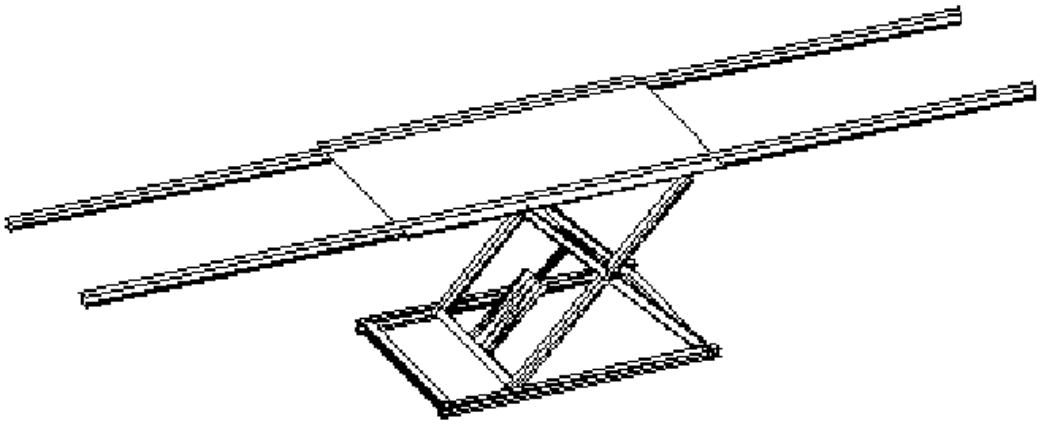

Figure 16. Lift Table with Jig Support Beams

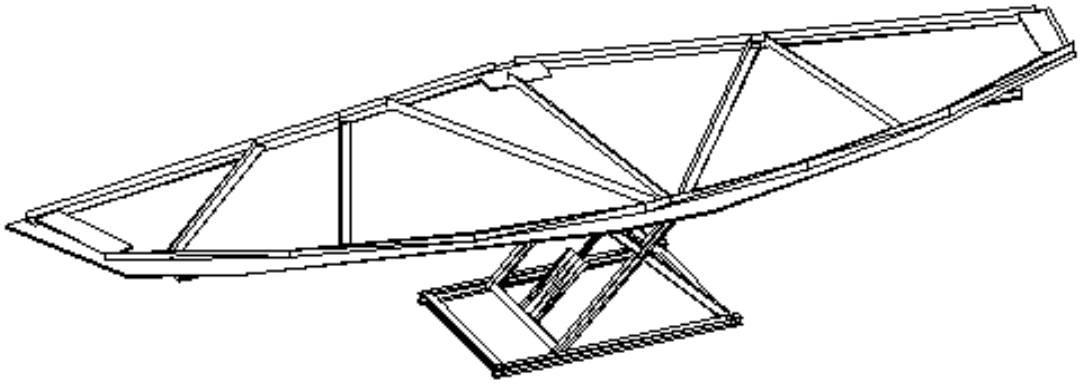

Figure 17. Lift Table with Example Sub-Assembly on Top

Process changes (e.g. weldable primer, more efficient and clean welding processes) to reduce the amount of required grinding may also be explored. Portable, self-contained abrasive blasting units may also be able to be used instead of manual grinding in some cases. Approximate lift table characteristics are provided below. Considering the approximate weight of the typical subassemblies may be 1000 pounds and the weight of the jig table top is greater than 1000 pounds, it is suggested that a 2-ton lift table be utilized for this process to work well within the capacity of the lift table.

Table 4. Approximate Jig Table Intervention Components and Prices

Jig Table Materials		
Material	Dimension	Cost
2 Jig Table Support Beams	10' x 3.5" x 3.5" x 5/16" each	$100
24 Assorted Jig Supports	6" x 3.5" x 3.5" x 5/16" each	$50
Jig Table Top	10' x 10'	$400

Approximate Lift Table Parameters	
Capacity	4,000 pounds
Lowered Height	6.5 inches
Raised Height	42.5 inches
Table Dimensions	48 inches x 48 inches
Voltage	115Volt, 60Hz , 1 phase
Price	$2,970

Cost Summary of Jig Table Intervention	
Cost of Raw Materials	$550 * 2 = $1100
Cost of Lift Table(s)	$2,770 * 2 = $5,540
Cost of Labor	$400
Total Cost	$7,040

In identifying benefits of the intervention, one can use the medical and indemnity cost estimates as shown in Table 2 to calculate direct costs. From 1996 to 1998 Ingalls experienced at least fifteen musculoskeletal back injuries to workers performing flat grinding tasks . The total estimated medical and indemnity cost of these injuries was $104,940, based upon the above shipyard industry average costs by part of body injured. If the fifteen back injuries can be said to be due to the specific grinding task studied, the average annual estimate direct cost (over the last three years) for back injuries that may be preventable by measures to relieve the postures and stresses associated with these tasks is $34,980. If indirect costs are conservatively assumed to be 75% of the direct costs, the total cost of these injuries per year is $61,215. It is this amount that can be considered an “avoided cost” and, therefore, a benefit due to the implementation of the intervention. Assuming, the intervention fully eliminates such injuries, a simple benefit to cost

ratio would be $61,215/$7,040 or 8.7. Since the benefit to cost ratio is greater than one, it is advantageous and cost-effective to implement the proposed intervention. However it is possible that only one-tenth of the estimated annual injury cost is saved each year. It is also possible that the adjustable jig tables last 2 years. Assuming that the shipyard has a minimum attractive rate of return of 20 percent for any project cash outlay, one can still calculate a benefit to cost ratio by utilizing the following equation to determine the present worth of an annual savings:

Equation 1: $$PW = AS \times \frac{\left[(1+i)^n - 1\right]}{i \times (1+i)^n}$$

where PW = present worth
AS = annual savings
i = interest rate (ex., 0.20 for 20 percent)
and n = number of years.

Using an annual savings of just $6,122 (one-tenth of the estimated annual injury cost; less than one back injury prevented) at an interest rate of 20 percent over a two year period, the present worth of the proposed savings would be $9,352. Assuming initial costs of the adjustable jig table are $7,040 and negligible annual costs, the benefit to cost ratio of implementing this intervention is $9,352/$7,040 or 1.33, greater than one, and therefore still economically advantageous.

IVE. POSSIBLE INTERVENTIONS FOR MANHOLE ASSEMBLERS IN THE EAST SIDE FABRICATION SHOP

Possible interventions for the manhole assembler in the east side fabrication shop include an adjustable lift table to set the work height of the manhole above the waist to reduce back flexion during assembly operations. A similar table may also be used to store the manhole cover prior to assembly so that the piece is able to be lifted from a height that minimizes back flexion. Training in proper lifting techniques and in the setting of current adjustable equipment to optimal working heights may also be useful.

V. CONCLUSIONS AND RECOMMENDATIONS

Five work processes at Litton Ingalls Shipbuilding were surveyed to determine the presence of risk factors associated with musculoskeletal disorders. These processes included abrasive blasting in the beach blast area, shipboard cable pulling, pipe welding in the pipe shop, panel line grinding, and manhole assembly in the east side fabrication shop. In each process, certain work elements were found to be associated with one or more factors, including excessive force, constrained or awkward postures, contact stresses, vibration, and repetitive motions.

It is recommended that further action may be taken to mitigate the exposure to musculoskeletal risk factors within each of the identified tasks. The implementation of ergonomic interventions has been found to reduce the amount and severity of musculoskeletal disorders within the

working population in various industries. It is recommended that ergonomic interventions may be implemented at Litton Ingalls Shipbuilding facilities to minimize hazards in the identified job tasks.

Each of the interventions proposed in this document are to be considered preliminary concepts. Full engineering analyses by the participating shipyard are expected prior to the implementation of any particular suggested intervention concept to determine feasibility, both financially and engineering, as well as to identify potential safety considerations.

VI. REFERENCES

Alexander, D. C. Strategies for Cost Justifying Ergonomic Improvements. *IIE Soultions*, Institute of Industrial Engineers, Norcross, Georgia, March 1998, 30(3):30-35.

Andreoni, D. *The Costs of Occupational Accidents and Diseases*. Geneva: International Labor Office; 1986

Bureau of Labor Statistics Handbook of Methods, April 1997 web site edition.

Cohen, A. L., C. C. Gjessing, L. J. Fine, B. P. Bernard, and J. D. McGlothlin. *Elements of Ergonomics Programs: A Primer Based on Workplace Evaluations of Musculoskeletal Disorders*. DHHS, PHS, CDC, NIOSH, Cincinnati, Ohio, March 1997, Publication Number 97-117.

Heinrich, H.W. *Industrial Accident Prevention: A Scientific Approach*. 4th Edition. New York: Wiley; 1959

Hinze, J. and Applegate, L.L. Costs of Construction Injuries. *Journal of Construction Engineering and Management*. 1991; 117(3): 537-550.

Hudock, S. D., S. J. Wurzelbacher, K. Siegfried, and K. McSweeney. *Preliminary Survey Report: Pre-Intervention Quantitative Risk Factor Analysis for Ship Construction Processes at Litton Ingalls Shipbuilding Shipyard, Pascagoula, Mississippi.* DHHS, PHS, CDC, NIOSH, Cincinnati, Ohio, Report # EPHB 229-15a, June 2000.

Klen, T. Costs of Occupational Accidents in Forestry. *Journal of Safety Research*. 1989; 20(31):31-40.

Leopold, E. And Leonard, S. Costs of Construction Accidents to Employers. *Journal of Occupational Accidents*. 1987; 8:273-294.

Levitt, R.E. *Improving Construction Safety Performance*; 1982 Jan; Report A-3.

NAVOSH website, 2000 *Improved Ergonomic Cable Pulling Method*

Oxenburgh, M. *Increasing Productivity and Profit Through Health and Safety*. Austrailia: CCH International; 1991

Oxenburgh, M.S. and Guldberg, H.H. The Economic and Health Effects on Introducing a Safe Manual Handling Code of Practice. *International Journal of Industrial Ergonomics*. 1993; 12:241-253.

Washington State Ergonomics Rule. WAC 296-62-051. (2000).