8 FOOD CHAIN TRANSPORT

This chapter discusses the modeling of radionuclide migration in the food chain. The primary focus is uptake of radionuclides by plants and animals from contaminated environmental media. These contaminated media may include air, water, and soil. For uptake of radionuclides by terrestrial animals, contaminated media may also include plants. The primary reason for considering food chain transport is to estimate radionuclide concentrations in foodstuffs, both plant and animal products, that may be consumed by humans.

The starting point for estimating food chain transport is the radionuclide concentrations in air and water at various exposure locations. Previous chapters have discussed transport of radionuclides through the primary media of air and water; air transport is discussed in Chapter 6 and water transport is discussed in Chapter 7. For this study, food chain transport is simulated by several models that consider a variety of processes that include:

- For radionuclides transported by air:
  - Deposition of radionuclides onto vegetation and soil.
  - Uptake of radionuclides by plants from soil and plant surfaces.
  - Uptake of radionuclides by animals that consume plant products.
- For radionuclides transported by water:
  - Deposition of radionuclides into sediments.
  - Uptake of radionuclides by aquatic animals.

In general, the radionuclide concentrations in soil used to model food chain transport need not correspond to concentrations used to model direct exposure and inhalation; however, for this study these concentrations generally correspond. Therefore this chapter also discusses contamination of soil, to promote a compact presentation. This chapter qualitatively describes the models used and summarizes the values for many of the variables used to generate point-estimates of radiation dose and risk. All of the variable values may be found in Appendix E and Appendix F.

8.1 Introduction

The complete mathematical formulations of the models used for this study are documented in the GENII Version 2 Software Design Document (GENII SDD) (1). These generic models are implemented in the GENII computer code. This chapter discusses the use of these models, as implemented in the GENII computer code, to simulate transport of radionuclides in the food chain in the vicinity of the SRS for the 39-year period studied. The mathematical formulations for most of models discussed in this chapter are documented in Chapter 9 of the GENII SDD (1).

Transport of radionuclides in the food chain may be viewed as transport into and out of different compartments in the food chain, as shown schematically in Figures 4-2 and 4-3. The food chain compartments considered in this study of the SRS are: soil, plants, terrestrial animals, and aquatic animals. Radionuclides enter these compartments either directly from contaminated air and water or by transfer from another food chain compartment. For example, radionuclides may enter edible plants by direct deposition of radionuclides from contaminated air or by uptake from soil contaminated by airborne radionuclides. The mathematical models use the principle of mass conservation to estimate the concentration in a food chain compartment based on the rates of radionuclide input (e.g., deposition, uptake) and removal (e.g., radioactive decay, weathering).

The generic models implemented in the GENII computer code allow radionuclides to enter soil, plants, and animals from contaminated water; for example, animals may take up radionuclides from contaminated drinking water. However, agricultural practices in the vicinity of the SRS did not include use of the Savannah River or Lower Three Runs Creek for irrigation of crops or watering of farm animals. Other water sources used for agricultural purposes were considered to have low levels of contamination; these other water sources, may have been slightly contaminated by deposition of radionuclides from air, but did not receive liquid releases of radionuclides from the SRS. Therefore, the only instance of contaminated water transferring radionuclides to a food chain compartment that has been modeled is the contamination of shoreline sediments.

The remainder of this chapter is organized according to the four food chain compartments considered in this study of releases from the SRS: soil, plants, terrestrial animals, and aquatic animals; in addition, two special models for tritium and carbon-14 migration in the food chain are discussed in a separate section.

8.2 Soil Concentration

Soil concentrations are calculated differently, depending on the major physical processes involved in a particular situation. As with other concentrations calculated, soil concentrations are based on conservation of mass. However, depending upon the nature of the soil, different radionuclide addition and removal processes may be applicable. Some of the physical processes that might apply to terrestrial soils include:

- Deposition from air to surface soil.
- Deposition from water to surface soil during irrigation.
- Depletion by radioactive decay.
- Leaching from surface soil.
- Loss from surface soil during harvest of contaminated plants.
- Removal by resuspension of contamination and subsequent transport by wind.

For aquatic sediments the main process is deposition of radionuclides from contaminated water. Because irrigation with water contaminated by liquid releases from SRS facilities was not practiced during the period of time studied, deposition on farm land of radionuclides released to water by the SRS was not modeled. However, contamination of farm land by deposition of airborne radionuclides was modeled. Deposition of radionuclide contamination from water to sediments on the shoreline was modeled as a viable mechanism to contaminate soil.

8.2.1 Radionuclide Deposition from Air

Irrigation with contaminated water is not considered in this study because: 1) water from the Savannah River and Lower Three Runs Creek, which were contaminated by liquid releases from the SRS, was not used for irrigation and 2) contamination of other waters that might have been used for irrigation, such as reservoirs, ponds, and wells was considered to be slight.[1] For this reason, the only source of radionuclide contamination in terrestrial soils is deposition of airborne radionuclides.

Two types of deposition are usually modeled: 1) dry deposition and 2) wet deposition. "*Dry deposition* refers to any physical removal process that does not involve precipitation." "*Wet deposition* refers to

[1] As shown in Chapters 11 and 12, doses estimated for hypothetical receptors, including those exposed to contaminated water, were small. It is believed that concentrations in water bodies subject to contamination by SRS releases to water are likely to bound the concentrations in water bodies subject to radionuclide input only from air deposition. However, this has not been quantified; Chapter 13 recommends that a scoping study be performed to evaluate this issue.

processes in which atmospheric chemicals are accumulated in rain, snow, or fog droplets and are subsequently deposited onto Earth's surface." (2).

Dry deposition may involve several processes including gravitational settling, impaction onto plant and soil surfaces, and absorption by soil and plant surfaces. For small particles and gases, gravitational settling is negligible. The model implemented by the GENII code uses an electrical analogy to calculate a net deposition velocity from three separate "resistances" (s/m): aerodynamic resistance, surface resistance, and transfer resistance and the gravitational settling velocity. The aerodynamic and surface resistances depend upon the wind speed, as detailed in the GENII SDD (1). For this study the default values for transfer resistance were used: 10 s/m for gas (iodine) and 100 s/m for particles. To calculate the gravitational settling velocity for particles two key variables were the particle density and diameter; for the point estimates the values for these variables were chosen to be 2.0 g/cm^3 and 0.001 mm, respectively. The deposition velocity is calculated by combining the separate resistances and the gravitational settling velocity, if appropriate (not appropriate for gases and very fine particles). The dry deposition rate is then calculated from the deposition velocity and air concentration of each radionuclide for any given year:

$$R_{ai} = V_d C_{ai} \qquad (8\text{-}1)$$

Where R_{ai} is the rate of deposition from air, a, of radionuclide i (Bq/m^2/s);
V_d is the deposition velocity (m/s);
C_{ai} is the air concentration of radionuclide i in that year.

Clearly the concentration in air varies with the location of the exposure location at which the radionuclide deposition is to be calculated; however, for simplicity an index denoting this variability has not been included in the equation. The air concentrations of the radionuclides studied were obtained by the approach discussed in Chapter 5.

Wet deposition for gases considers that the gas is soluble in water, but partitions the gas between air and water according to Henry's Law. Henry's Law describes the ratio of the concentration of a chemical in air to the concentration in water at equilibrium. Wet deposition for particles uses the concept of a washout coefficient that describes the fraction of the air concentration of particles removed per unit distance of travel of precipitation. Default values build into the GENII code were used for the Henry's Law constants. The washout coefficient is computed based on the precipitation rate during a precipitation event. A key variable for wet deposition is the average daily rain rate, which was taken to be 11.4 mm/d, based on data from 1970-99 (3). The GENII code has the option to allow a more refined treatment of wet deposition by specifying the fraction of time precipitation occurs for various stability classes (4). This option was exercised using the data specified in Appendix U, Table U-3.

8.2.2 Radionuclide Concentration in Soil – Direct Exposure

To estimate the concentration of radionuclides in soil for determining dose resulting from direct exposure from the ground plane, most removal processes are not considered; the only removal process considered is radioactive decay. Thus a key variable in determining these concentrations is the decay constant for each radionuclide. These are well established and are incorporated into one of the many GENII databases.

For direct exposure calculations, the average concentration in the soil is used, considering the total air deposition rate, at a particular exposure location, and radioactive decay. Every year was considered separately and for this study the radionuclide concentration at the beginning of each year was assumed to be zero. Consequently radionuclide buildup in the soil was not modeled (either for direct exposure or agricultural exposure), which may underestimate some doses. Some long-lived radionuclides may have

persisted in the soil from year to year, but the results of this study suggest that dose pathways for these radionuclides were not likely to be significant. The model used to estimate soil concentration assumes that radionuclides deposited from the air onto the soil surface is mixed uniformly to a certain depth. For this reason, the concentration of radionuclides in the soil depends on the depth to which mixing is assumed to occur and the bulk density of the soil. For this study, the mixing depth was set to 15 cm and the bulk soil density set to 1.6 g/cm^3; these values are frequently used as nominal values in studies of this type (5).

8.2.3 Radionuclide Concentration in Soil – Agricultural Exposure

To estimate the concentration of radionuclides in soil for determining dose resulting from agricultural pathways, such as uptake by plants, removal processes in addition to radioactive decay must be considered. Two additional removal processes are 1) loss of activity by harvest and 2) leaching of radionuclides from the soil. Loss of activity by harvest models the amount of radionuclides taken up by vegetation while growing and assumes it is removed at harvest. For this study it was conservatively assumed that no activity was removed by harvesting. Fresh water from precipitation and irrigation can dissolve radionuclides in the root zone of the soil and transport them to a lower depth, where the activity will be unavailable for uptake by roots or resuspension into the air. The model used to estimate removal of radionuclides from the upper layer of soil assumes equilibrium between the pore water and soil. The partitioning coefficient, K_D, (i.e., distribution coefficient) describes the ratio of the concentration in soil to the concentration in water. This coefficient depends on a number of factors including the chemical natures of the soils and the radionuclide ions. Appropriate values for the radionuclides modeled were carefully studied and selected, as shown in Table 8-1 and described in Appendix C. Additional important variables in the model include the annual precipitation rate, the surface soil moisture content fraction, and the bulk soil density. The surface soil moisture content fraction was estimated to be 0.22 using characteristics for sandy loam (porosity of 0.4), a saturated hydraulic conductivity of 540 m/y, and an infiltration rate of 0.373 m/y. As with the soil concentration used for direct exposure, the soil depth was set to 15 cm and the bulk soil density set to 1.6 g/cm^3. Since the K_D changes for each chemical species, these data yield a removal rate constant for the activity of each radionuclide in the surface soil layer. This removal rate constant is used in addition to and in a manner similar to the radioactive decay constant to estimate the loss of radioactivity in the soil layer by leaching; this provides an estimate of the annual average radionuclide concentration in the surface soil layer.

Table 8-1 Soil Distribution Coefficients for Surface Soil Leaching Calculations

Nuclide	Kd (mL/g)	Nuclide	Kd (mL/g)
^{3}H	0	^{99}Tc	2.49*
^{32}P	173*	^{103,106}Ru	55
^{35}S	7.5	$^{129, 131}$I	1.55*
^{60}Co	60	$^{134, 137}$Cs	59
^{65}Zn	200	^{141,144}Ce	490
^{89,90}Sr	3040	^{231,234}Th†	3000
^{90}Y†	510	U (all isotopes)	1000
^{95}Zr	600	Pu (all isotopes)	4100
^{95}Nb	160	^{241}Am	2000

*This table lists the number of significant digits that were presented in the primary sources.
†These isotopes are daughters of the primary isotopes considered in the report.

8.2.4 Radionuclide Concentration in Shoreline Sediments – Direct Exposure

The concentration of radionuclides in shoreline sediments depends on the deposition of radionuclides from the adjacent contaminated body of water. The removal of radionuclides is considered to be limited to radioactive decay. As with other soil concentrations, the average concentration over a year is used to estimate doses. The mathematical model describing the concentration in sediments is very similar to the model for soil concentrations used for direct exposure. The key variable for this model, in addition to the decay constant for each radionuclide, is the deposition rate for sediments. The deposition rate is stated in terms of the transfer rate constant; for this study the transfer rate constant was set equal to the default value of 25,400 $L/m^2/y$ used in the GENII computer code (The original estimate had one significant figure, but three significant figures were retained by the GENII code to reflect the conversion from English to metric units and to allow trace back to the historical value). This value of the transfer rate constant was derived for several radionuclides by using measured values of concentrations in shoreline sediments and in the water column of the Columbia River. Two additional important variables determining the sediment concentration are the sediment density and the sediment depth; for this study the shoreline sediment density was set equal to the GENII code default of 240 kg/m^2 and the depth, as with other soil layers, was set equal to 15 cm.

8.3 Radionuclide Concentration in Terrestrial Vegetation

In general, contaminants may enter terrestrial vegetation by deposition on plant surfaces and by uptake through plant roots. Because the rate of contaminant entry into the plant is generally not affected by the concentration in the plant, concentration induced by direct deposition and by root uptake may be calculated separately. The total concentration of a radionuclide in a particular plant may then be calculated by summing the concentrations induced by direct deposition and by root uptake; since the mass of the plant is the same for both types of uptake, adding concentrations is equivalent to summing the radionuclide mass from each entry mechanism.

8.3.1 Plant Concentration from Direct Deposition

Deposition of radionuclides on the surfaces of plants (usually the leaves) can generally result from:

- Dry deposition from contaminated air.
- Wet deposition from contaminated air.
- Deposition of radionuclides resuspended from contaminated soil.
- Deposition from irrigation with contaminated water.

As explained elsewhere in this Section, irrigation with contaminated water was not considered a viable pathway. Dry and wet deposition from contaminated air is discussed in Section 8.2.1. Deposition of radionuclides resuspended from contaminated soil is discussed in Section 8.3.1.1. Once these three deposition rates [1), 2), 3)] have been determined, the radionuclide concentration in the vegetation is computed using a mass balance relationship; processes removing radionuclides from the plant surfaces include radioactive decay and weathering. The calculation of concentration in vegetation from direct deposition is discussed in Section 8.3.1.2.

8.3.1.1 Deposition of Resuspended Activity

Resuspension of radionuclides deposited on soil and plant surfaces causes an incremental addition to the concentration in the air above the affected surfaces. Radionuclides are resuspended by turbulence in the air and by mechanical agitation of the surface, e.g., by automobile traffic, pedestrian traffic, and

agricultural operations such as plowing, cultivating, and harvesting. For most studies of this type, the concentration of radionuclides in the air is considered to be in equilibrium with the surface concentration of radionuclides; i.e., the forces tending to resuspend activity are balanced by forces tending to cause the activity to settle on surfaces. For equilibrium conditions the relationship between air and soil concentration is given by:

$$C_{ar} = RF \cdot \Psi_S \qquad (8\text{-}2)$$

Where C_{ar} is the concentration induced in the air by resuspension (Bq/m^3);
RF is the resuspension factor, a constant, (m^{-1});
Ψ_s is the areal concentration of radionuclides in the soil (Bq/m^2).

The areal concentration may be obtained from the mass-based concentration, C_s, by multiplying by the bulk soil density, ρ_s, and soil depth, d_s:

$$\Psi_s = C_s \cdot \rho_s \cdot d_s \qquad (8\text{-}3)$$

The mass-based soil concentration, C_s (Bq/kg), is the average annual concentration obtained as described in Section 8.2.2. As with other cases involving the soil concentration, the soil depth was set to 15 cm and the bulk soil density set to 1.6 g/cm^3, so $\rho_s \cdot d_s$ has a value of 24 g/cm^2 or 240 kg/m^2.

Two separate values of resuspension factor were used in this study, one for farms and one for other environments. These values, representative of different land uses, were chosen from a compilation of measured resuspension factors (5). Because agricultural operations with heavy equipment, such as tractors, greatly disturbs the soil surface a resuspension factor value of 10^{-5} m^{-1} was chosen for agricultural exposure locations; this value is 100 times larger than the value of 10^{-7} m^{-1} chosen for urban, suburban, and non-agricultural rural exposure locations. Farming locations using the higher value of resuspension factor were taken to be: Girard (Rural Family #1), New Ellenton (Migrant Family), and Williston (Rural Family #2). All other exposure locations used the smaller value of resuspension factor.

Once the incremental addition to the concentration in the air above the affected surfaces is computed by equation (8-2), the deposition rate of this activity on plant surfaces is obtained from the product of the air concentration and a deposition velocity, similar to equation (8-1). The deposition velocity used for all radionuclides and all plants was chosen to be 0.001 m/s, which is a representative value.

8.3.1.2 Radionuclide Concentration in Plants from Direct Deposition

Radionuclide concentration in plants from direct deposition is calculated from a mass balance that considers radionuclide deposition from the air and removal by radioactive decay and weathering of the radionuclides from the plant surfaces. The net uptake of radionuclides is computed by integrating the uptake rate over the growing period for the particular crop. Radionuclide concentration is given by:

$$C_{dci} = [R_{aid} \cdot r_{dc} + R_{aiw} \cdot r_{dw} + C_{ci} \cdot RF_c \cdot V_{di} \cdot r_{ac}] \cdot [Tvc/Bc] \cdot [(1-\exp\{-\lambda_{ei} T_{gc}/365d/y\})/\lambda_{ei}] \qquad (8\text{-}4)$$

Where,

C_{dci} = concentration from deposition, d, of radionuclide i in crop type c;

R_{aid} = the rate of dry (d) deposition of radionuclide i from air (a);

R_{aiw}= the rate of wet (w) deposition of radionuclide i from air (a);

r_{dc} = the dry (d) deposition fraction for crop type c;

r_{dw} = the wet (w) deposition fraction for crop type c;

C_{ci} = the concentration of radionuclide i in the soil for crop type c;

RF_c = resuspension factor for the soil for crop type c;

V_{di} = deposition velocity for radionuclide i;

r_{ac} = the deposition fraction for resuspension for crop type c;

Tvc= the translocation factor for crop type c;

Bc = the standing biomass for crop type c;

$\lambda_{ei} = \lambda_{wi} + \lambda_i$ = effective loss rate contant (y-1), which is the sum of the weathering rate constant, λ_{wi}, and the radioactive decay constant, λ_i;

T_{gc} = the growing period for crop type c;

Growing periods for different types of crops are shown in Table 8-2. The dry and wet deposition rates are discussed in Section 8.2.1; deposition rates from resuspended activity are discussed in Section 8.3.1.1. Since plant surfaces do not generally cover the entire area subject to radionuclide deposition, a deposition fraction is applied to account for the fraction of the surface covered by vegetation; a standard value of 0.25 is used in this study for both dry and wet deposition calculations. Variables related to radionuclide removal from plants include the radioactive decay constant and the weathering constant. Radioactive decay constants are included in a data library in the GENII code. The weathering constant, which describes removal of radionuclides by precipitation, wind, and similar processes, is expressed as a weathering rate half-life; for this study a standard value of 14 days was selected for the weathering rate half-life.

Table 8-2 Values used for the point-estimate case for the variables: growing period (days), translocation factor, and standing biomass (kg/m2).

Crop Types	Growing Period (days)	Translocation Factor	Standing Biomass (kg/m^2)
Leafy vegetables	70	1	0.7
Root vegetables	70	0.1	0.7
Fruit and Grain	145	0.1	0.7
Poultry, Milk, and Egg Animal Feed	145	0.1	2.4
Beef and Milk Animal Forage	30	1	1.8

Although the radionuclides are absorbed through the plant surfaces, once inside the plant radionuclides migrate to different parts of the plant at different rates. Since the interest is in the edible portion of the crop, the fraction of absorbed radionuclides that migrate to that edible part, termed the "translocation factor", is an important quantity; the translocation factor has been measured for a variety of crops. Since the absorbed radionuclides spread throughout the plant, the concentration in the plant depends on the total biomass present; this is accounted for by the "standing biomass", which represents the total biomass per unit area of cultivated ground. Values of translocation factor and standing biomass used in this study for various crops are shown in Table 8-2.

8.3.2 Plant Concentration from Root Uptake

The plant concentration at harvest from root uptake is based on a radionuclide partitioning model that assumes equilibrium between the radionuclide concentration in the plant and the radionuclide concentration in the soil. The concentration of radionuclides in the plant is given by the following relation:

$$C_{rci} = [C_{ci} \cdot RP_{sc} \cdot Bv_{ci} \cdot fc]/P_3 \quad (8\text{-}5)$$

Where

C_{rci}	=	concentration of radionuclide i in crop type c from root uptake for a one-year period (Bq/kg wet weight);
C_{ci}	=	average concentration of radionuclide i in farmland soil for crop type c for the current one year period (Bq/m^2);
RP_{sc}	=	fraction of plant type c having roots in surface soil zone (dimensionless);
Bv_{ci}	=	concentration ratio for root uptake of radionuclide i in crop type c (Bq/kg dry plant per Bq/kg dry soil);
f_c	=	dry-to-wet ratio for plant type c (kg dry plant/kg wet plant);
P_3	=	areal soil density of farmland soil (kg/m^2).

The fraction of plant roots in the surface soil, RP_{sc}, was conservatively determined to be 1.0 for all plants, which indicates that the entire root system is considered to be in the soil zone where contamination is modeled to occur. Many crops have roots mainly in the surface soil zone. Assuming the entire root is in contaminated soil, when part may be in uncontaminated soil, will overestimate radionuclide uptake by the plant. Because this fraction was set to a value of 1.0, the fraction of the root below the surface soil (15 cm depth) was set to 0 in all cases. The areal density of farmland was set to 240 kg/m^2, consistent with values previously used for bulk soil density and soil depth. Values used for the concentration ratio for root uptake of radionuclide i in crop type c (Bq/kg dry plant per Bq/kg dry soil) are shown in Table 8-3. The source for these values is provided in Appendix E. The dry to wet ratio for various plant types is shown in Table 8-4.

A three-step process, shown in Figure 8.1, was used to select transfer factor values for this report (i.e., the concentration ratios shown in Table 8-3 and Table 8-5). The first step was to consider values based on local data. Where local data were not available, generic values were used. Among generic values, those that were applicable to conditions at the SRS were preferred; e.g., choosing an uptake factor of 1.7 for root vegetables, which was the average for sand and pH of 5, corresponding to conditions at the SRS. The first reference source for generic values was *Handbook of Parameter Values for the Prediction of Radionuclide Transfer in Temperate Environments* (6). Where (6) did not contain a generic value, the GENII default was used.

Table 8-3 Values of ratio of concentration in plants to concentration in soil (kg/kg) for various plant types and elements.

Element (i)	PLANT TYPE (c)			
	Cereal and Grain	Leafy Vegetables, Forage, and Hay	Other Vegetables and Root Vegetables	Fruit
P	3.5	3.5	3.5	3.5
S	1.5	1.5	1.5	1.5
Co	3.7E-03	0.20	0.11	7 E-03
Zn	1.6	3.3	12	0.9
Sr	0.15	1.7	1.7	0.2
Y	0.01	0.01	0.01	0.01
Nb	2.5 E-2	2.5 E-2	1.7E-02	2.5E-02

Element (i)	PLANT TYPE (c)			
	Cereal and Grain	Leafy Vegetables, Forage, and Hay	Other Vegetables and Root Vegetables	Fruit
Zr	1E-03	1E-03	1E-03	1E-03
Tc	0.73	940	28	1.5
Ru	5E-03	0.2	0.04	0.04
I	2E-02	3.4E-03	0.02	0.02
Cs	0.02	5.31	0.9	0.22
Ce	3E-02	3E-02	3E-02	3E-02
Th	3.4E-05	1.1E-02	6.9E-03	2.5E-04
U	1.3E-03	2.3E-02	0.011	4 E-03
Pu	6E-05	2.2E-03	8.2E-04	4.5E-05
Am	2.2E-05	0.067	8.4E-04	2.5E-04

Table 8-4 Variable values for the dry-to-wet ratio for plant type c (kg dry plant/kg wet plant).

Crop Types (c)	Ratio of Dry to Wet Weight
Leafy vegetables	0.1
Root vegetables and Fruit	0.15
Grain	0.91
Poultry and Egg Animal Feed	0.91
Beef and Milk Animal Forage	0.22

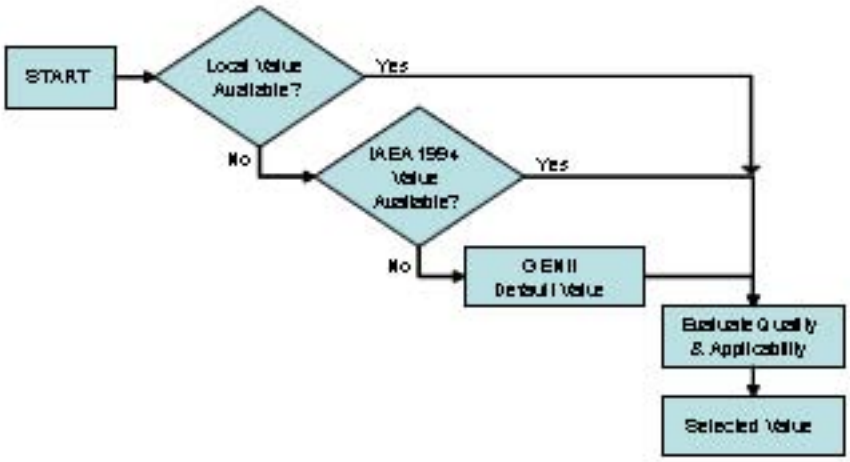

Figure 8-1 Process for Selecting Transfer Factor Values

8.4 Radionuclide Concentration in Terrestrial Animals

The concentration of radionuclides in food products from terrestrial animals (e.g., eggs, milk, and beef) depends on the amount of radionuclides ingested by those animals. In general, animals may ingest contaminated water, soil, and feed (food). For this study drinking water for either animals or humans was not considered to be contaminated in the vicinity of the SRS. This is because water contaminated with liquid releases from the SRS was not used for such purposes, while the water that was used was likely to be uncontaminated (well water) or only slightly contaminated (reservoirs and ponds). Consequently, uptake of radionuclides by terrestrial animals from drinking water was not modeled in this study. Because ingestion of soil was not considered to be a significant pathway for animal product contamination, it was not modeled in this study.

For ingestion of feed as the viable pathway for radionuclide ingestion, the concentration of radionuclides in animal products is given by equation (9.9) in the GENII SDD (1) and which is adapted here:

$$C_{hai} = F_{ai} \cdot \sum_{f=1}^{N_{af}} C_{cfi} d_{af} U_{af} \qquad (8\text{-}5)$$

Where,

C_{hai} = concentration of radionuclide i in animal product a at harvest of the animal product for a one-year period (Bq/kg);

F_{ai} = transfer coefficient that relates daily intake rate by an animal to the concentration in an edible animal product a (e.g., Bq/(L milk) per Bq/d for milk, and Bq/(kg meat) per Bq/d for beef);

C_{cfi} = concentration of radionuclide i in animal feed type f at the time of consumption for a one-year period (Bq/kg wet weight);

N_{af} = number of feed types, f, fed to animal type a;

d_{af} = fraction of animal type a feed type f intake that is contaminated (dimensionless);

U_{af} = daily feed intake rate for animal type a of feed type f (kg/d).

The calculation of the concentration in animal feed grown in the vicinity of the SRS has been discussed in Section 8.3. Five types of animal feed were considered for this study: poultry, milk, and egg animal feed and beef and milk animal forage. Although beef animal feed, in general, is a possibility, site specific information indicated that cattle farmers near the SRS used forage exclusively. Table 8-5 shows values for each feed type for d_{af} (the fraction of feed type f intake that is contaminated) and U_{af} (daily feed intake rate for feed type f (kg/d)). According to Hamby 1991 (7): "...Chickens are housed in covered shelters and eat feed provided by the parent companies responsible for marketing the final product." This reflects conditions at the time of the 1989 survey, so a value of zero for the contaminated fraction of poultry feed is indicated and the poultry and egg pathways would be eliminated. However, because at least one CDC scenario posits "backyard chickens" and because agricultural practices may have changed over the time period of the study, a higher value (contaminated fraction = 0.5) is assumed for the exposure scenarios. Table 8-6 shows the values of the transfer factors, F_{ai}, for the various radionuclides and the four animal types considered. Ingestion of soil by animals was considered to have minor potential for transfer of radionuclides to humans, so it was not considered.

Table 8-5 Values used for the point-estimate case for the variables: fraction of feed that is contaminated and daily feed intake rate (kg/d)

Feed Types	Fraction Contaminated	Feed Intake Rate (kg/d)
Poultry Animal Feed	0.5	0.12
Milk Animal Feed	1.0	13
Egg Animal Feed	0.5	0.12
Beef Animal Forage	1.0	36
Milk Animal Forage	1.0	29

Table 8-6 Values of transfer factors used for the point estimate case; i.e., the ratio of concentration in animal products to daily rate of intake of radionuclides

Element (i)	ANIMAL PRODUCT (a)			
	Animal Milk (kg/L)	Beef Animal Meat (kg/kg)	Poultry (kg/kg)	Egg (kg/kg)
P	1.6E-02	5E-02	0.19	1.0
S	1.6E-02	2E-01	2.3	7.0
Co	3E-04	1E-02	2	0.1
Zn	0.01	0.1	7	3
Sr	2.8E-03	8E-03	0.08	0.2
Y	2E-05	1E-03	.01	.002
Nb	4.1E-07	3E-07	.0004	.001
Zr	5.5E-07	1E-06	6E-05	.0002
Tc	2.3E-05	1E-04	0.03	3
Ru	3.3 E-06	0.05	8	.005
I	0.01	0.04	0.01	3
Cs	7.9E-03	0.05	10	0.4
Ce	3E-05	2E-05	.003	6.5E-05
Th	5E-06	4E-05	.006	.004
U	4E-04	3E-04	1	1
Pu	1.1E-06	1E-05	.003	.0005
Am	1.5E-06	4E -05	.006	.004

8.5 Radionuclide Concentration in Aquatic Animals

Uptake of radionuclides by aquatic animals can be complex because these animals eat other organisms that are contaminated and may take up radionuclides directly from the water they inhabit. For fish, which is an important human food, the uptake of radionuclides is generally simplified. The simplified model states that the radionuclide concentration in a given type of aquatic food is equal to the product of the

radionuclide concentration in water and a bioaccumulation factor, which is specific for the organism and radionuclide. This simplified approach, which is implemented in the GENII computer code, is stated by the equation:

$$C_{hqi} = C_{wi} \cdot B_{qi} \qquad (8\text{-}6)$$

Where,

C_{hqi} = concentration of radionuclide i in aquatic food type q at the time of harvest (Bq/kg);

C_{wi} = average concentration of radionuclide i in water over the year;

B_{qi} = bioaccumulation[2] factor for radionuclide i in aquatic food type q (Bq/kg in wet fish per Bq/L of water).

The concentration in water at the two water exposure locations used in the study is obtained as described in Chapter 7. The bioaccumulation factors for freshwater fish that have been used in this study are presented in Table 8-7; Appendix F contains a description of how these were obtained. Some are generic values, but several (marked with "‡") are specific to the SRS site.

Table 8-7 Bioaccumulation Factors Selected for Freshwater Fish Consumption (L/kg)

Element*	Factor	Element*	Factor
P	50,000†	Ru	10†
S	800†	I	40†
Co	300†	Cs	4,700‡
Zn	1,000†	Ce	30†
Sr	450‡	Th	100†
Y	30†	U	10†
Nb	300†	Pu	4,700‡
Zr	300†	Am	2,400‡
Tc	20†		

*The same factor is used for each isotope of an element.
†International Atomic Energy Agency (IAEA) default value based on several references (6).
‡Selected value calculated from data in (8), or from a combination of data from (8) and (6).

8.6 Effect of Delay and Storage Times on Concentrations

The expressions for radionuclide concentrations in plants, terrestrial animals, and aquatic animals presented respectively in Sections 8.2, 8.3, and 8.4 are correct for the time of harvest or collection. However, the consumption of these foods, by either humans or animals, may be delayed. Animal foods, such as forage or feed, may be stored after harvest and fed to the animals at a later time; during storage radionuclides will continue to undergo radioactive decay, which results in lower concentrations in the foods when they are consumed. Similarly human foods, such as vegetables, slaughtered meat, fish, and

[2] Some authors reserve the term "bioaccumulation" for processes in which uptake of contaminants is from both water and food, while the term "bioconcentration" is used to describe uptake only from water (2). The concentration in fish, as stated in equation (8-6), depends only on the water concentration. However, the coefficient, B_{qi}, may represent uptake from both food and water, depending upon how it was measured.

milk, may be delayed getting to market and table, because the food must be processed, or transported, or both. Again radioactive decay will reduce the radionuclide concentration in the foods consumed.

The concentration of the food consumed is given by the following expression:

$$C_{efi} = C_{hfi} \cdot \exp\{-\lambda_i T_d\} \qquad (8\text{-}7)$$

Where,

C_{efi} = the concentration in animal or human food at the time it is consumed;

C_{hfi} = the concentration in animal or human food at the time it is harvested;

λ_i = radioactive decay constant for radionuclide i in units commensurable with T_d;

T_d = the storage time for animal feed or the delay time for human food.

Radionuclide concentrations in animal and human food are derived according to the methods described in the three sections preceding this one. Radioactive decay coefficients are contained in a library file in the GENII code. Storage times for animal foods are listed in Table 8-8. These storage times were based on either generic values or site specific information (7), as explained and referenced in Appendix F. Both beef and milk animals were allowed to forage all year long, so there was never any storage time associated with this type of animal food.

Table 8-8 Values used for the point-estimate case for the storage time for animal foods

A value for each animal feed type (f) used is shown.

Feed Types	Index (f)	Storage Time (d)
Poultry Animal Feed	2	180†
Milk Animal Feed	3	90‡
Egg Animal Feed	4	180†
Beef Animal Forage	5	0
Milk Animal Forage	6	0

†GENII default value
‡Value from Hamby (7)

Delay times between food product harvest and consumption are listed in Table 8-9 (plant products) and Table 8-10 (animal products). These delay times were based on a combination of generic and site specific data, as explained and referenced in Appendix F. In addition, the characteristics stated for the scenarios were used to interpret this source data and obtain values appropriate for this study. For example, longer delay times were assumed for persons living in cities or towns than for farmers or persons eating food grown in their own gardens or raised in their backyards. Three families consumed fish obtained from waters contaminated by liquid releases from the SRS: the Outdoors Person Family, Family Living Near the River, and Delivery Person Family; the delay time for fish consumed by these receptors was taken to be one day. Fish consumed by other families was considered to be uncontaminated, because the waters they fished were not contaminated by liquid releases from the SRS.

Table 8-9 Delay Times for Consumption of Plant Products (days)

Location	Leafy Vegetables	Root Vegetables	Fruit	Grain
Girard	1	14	1	1
Waynesboro	NA*	14	NA	NA
Augusta	7	14	7	7
Jackson	1	14	1	1
New Ellenton	1	14	1	1
Barnwell	7	14	7	7
Martin	1	14	1	1
Allendale	NA	14	NA	NA
Williston	1	14	1	1
Onsite	NA	14	NA	NA

*NA – not applicable.

Table 8-10 Delay Times for Consumption of Terrestrial Animal Products (days)

Location	Beef	Poultry	Milk	Eggs
Girard	6	6	3	1
Waynesboro	NA*	NA*	NA*	NA*
Augusta	6	6	3	7
Jackson	6	6	3	1
New Ellenton	6	6	3	1
Barnwell	6	6	3	7
Martin	6	6	3	1
Allendale	NA‡	NA‡	NA‡	NA‡
Williston	6	6	3	1
Onsite	NA‡	6	NA‡	NA‡

*NA – not applicable; location for school only.
‡NA – not applicable; location for work only.

8.7 Special Models for Tritium and Carbon-14

The models describing uptake of radionuclides by vegetation and animals presented in Section 8.3 and 8.4 are largely based on an assumption that the radionuclides are trace elements in the plant and animal tissues; i.e., the concentrations of radionuclides and non-radioactive isotopes of the same element in the organism are small. Generally this is the case and the models are appropriate. However, for two important radionuclides, tritium and carbon-14, this assumption is not true. In the environment, carbon-14 behaves much like its non-radioactive, more common isotope carbon-12. Similarly tritiated water, with each water molecule containing either one tritium atom and one normal hydrogen atom or two tritium atoms, behaves like normal water in the environment. A principal component of plant and animal

tissue is carbon and both plants and animals contain significant percentages of water (plant tissue is usually 75% or higher water by weight).

The GENII code has incorporated special models for plant uptake of tritium and carbon-14, as described in Section 9.6 of the GENII SDD (1):

The concentrations of tritium or carbon-14 in environmental media (soil, plants, and animal products) are assumed to be related to the specific activity (Becquerels of radionuclide per kilogram of soluble element) in the contaminating medium (air or water). The fractional content of hydrogen or carbon in a plant or animal product is then used to compute the concentration of tritium or carbon-14 in the food product under consideration. The hydrogen contents in both the water and the non-water (dry) portion of the food product are used when calculating the tritium concentration. The creation of organically-bound tritium [OBT] in plant and animal products from intake of HTO [tritiated water] is also addressed.

The model for tritium also considers tritium released in elemental form. Further details of these special models may be found in the cited reference.

Because of the specialized nature of these models, the default values for various coefficients built into the GENII code were used. Until the results of this study were evaluated to estimate the significance of doses from tritium, it was not considered appropriate to evaluate whether site-specific characteristics warranted changes in these values or if any site-specific data to support such changes were available. Nevertheless, a few variables used in these models were specifically selected for this study.

The tritium model for uptake by plants has as a key parameter the absolute humidity of the air; this is because the relative fraction of tritiated water to normal water in the air is given by the ratio of the tritium concentration to the absolute humidity. The value selected for the point estimate case is a site-specific average over 42 years and has a value of 0.01125 kg/m3, with a standard deviation of 0.00053 kg/m3 (9). Tritium concentrations in animals are based on their uptake of tritium from contaminated water and food. Since the water consumed by livestock was considered to be uncontaminated (as explained elsewhere), the fraction of contaminated water was set to zero, which meant the uptake from water was zero. However, as explained in Section 8.4, livestock did consume contaminated crops; the quantities of crops consumed and fractions contaminated specified in Section 8.4 were also employed in the tritium model.

A key variable in determining the uptake of carbon-14 by plants from the atmosphere is the ratio of carbon-14 to normal carbon. The concentration of carbon-14 in the vicinity of the SRS is calculated according to the approach described in Chapter 5; the concentration of normal carbon in the atmosphere is based on a nominal value, which is built-into the code.

8.8 References

1. Napier, B.A, et al. (2002, November). GENII Version II Software Design Document. PNNL for U.S. Environmental Protection Agency.

2. Hemond, Fechner-Levy, H.F. & Fechner-Levy, E.J. (2000). Chemical Fate and Transport in the Environment. ISBN 0-12-340275-1. Academic Press. New York.

3. National Climatic Data Center (2003). National Oceanographic and Atmospheric Administration. Normal Monthly precipitation (Inches). [cited 28 June 2004] Available from URL: http://www.ncdc.noaa.gov/oa/climate/online/ccd/nrmlprcp.html.

4. Napier, B.A. (2004, October). GENII Version 2 Users' Guide. PNNL-14583. Pacific Northwest National Laboratory. Richland, WA.

5. Kennedy, W.E. & Strenge, D.L. (1992, October). Residual Radioactive Contamination from Decommissioning, Technical Basis for Translating Contamination Levels to Annual Total Effective Dose Equivalent, Final Report. NUREG/CR-5512, Volume 1, PNL-7994.

6. International Atomic Energy Agency (IAEA) (1994). Handbook of Parameter Values for the Prediction of Radionuclide Transfer in Temperate Environments. Technical Reports Series No. 364. Vienna, Austria.

7. Hamby (1991, March 1). Land and water use characteristics in the vicinity of the Savannah River Site. WSRC-RP-91-17. Westinghouse Savannah River Company. Aiken, South Carolina.

8. Friday, G.P., Cummins, C.L., & Schwartzman, A.L. (1996). Radiological Bioconcentration Factors for Aquatic, Terrestrial, and Wetland Ecosystems at the Savannah River Site (U). Aiken, SC, Westinghouse Savannah River Company Report: WSRC-TR-96-0231.

9. Hamby, D.M. (1993, July). A Probabilistic Estimation of Atmospheric Tritium Dose. Health Physics; 65(1):33-40.